© Siemens AG 2025

Overview

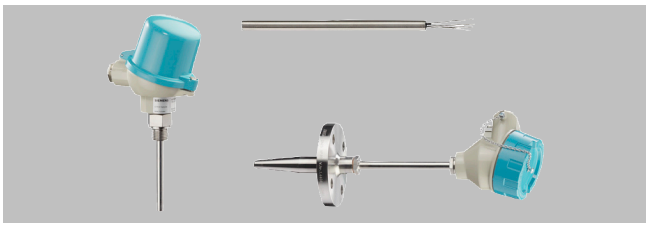

The temperature sensors of the SITRANS TS product family are used for measuring temperatures in industrial plants.

Siemens offers the following temperature sensors:

- SITRANS TS200 Compact
  - General use
  - Compact design with plug/wire ends
  - Optionally with M12 extension cable
- SITRANS TS200 IO-Link
  - General use
  - Particularly suitable for use in automated industrial plants
- SITRANS TS300
  - Use in food, pharmaceuticals and biotechnology
  - Modular or clamp-on design
- SITRANS TS500
  - General use
  - Modular design with connection head and thermowell

Benefits

The modular design makes it possible to customize the temperature sensor for most applications, while still being able to use many standardized individual components.

Application

Depending on the specification, sensors can be combined with different connection heads, extensions (neck pipe) and process connections. As a result, the sensors can be used in a large number of technical applications, e.g. in the following industries:

- Chemical industry
- Petrochemical industry
- Power engineering
- Basic material industry
- Pharmaceutical industry
- Biotechnology
- Food manufacturing

SITRANS TS200 Compact

The temperature sensors in the SITRANS TS200 series of compact thermometers are characterized by their compact design. They are suitable for the following:

- Measurements of temperatures of solids, where additional thermowells are not required for replacements done during ongoing operations, e.g. bearing bracket temperature.
- Measurements which are particularly critical with regard to response times. The advantages offered by an additional thermowell are intentionally omitted.
- Measuring points which must be easy to convert or relocate.
- Surface temperature measurements: The temperature sensor is used in conjunction with a surface connection piece.
- Cost-effective transport: The mineral-insulated design of the sensors allows for economical transport even over large lengths. As of a length of 0.8 m, the sensors can be delivered rolled or bent.
- Optional M12 extension cables create a solution that, unlike cable sensors such as the earlier SITRANS TS100, has the advantage of being disconnectable for recalibration, for example. The connecting cable can stay where it is.

SITRANS TS200 IO-Link 7MC7216

This temperature sensor is particularly suitable for use in automated industrial plants in areas such as HVAC (heating, ventilation and air-conditioning), industrial cooling systems, agriculture and animal husbandry, meteorology, etc.

- Choice of three operating modes for device configuration:
  - IO-Link
  - 4 ... 20 mA loop-powered (passive system)
  - Output for alarm thresholds (SIO).
- Support for two-way SDCI (Single Drop Communication Interface) data transmission.
- Exchange of process data, parameters, diagnostics information and status messages via the IO-Link interface; any IO-Link Master can be used for the configuration.
- Use of the device as a programmable thermostat thanks to the SIO operating mode with configurable NPN or PNP output
- LED indicator to indicate the operating status: IO-Link and SIO modes.

© Siemens AG 2025

Application (continued)

- Variants optionally available with a plastic (PA6) or (AISI 316L) stainless steel enclosure

SITRANS TS300 temperature sensors for food, pharmaceuticals and biotechnology

The temperature sensors of the SITRANS TS300 series are thermometers especially designed for measurements with high hygienic demands, such as in the food, pharmaceutical and biotechnology industries. The basic versions are:

- Thermometers in modular design with replaceable measuring insert and process connections usual in the industry
- Clamp-on thermometers for measurement of the pipe surface temperature without interrupting the process

SITRANS TS500 temperature sensors as a module system

Due to their modular design, temperature sensors of the SITRANS TS500 series are well suited to a large number of applications.

The replaceable measuring insert makes it possible to conduct maintenance work even during ongoing operations. These devices are used particularly frequently in pipes and vessels in the following industries:

- Power stations
- Chemical industry
- Petrochemical industry
- General process engineering
- Water, waste water

© Siemens AG 2025

Design

SITRANS TS200 Compact 7MC72xx

The following figure shows the available versions of SITRANS TS200 temperature sensors.

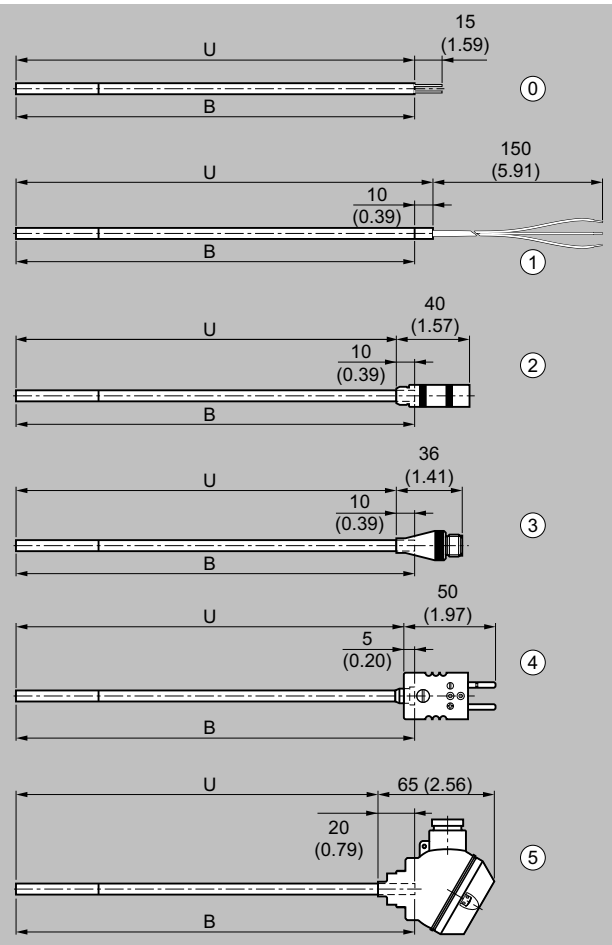

B Measuring insert length
H Head height
U Insertion length

			IP level sensor	IP level terminals
0	Basic sensor	U = B	IP65	IP00
1	Flying leads	U = B + 10 (0.39)	IP65	IP00
2	LEMO coupling 1S	U = B - 10 (0.39)	IP65	IP50
3	M12 device plugs	U = B - 10 (0.39)	IP65	IP54
4	Thermocouple coupling	U = B - 5 (0.20)	IP65	IP20
5	Mini connection head	U = B - 20 (0.79)	IP65	IP65

SITRANS TS200, dimensions in mm (inch)

The following types of process connections can be implemented:

- Compression fitting
- Spring-loaded compression fitting
- Soldering nipple
- Direct soldering/welding in

SITRANS TS200 IO-Link 7MC7216

The following figure shows the available versions of SITRANS TS 4...20 mA/IO-Link temperature sensors.

© Siemens AG 2025

Design (continued)

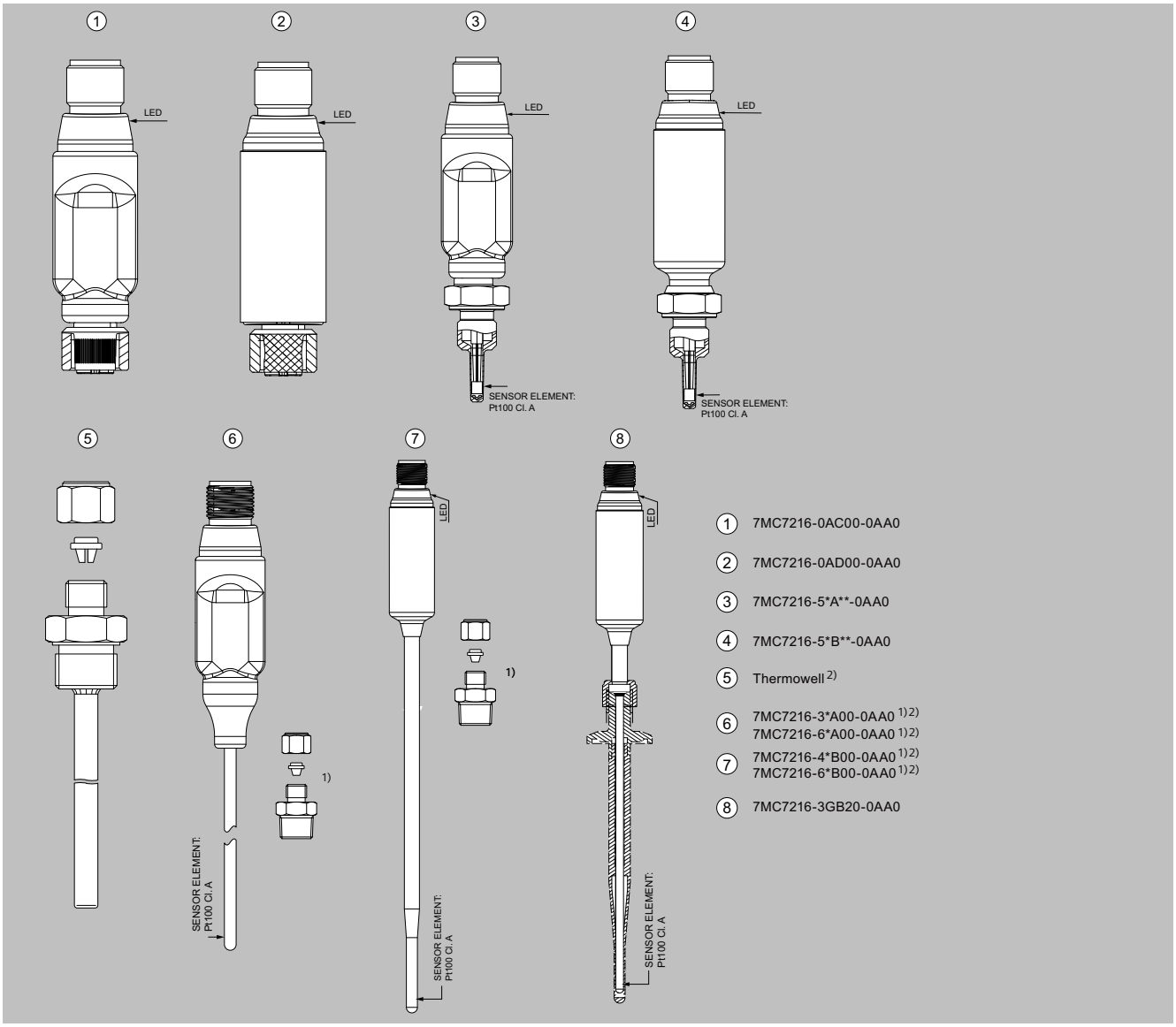

SITRANS TS200 IO-Link, comparison of connections: For dimensions, see the dimensional drawings at SITRANS TS200 IO-Link/stainless steel enclosure or plastic enclosure.

1) Optional compression fitting; see "SITRANS TS200 compression fittings"
2) Optional thermowells; see "SITRANS TS200 thermowell"

The following variants are available for IO-Link:

7MC7216-0AD00-0AA0

- Metal enclosure (steel AISI 316L)
- Operational range -40 ... 80 °C (-40 ... 176 °F)
- Measuring range of the input sensor: -200 ... 800 °C (-328 ... 1472 °F)
- Connection of an external PT100/PT1000 input sensor via M12 connection socket

7MC7216-**B00-0AA0

- Metal enclosure (steel AISI 316L)
- Operational range -40 ... 80 °C (-40 ... 176 °F)
- Measuring range of the input sensor: -50 ... 350 °C (-58 ... 662 °F)
- The sensor element is installed in the tip of the shank
- The shank (pipeline made of AISI 316L steel) CANNOT be bent

© Siemens AG 2025

Design (continued)

- PT100 Kl. Output bit temperature sensor with optimized response time, variable sensor lengths and integrated process connection
  - Sensor diameter 6 mm
  - Sensor diameter 6 mm tapered to 4.4 mm for optimized response times

7MC7216-5*B**-0AA0

- Metal enclosure (steel AISI 316L)
- Operational range of cylindrical section -40 ... 80 °C (-40 ... 176 °F)
- Measuring range of the input sensor: -50 ... 120 °C (-58 ... 248 °F)
- Suitable für measurements in liquid; not recommended for measurements in air
- If intended to be installed in a pipe, the ideal immersion length is half the pipe diameter
- Max. operating pressure (in relation to sensor length L 13/24 mm): PN 100 BAR
- In the case of cylindrical threads, the use of a thread sealing compound or seal is recommended
- PT100 Kl. Output bit temperature sensor with fast response time, short sensor lengths and integrated process connection
  - Sensor diameter 3.5 mm tapered to 3 mm for faster response times

7MC7216-3*B**-0AA0

- Metal enclosure (steel AISI 316L)
- Operational range of cylindrical section -40 ... 80 °C (-40 ... 176 °F)
- Measuring range of the input sensor: -50 ... 350 °C (-58 ... 662 °F)
- PT100 Kl. Output bit temperature sensor with fast response time, variable sensor lengths and integrated protective tube connection
  - Sensor diameter 3 mm

7MC7216-0AC00-0AA0

- PA6 plastic enclosure
- Operational range -40 ... 70 °C (-40 ... 158 °F)
- Measuring range of the input sensor: -200 ... 800 °C (-328 ... 1472 °F)
- Connection of an external PT100/PT1000 input sensor via M12 connection socket

7MC7216-**A00-0AA0

- PA6 plastic enclosure
- Operational range -40 ... 70 °C (-40 ... 158 °F)
- Measuring range of the input sensor: -50 ... 350 °C (-58 ... 662 °F)
- The sensor is flexible: The bending radius must not be less than 3 times the sensor diameter, with the exception of the sensitive end piece, which cannot be bent over a length of ~ 30 mm
- The sensor element is installed in the tip of the shank
- To ensure correct temperature measurement, the immersion depth of the shaft in the process must be at least 6 times the diameter
- Max. operating pressure (in relation to sensor length): PN 100 BAR
- PT100 Kl. Output bit temperature sensor with variable sensor lengths
  - Sensor diameter 6 mm
  - Sensor diameter 3 mm for faster response times

7MC7216-5*A**-0AA0

- PA6 plastic enclosure
- Operational range -40 ... 70 °C (-40 ... 158 °F) in IO-Link operating mode
- Measuring range of the input sensor: -50 ... 110 °C (-58 ... 230 °F)
- Suitable für measurements in liquid; not recommended for measurements in air
- If intended to be installed in a pipe, the ideal immersion length is half the pipe diameter
- Max. operating pressure (in relation to sensor length L 13/24 mm): PN 100 BAR
- In the case of cylindrical threads, the use of a thread sealing compound or seal is recommended
- PT100 Kl. Output bit temperature sensor with fast response time, short sensor lengths and integrated process connection
  - Sensor diameter 3.5 mm tapered to 3 mm for faster response times

SITRANS TS300

SITRANS TS300 modular design

The resistance thermometer is intended for installation in vessels and pipes for hygienic requirements.

- Modular design consisting of thermowell, measuring insert, connection head and optional transmitter for replacement during operation
- Hygiene version, design according to recommendations of the EHEDG
- Transmitter can be integrated (4 to 20 mA, HART, PROFIBUS PA)

The following figure shows the available versions and components of SITRANS TS300 temperature sensors in modular design.

© Siemens AG 2025

Design (continued)

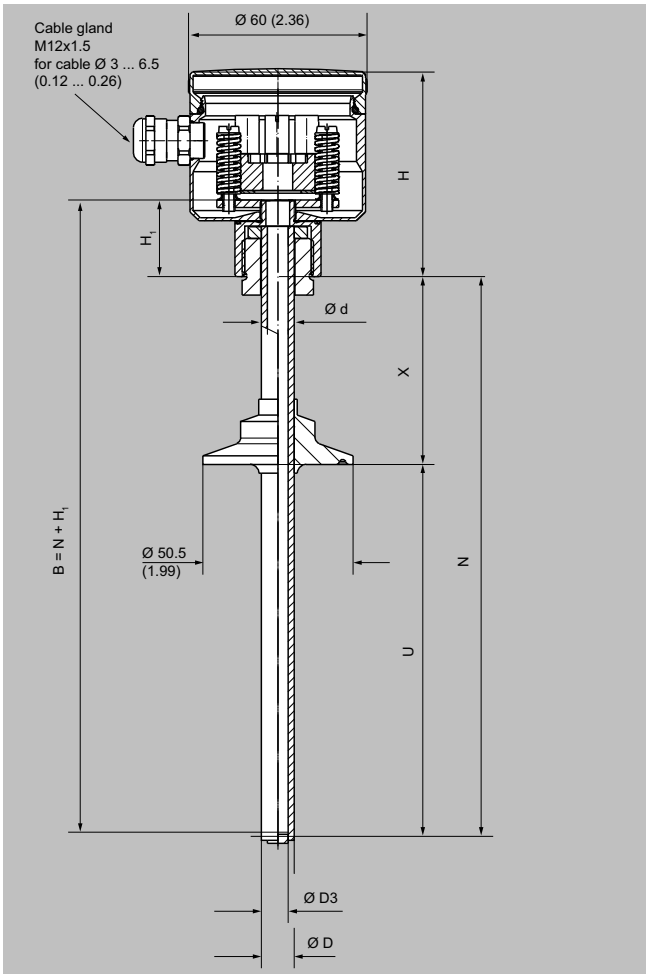

B	Measuring insert length
Ød	Measuring insert outer diameter (6 (0.24))
ØD	Process connection outer diameter
ØD3	Thermowell inner diameter
H	Head height
H_1	Type Axx = 41 (1.61) Type Bxx = 26 (1.02)
N	Nominal length
U	Insertion length
X	Extension length

SITRANS TS, temperature sensors, TS300 modular design, dimensions in mm (inch)

The measuring insert contains a special temperature sensor made of silver that is constantly pressed onto the pipe by a spring.

A positively driven operation of the replaceable measuring insert ensures a constant fit on the pipe and thus provides for a reproducible measuring result.

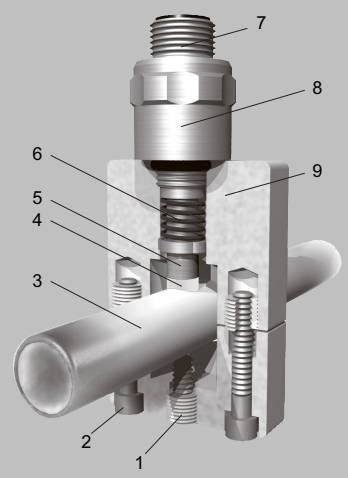

1 Vibration-locking-screw
2 Mounting screws
3 Process pipeline
4 Temperature sensor
5 Thermal decoupling
6 Spring load
7 Electrical connection M12
8 Replaceable measuring insert
9 Heat insulated pipe collar

SITRANS TS300 Clamp-on

The temperature is recorded via a modified, fast response Pt100 measuring element that is positioned and insulated by a pipe collar made of temperature-resistant plastic.

Structural design	
Measuring insert	• Special measuring insert made of stainless steel; hygienic design • Measuring element made of silver; thermal decoupling by plastic insert Measuring insert screwed into collar with spring tension. Use thermo-lubricant (see accessories) prior to mounting the device.
Pipe collar	• Collar made from temperature-resistant, high-performance plastic with integrated insulation system in hygienic design • Ambient temperature influence: Approx. 0.2%/10 K

© Siemens AG 2025

Design (continued)

The pipe diameter of the measuring pipe is required for correct device selection. For special sizes, you start by selecting the appropriate collar size and entering the desired size in plain text. Space-saving designs (clamping bracket version) are available optionally for installation in restricted spaces (e.g., pipe bundles).
For correct assignment after recalibration, the collar as well as the measuring insert are marked with the serial number and pipe diameter. This information can also be engraved.

The following figure shows the available versions and components of SITRANS TS300 temperature sensors in clamp-on design:

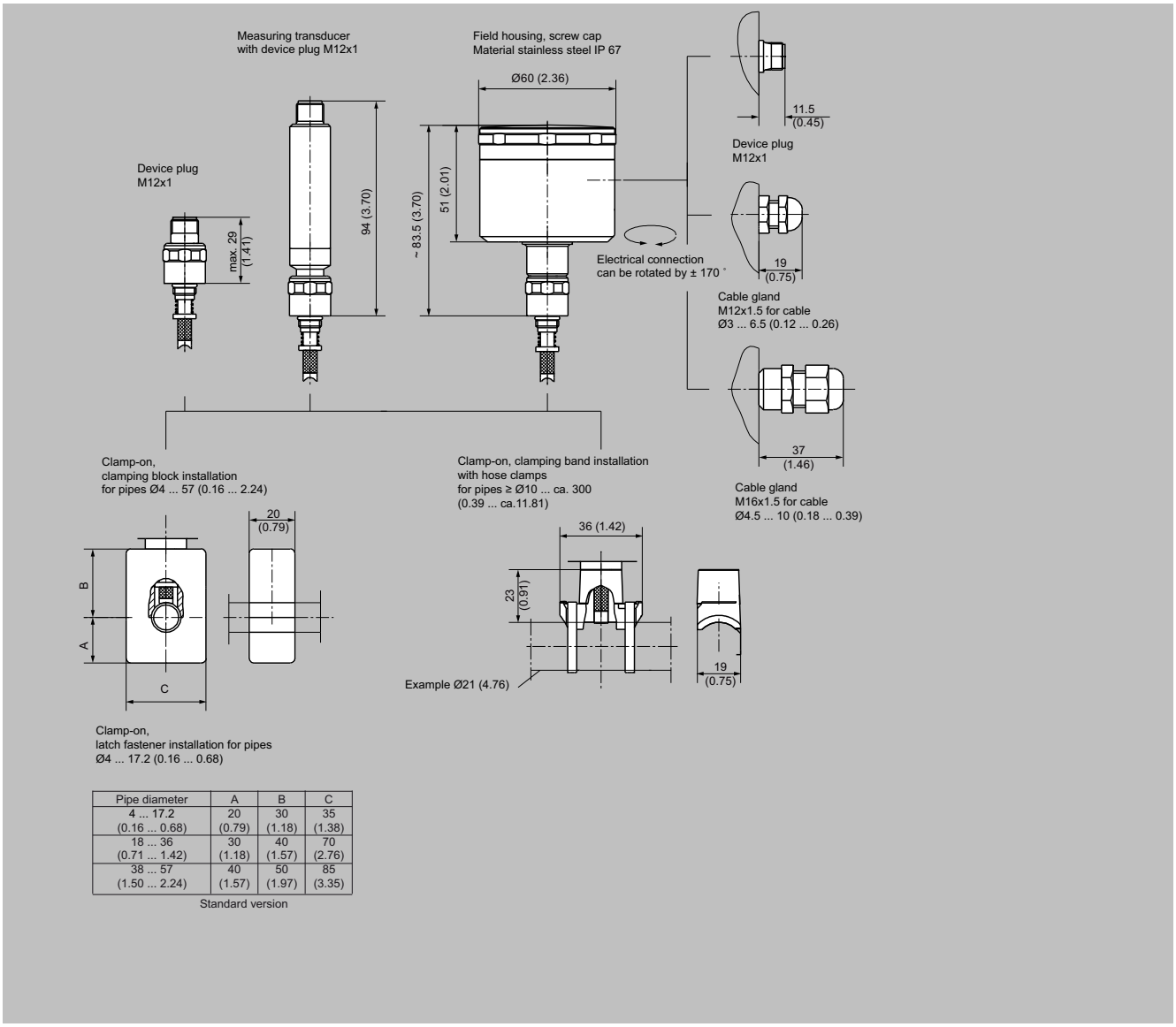

Pipe diameter	A	B	C
4 ... 17.2 (0.16 ... 0.68)	20 (0.79)	30 (1.18)	35 (1.38)
18 ... 36 (0.71 ... 1.42)	30 (1.18)	40 (1.57)	70 (2.76)
38 ... 57 (1.50 ... 2.24)	40 (1.57)	50 (1.97)	85 (3.35)

Standard version

SITRANS TS300 clamp-on design, device plug, field enclosure, cable gland, variants, dimensions in mm (inch)

SITRANS TS500 7MC75xx

The following figure illustrates the available designs and components for SITRANS TS500 temperature sensors:

© Siemens AG 2025

Design (continued)

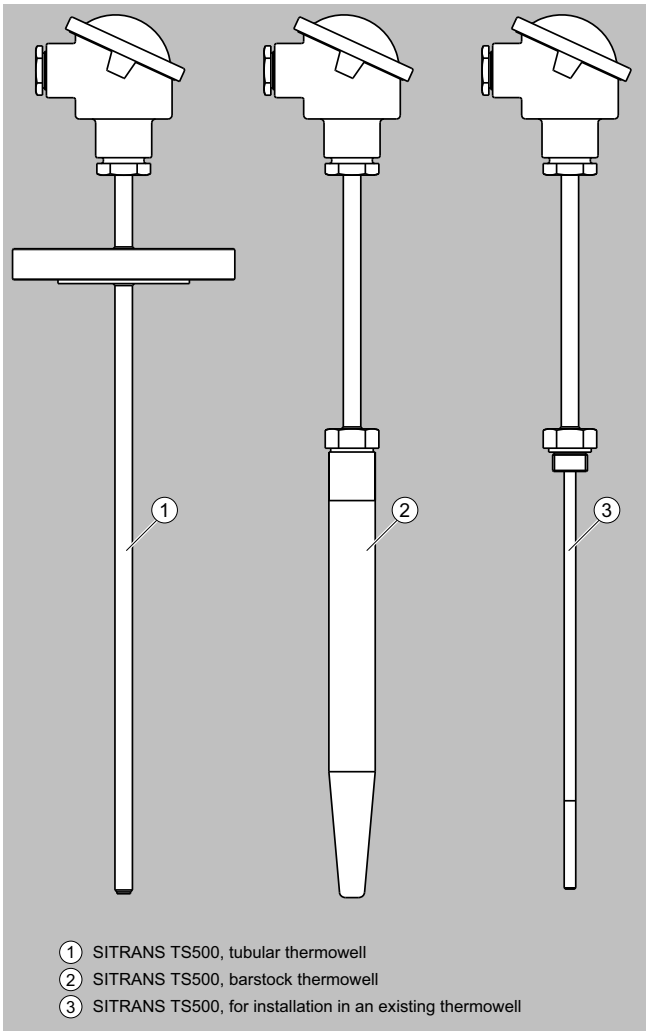

SITRANS TS500 temperature sensors; the IP degree of protection depends on the connection head

The temperature sensors of the SITRANS TS500 series are available in three different versions:

Version	Description	Application	Process connection
1	• Tubular thermowell • Thermowell and extension made from a pipe; closed at tip with welded-in base plug	Minimal to medium process requirements	• Connection with thread or flange • Thread is welded on, or compression fitting
2	• Barstock thermowell • Barstock thermowell, tubular extension; extension screwed into thermowell	Medium to extreme process requirements	• Directly welded into pipe • With welded-on flange • With external thread
3	• For installation in existing thermowell • Tubular extension	Process requirements depending on the thermowell design	Screwed into an existing thermowell

© Siemens AG 2025

Function

A complete measuring point consists of a measuring insert which contains the basic sensors, the protective fitting and an optional measured value processor (transmitter).

Basic sensors

Basic sensors are:

- Resistance thermometers:
  Temperature measurement is based on the temperature dependency of the installed measurement resistance.
- Thermocouples:
  Temperature measurement is based on the Seebeck effect. A thermocouple which subjected to a temperature drop produces thermoelectric voltage that can be measured.

Transmitters

The optional Siemens transmitters assume the following functions:

- Optimum measurement processing
- Strengthening of weak sensor signals directly on site
- Transmit standardized signals
- Protect against electromagnetic interspersion
- Option to conduct measuring point diagnostics

© Siemens AG 2025

Configuration

Components: Process connections

This catalog is limited to the standard versions. Special designs are available on request. The technical specifications are provided to assist the user. It is the responsibility of the ordering party to make the correct selection of suitable devices.

Welding in

The welding in of the thermowell provides a permanent, secure and highly resilient process connection, assuming a respective welding quality.

It is not possible to accidentally open the process connection. Additional gaskets are not required. If the pipe is not thick enough to ensure a secure welded joint, appropriate weld-in sockets are used. With weld-in sockets in suitable length, it is also possible to standardize a plant's measuring points to a large extent. Stocks of spare parts can therefore be reduced to a minimum.

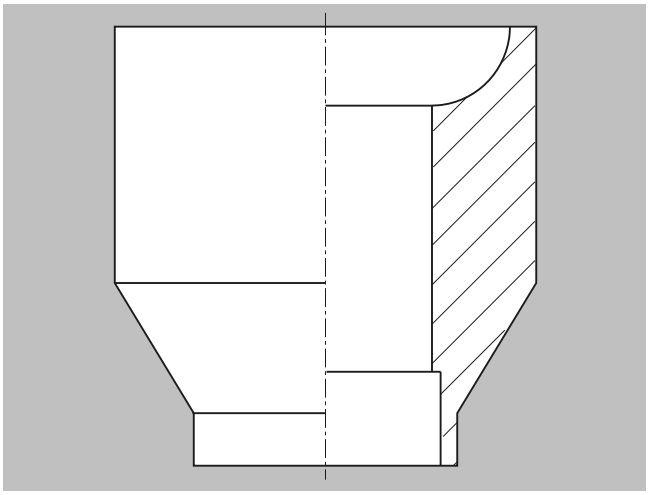

Weld-in sockets

Thread

Mounting type: Screw-in thread

Screw-in threads of different thread types and sizes are firmly welded to the thermowell.

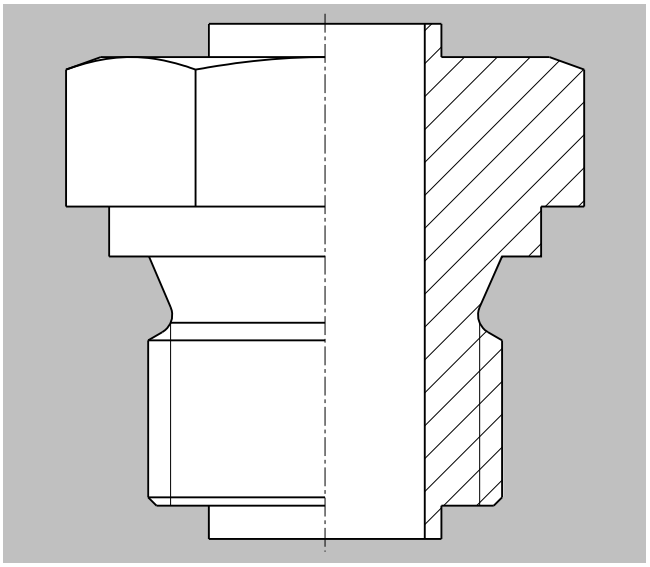

Screw-in thread

Mounting type: Compression fittings

Compression fittings are available as accessories. They fit the diameter of the thermowell and provide for flexible installation. The installation length can be selected on site. When installed correctly, compression fittings are well suited for low and medium pressure.

The difference between the standard and spring-loaded version is as follows:

In the case of the spring-loaded compression fitting, the sensor is pressed against the measured object or the base of the thermowell. thus achieving particularly good heat contact.

© Siemens AG 2025

Configuration (continued)

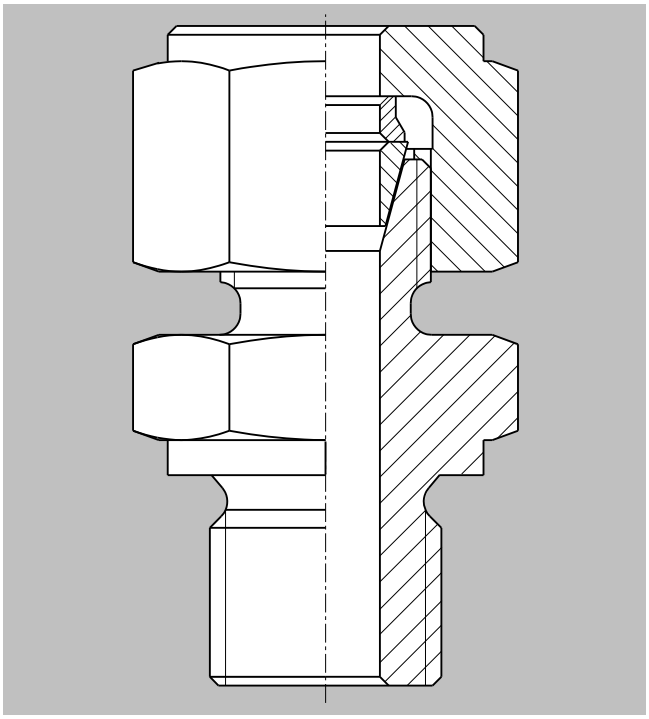

Compression fitting

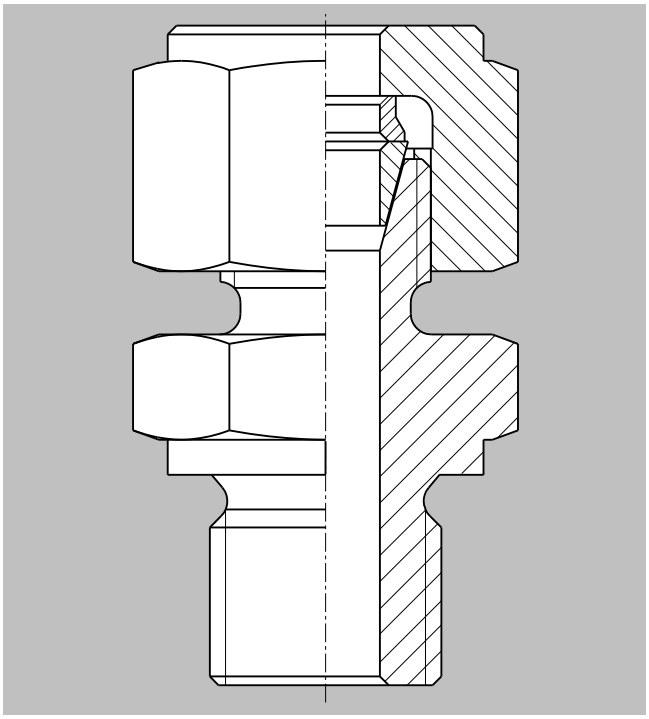

Spring-loaded compression fitting

Thread form:

Cylindrical thread

Cylindrical threads do not seal in the thread but due to an additional sealing surface or seal. For example, threads with the short form "G" (as per ISO 228) feature a thread form with a defined screw gauge.

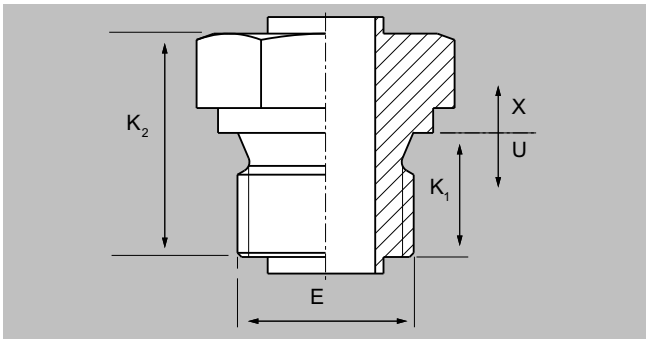

Cylindrical thread

Tapered thread

By contrast, tapered threads, such as the American "NPT" thread, seal metallic in the thread. The relevant length information in the catalog refers to the "fully-tightened point (hand-tight)" of the thread, which cannot be defined exactly due to standard-related tolerances. However, the spring-load of the measuring insert compensates for the differences in length.

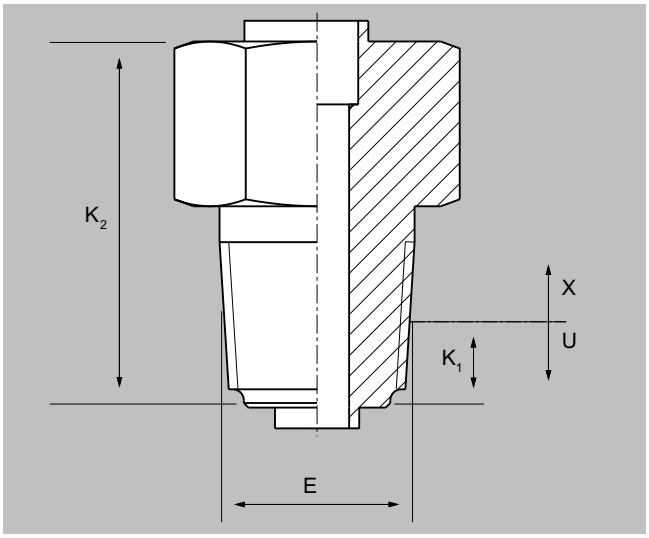

NPT thread

© Siemens AG 2025

Configuration (continued)

	Thread form:	E / E_1	K_1	K_2
Thermowells Form 2G + 3G	Cylindrical	G ½"	15	27
		G ¾"	16	34
		G1	30	46
		M20 × 1.5	12	26
		M27 × 2	16	34
		M33 × 2	18	36
	Tapered	NPT ½"	9	30
		NPT ¾"	9	32.5
		NPT 1"	10	40
Extensions 7MC7500	Cylindrical	G ½"	12	27
		M14 × 1.5	12	23
		M18 × 1.5	12	25
		M20 × 1.5	12	25
	Tapered	NPT ½"	9	33

X = extension length
U = installation length
E_1 = Neck pipe/process connection
K_1 = Screw-in depth
K_2 = Length of the process connection

Flanges

The different properties of the flanges are as follows:

- Standard series EN 1092, ASME 16.5,..
- Nominal pressure
- Nominal diameter
- Sealing surface

This information is also stamped into the flange, along with the material code and batch number for "3.1 Material". For flange thermowells made of expensive materials, wetted parts of the thermowell and the so-called flanged wheel are designed with the required material. The flanged wheel is welded in front of the flange sealing surface in this case. Non-wetted parts are listed in 316L.

Industry-specific process connections

Special process connections have become popular in different industries. For example, hygiene technology: clamp-on connections, dairy connections and others.

Components: Thermowell

Tubular or barstock thermowells fulfill two basic functions:

- They protect the measuring insert from corrosive media
- They make it possible to replace units during ongoing operation

This catalog is limited to the standard versions. Special designs are available on request. The large number of available types can be classified as follows.

Tubular thermowells

Tubular thermowells are also described as "welded" or "multi-part" thermowells (not to be confused with "multi-part protective fittings"). They are suitable for low to medium process loads and can be manufactured on a cost-effective basis.
Versions:

- Form 2N similar to DIN 43772
  with straight tip and shortest possible extension length
  non-adjustable connection head
- Form 2 as per DIN 43772
  with straight tip and extension
  adjustable connection head
  Form 2: without process connection
  Form 2G: Threaded connection
  Form 2F: Flange connection
- Form 3 according to DIN 43772
  Version with tapered tip and extension
  Adjustable connection head
  For these thermowells, the thermowell tip is tapered by rotary swaging. This results in an excellent fit with the measuring insert and very good response times.
  Like with form 2, versions 3G/3F are also available for form 3

Barstock thermowells acc. to DIN 43772

Where process loads are too great, or where a thermowell cannot have a welded seam, deep-hole drilled barstock thermowells are used. Thermowells of form 4 according to DIN 43772 are widely used. Forms D1-D5 of the previous standard DIN 43763 have been integrated into form 4 of DIN 43772:

Design DIN 43763 invalid	Design 4 DIN 43772 current	
	L in mm	U in mm
D1	140	65
D2	200	125
D4	200	65
D5	260	125

Tubular and barstock thermowells: Dimensions

The following table shows the dimensions of the different thermowells.

© Siemens AG 2025

Configuration (continued)

Thermowell type, design	Tip Inner diameter [mm (inch)] D_1	Outer diameter [mm (inch)] D_2	Process connection Inner diameter [mm (inch)] D_3	Outer diameter [mm (inch)] D_4
2N/2/2G/2F, pipe	7 (0.28)	9 (0.35)	7 (0.28)	9 (0.35)
2/2G/2F, pipe	7 (0.28)	12 (0.47)	7 (0.28)	12 (0.47)
3/3G/3F, pipe	6 (0.24) Tolerances acc. to DIN 43772	9 (0.35)	7 (0.28)	12 (0.47)
4/4F, barstock	7 (0.28)	12.5 (0.49)	7 (0.28)	24 (0.94)
4/4F, fast response, barstock	3.5 (0.14)	9 (0.35)	3.5 (0.14)	18 (0.71)

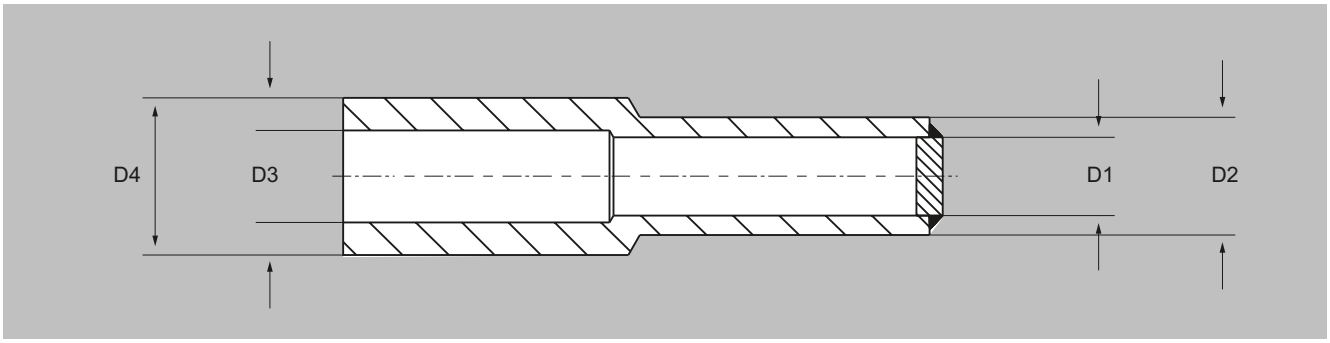

Dimensions of thermowells

Barstock thermowells according to ASME B40.9

Thermowells according to ASME are distinguished by their form: straight, reduced (staggered) or tapered along the entire installation length.

Coarse subdivisions can also be made in the type of process connection: Screwed design, for welding in, with flange, or with the so-called Van Stone connection.

For the Van Stone connection, a small flange sealing surface exists directly at the barstock thermowell. This prevents any welding seams in the area touching the media. The thermowell is fixed by a collar flange that presses the sealing surface against the plant-side flange. Another advantage of this design is the optimized spare parts inventory. A thermowell fits onto multiple connecting flanges; the only difference is in the collar flanges.

Components: Extension (neck pipe)

The extension is the section from the lower edge of the connection head to the fixed point of the process connection or thermowell. There are a variety of terms for this component, e.g. neck pipe. For this reason the term extension has been selected as a standardized term for the different designs. Function is the deciding factor:

- Thermal decoupling of connection head from process temperature
- Installation of connection head over existing insulation
- Simple standardization of measuring inserts: In general, the length of the extension may be freely selected. However, when using standardized installation lengths, the option "Extension as per DIN 43772" is recommended. This ensures that measuring inserts which are quickly available can be used. In the case of special installation lengths, it is possible to standardize the measuring insert length through a clever combination with the respective special extension length. This allows customers to optimize their costs in purchasing and logistics.
- For American-type sensors, the extension also undertakes the spring load of the measuring insert.
- Depending on the version, the extension can also enable the adjustment of the connection head
- The form of the extension depends on the form of the thermowell:
  - Tubular thermowell

    The extension and thermowell usually consist of one continuous pipe. The process connection is welded on (= one-piece protective fitting).
  - Barstock thermowells

    Extension and the thermowell consist of two components which are screwed together. The process connection is attached to the thermowell (= multi-piece protective fitting).

© Siemens AG 2025

Configuration (continued)

Thermowell type	X [mm (inch)]	M [mm (inch)]	Divisible
2G	129 (5.08)	145 (5.71)	No
2F	64 (2.52)	80 (3.15)	No
3G	131 (5.19)	147 (5.79)	No
3F	66 (2.60)	82 (3.23)	No
4 (only L=110)	139 (5.47)	155 (6.10)	Yes
4 (others)	149 (5.87)	165 (6.50)	Yes

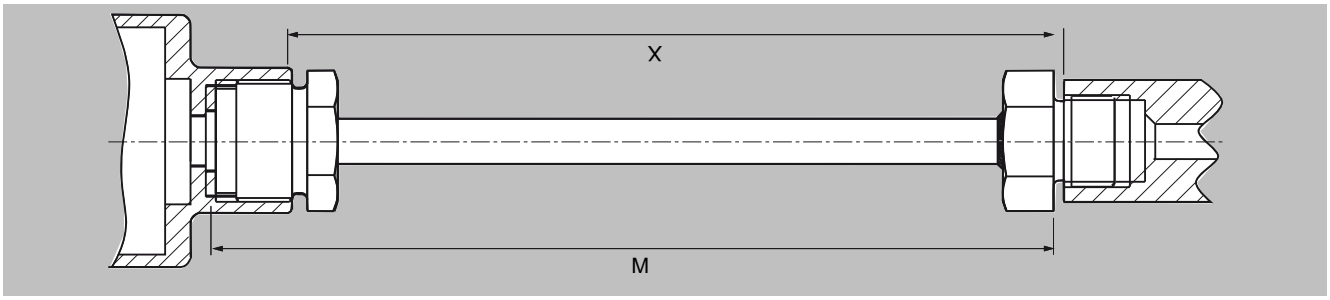

Extensions as per DIN 43772

Versions

With regard to their function, extensions can be classified into two types:

- Adjustable /non-adjustable:
  Function of the extension to align the connection head to the desired direction
- Integrated measuring insert spring load:
  In the case of American-type sensors, the spring load of the measuring insert is integrated into the extension. Measuring insert and extension form one unit.

© Siemens AG 2025

Configuration (continued)

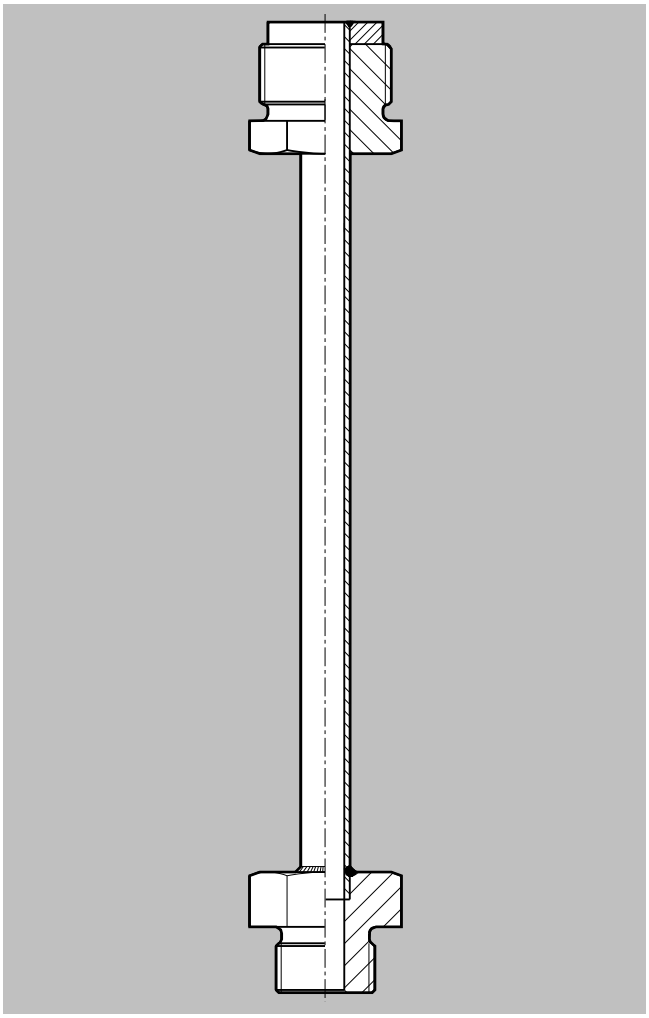

European type: Adjustable, cylindrical

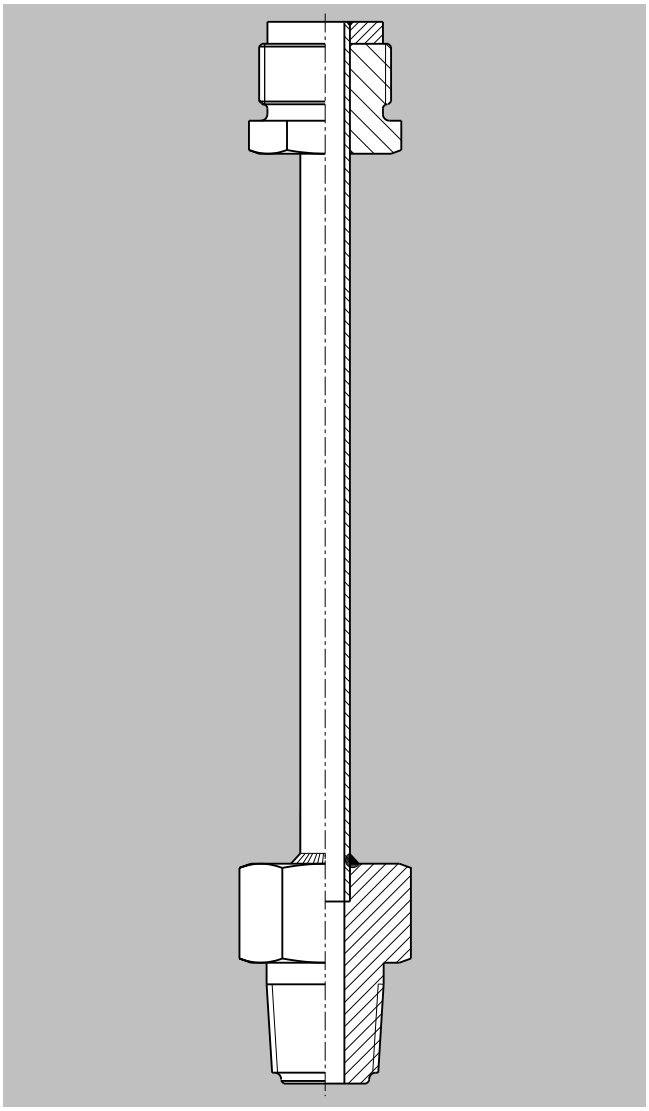

European type:
Adjustable, tapered

© Siemens AG 2025

Configuration (continued)

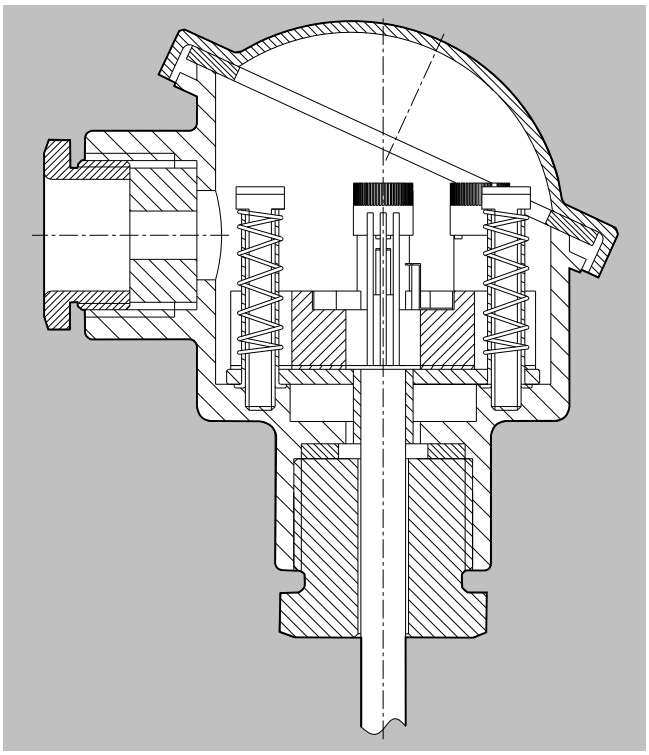

Without extension, without thread (optional sealing screw)

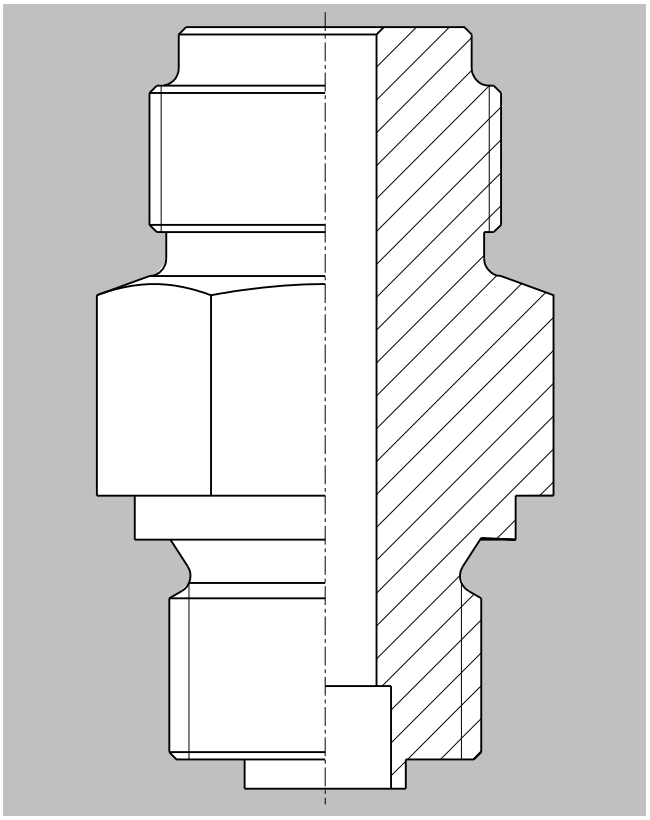

European type: Non-adjustable, cylindrical

© Siemens AG 2025

Configuration (continued)

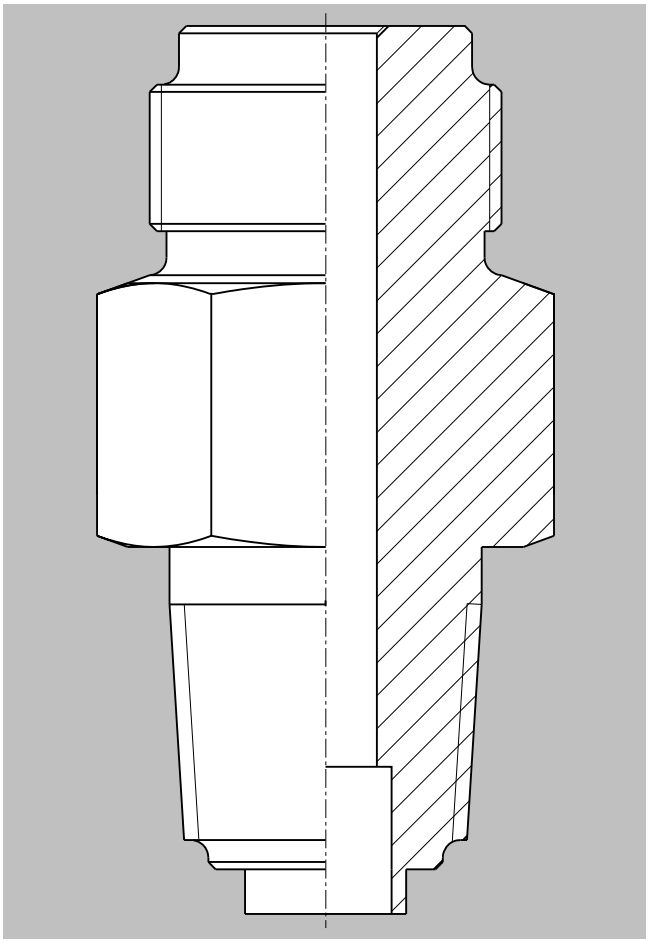

European type: Non-adjustable, tapered

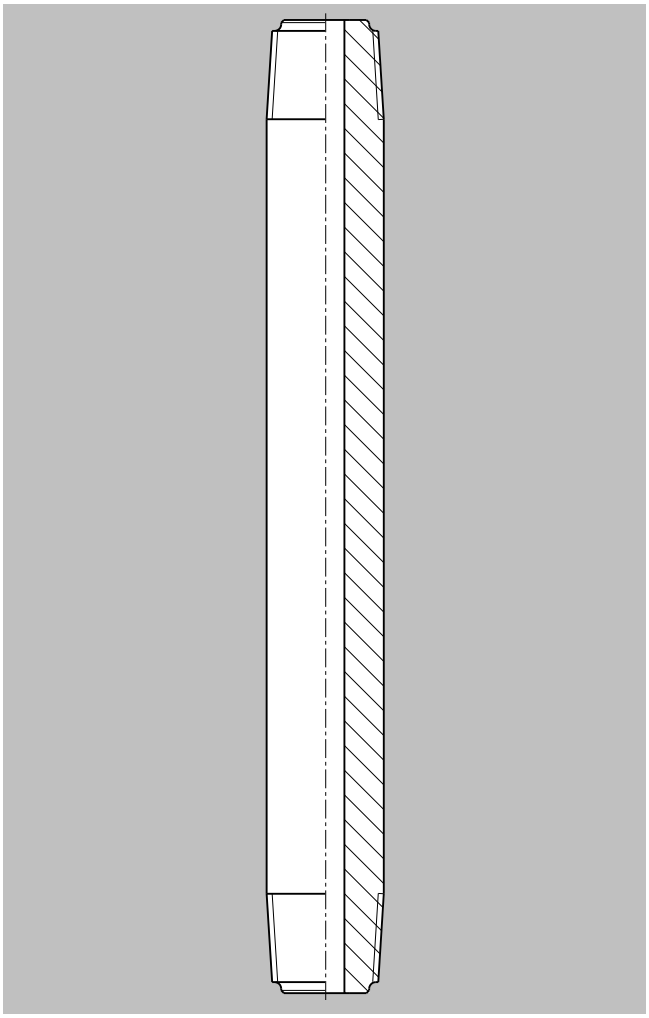

European type: Non-adjustable, Nipple (NIP)

© Siemens AG 2025

Configuration (continued)

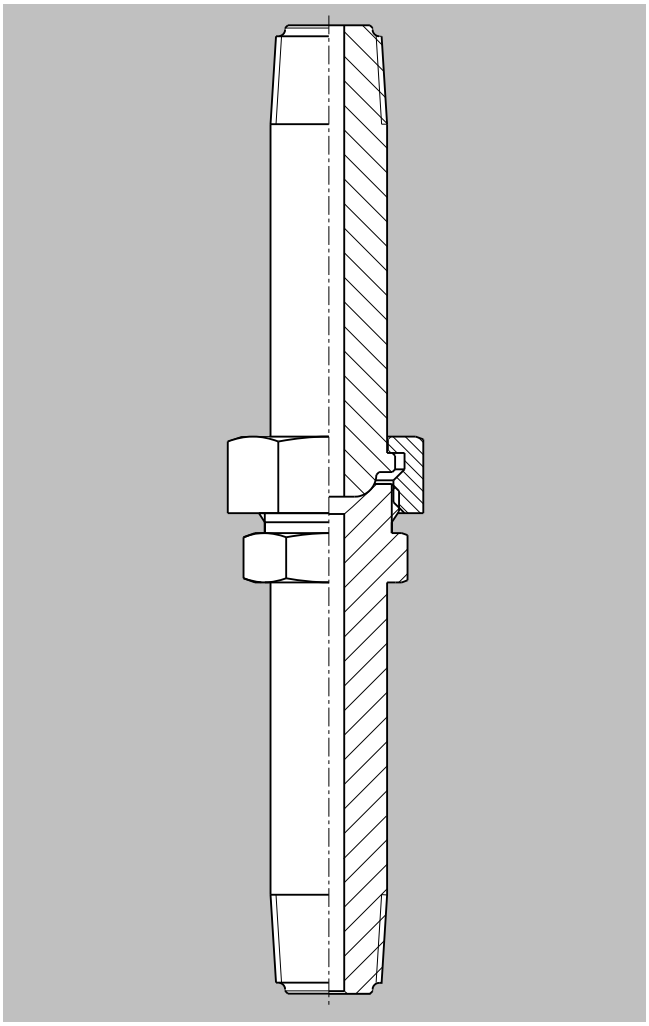

European type: Adjustable, Nipple-Union-Nipple (NUN)

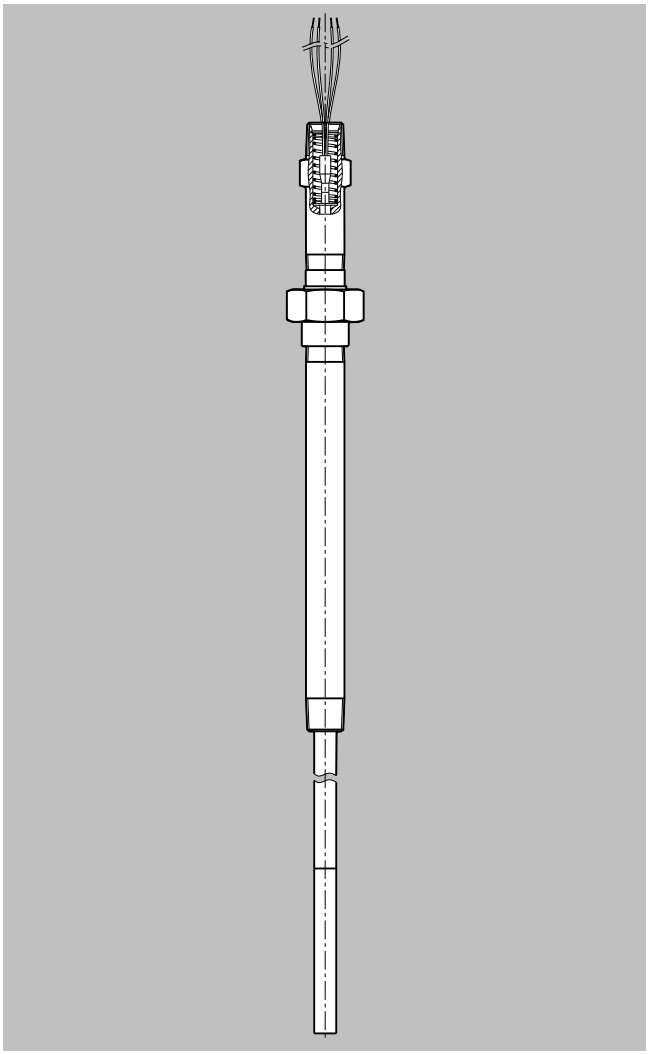

American type: Adjustable, Nipple-Union-Nipple (NUN)

© Siemens AG 2025

Configuration (continued)

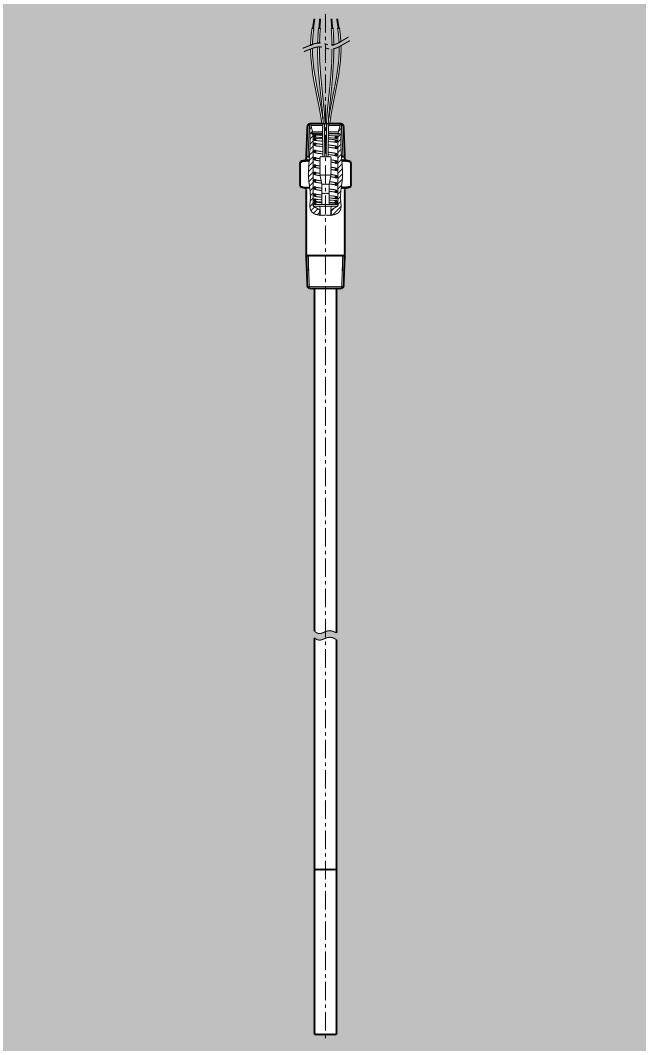

American type: Non-adjustable, Nipple (NIP)

Versions; in the case of heavy stainless steel connection heads in conjunction with vibrations, a short extension length should be chosen or external support should be provided.

Components: Connection head

Connection head

the connection head protects the terminal compartment. The connection head features sufficient room for mounting a clamping base or transmitter.

Different connection heads are used depending on the application and preference. Where cable glands and thread adapters are included in the scope of the order, they will be supplied with the device.

© Siemens AG 2025

Configuration (continued)

Connection head label	Type Material	Cable gland	Degree of protection [corrosion protection corresponding to ISO 12944-2]	Transmitter installation	Connection height H1 [mm (inch)]	Explosion protection optional
Flange cover 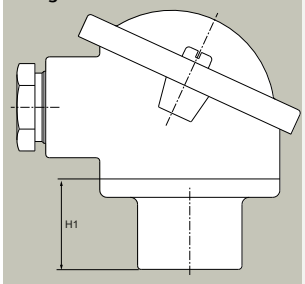	BA0 aluminum	M20 × 1.5 Not Ex: Plastic Ex i/Ex n: Brass	IP65 [C2, durability H; C3, durability M]	Measuring insert	26 (1.02)	Ex i
Spring flap low 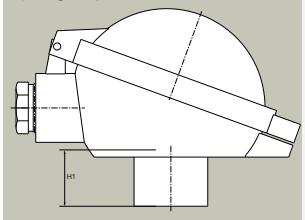	BB0 aluminum	M20 × 1.5 Not Ex: Plastic Ex i/Ex n: Brass	IP65 [C2, durability H; C3, durability M]	Measuring insert	26 (1.02)	Ex i
Spring flap high 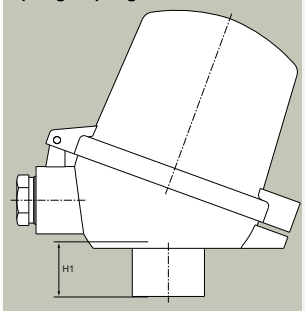	BC0 aluminum BC0 plastic	M20 × 1.5 Not Ex: Plastic Ex i/Ex n: Brass	IP65 [For aluminum: C2, durability H; C3, durability M] [For plastic: not applicable]	Measuring insert and/or spring flap	26 (1.02)	Ex i
Screw cover made of stainless steel 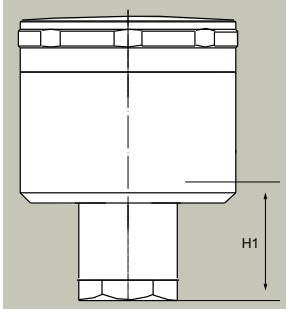	BS0 stainless steel	M12 × 1.5 polyamide	IP67 [For stainless steel: not applicable]	Measuring insert	26 (1.02)	Ex i

© Siemens AG 2025

Configuration (continued)

Connection head label	Type Material	Cable gland	Degree of protection [corrosion protection corresponding to ISO 12944-2]	Transmitter installation	Connection height H1 [mm (inch)]	Explosion protection optional
Screw cover, heavy-duty 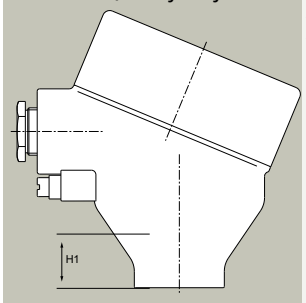 	AG0 aluminum AU0 stainless steel AISI 316 (1.4401)	M20 × 1.5 Not Ex: Plastic Ex i/Ex n: Brass Ex d: without cable gland	IP66/68 (IP68: 1.5 m; 2 h) NEMA 4X [For aluminum: C2, C3, C4, for stainless steel: not applicable]	Measuring insert	41 (1.61)	Ex i, Ex d
Screw cover, window, heavy duty, with 4 ... 20 mA local display 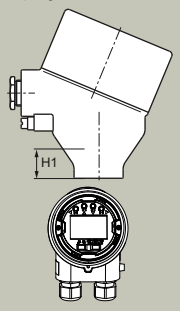 	AH0 aluminum AV0 stainless steel AISI 316 (1.4401)	M20 × 1.5 Not Ex: plastic Ex i/Ex n: brass Ex d: without cable gland	IP66/68 (IP68: 1.5 m; 2 h) NEMA 4X [For aluminum: C2, C3, C4, for stainless steel: not applicable]	Measuring insert	41 (1.61)	Ex i, Ex d

Components: Measuring insert

The measuring insert of the temperature sensor is built into the protective fitting (thermowell, extension and connection head). The basic sensor is located in the measuring insert, where it is protected. The spring load of the measuring inserts provide good thermal contact with the tip of the thermowell, and vibration resistance is significantly increased. Only highly resistant mineral-insulated cables (so-called MIC or plastic-sheathed) are used for the electrical connection between the basic sensor and connection head. The highly compacted insulation of magnesium oxide achieves excellent levels of vibration resistance. The following measuring insert designs are the most widely used on the world market:

European type

European type measuring inserts can be replaced without having to dismantle the connection head. The springs are located either on the transmitter or the terminal block. This makes it possible to achieve an 8 to 10 mm (0.315 to 0.394 inches) spring range. If a transmitter is not attached, a ceramic base is located at this position. Order option G01 can be used to select a version with flying leads instead of the ceramic base for mounting of head-mounted transmitters.

© Siemens AG 2025

Configuration (continued)

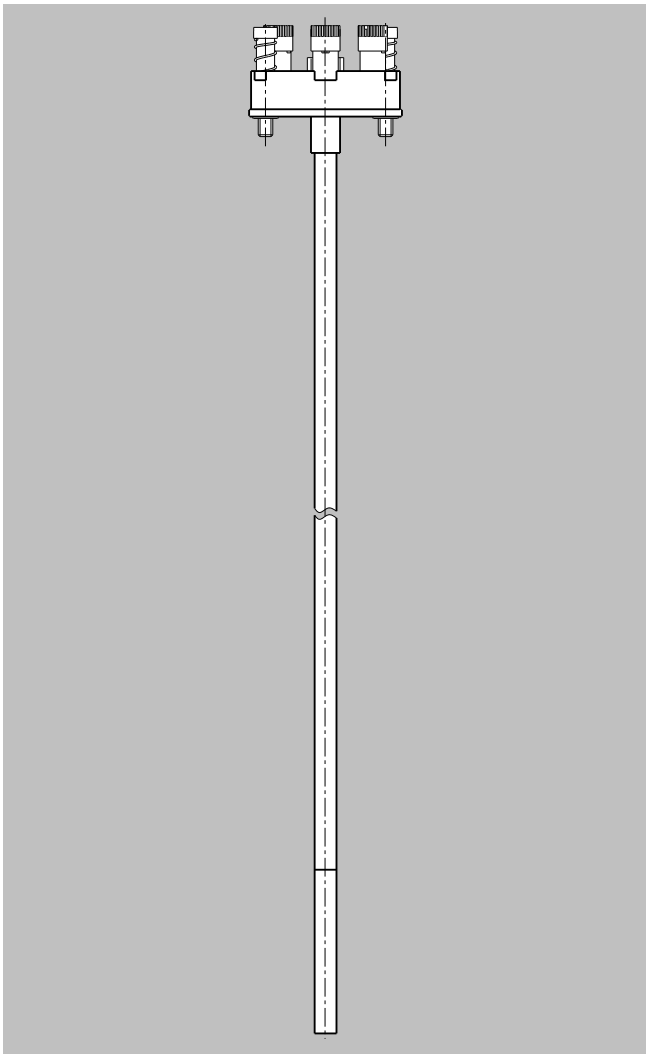

European type

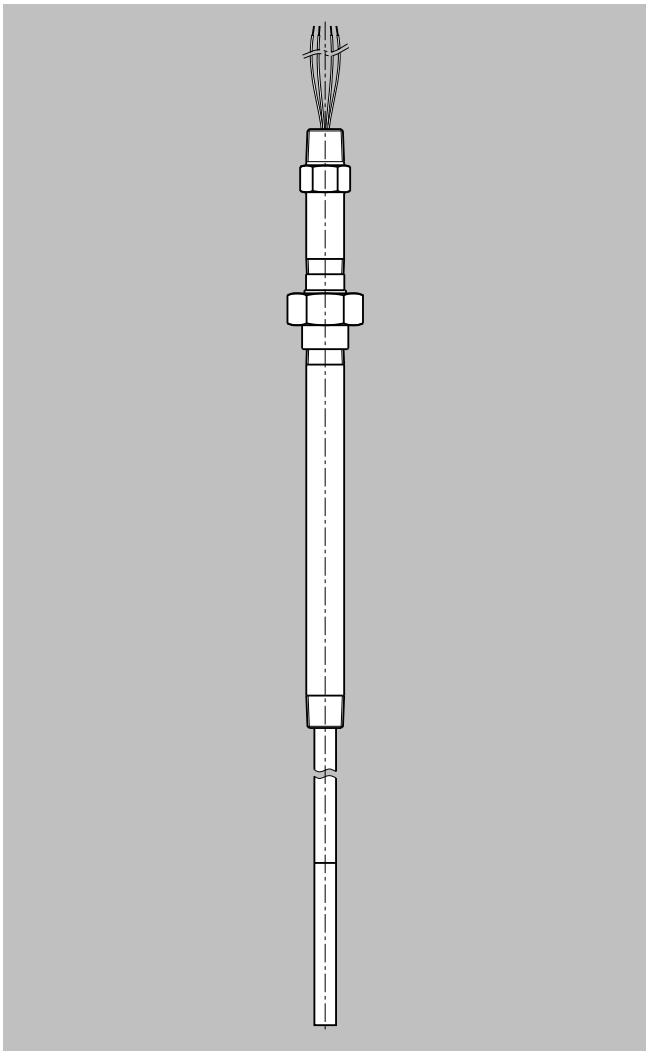

American type

American type

American-type measuring inserts feature a large spring range. These measuring inserts are ideal for use with NPT threads that feature high tolerances. In this configuration, the extension function is partially or fully integrated (nipple-union-nipple). Moreover, it is also possible to directly mount field devices, e.g. SITRANS TF.

Components: Transmitters

SITRANS TH head-mounted transmitters process weak, non-linear sensor signals and transmit a stable and temperature-linear standard signal. thereby minimizing sensor signal disruptions.

The transmitters permanently monitor the temperature sensors and transmit diagnostics data to higher-level systems.

Because of the low energy feed of the SITRANS TH head-mounted transmitters, self-heating of the temperature sensors is at a minimal level.

The galvanic isolation and integrated reference junction ensure that temperature sensors with thermocouples provide reliable measurements at a low cost.

SITRANS TH product family

For detailed technical specifications on the SITRANS TH transmitters, please refer to this catalog.

© Siemens AG 2025

Configuration (continued)

- TH100 - the basic device
  - Output: 4 ... 20 mA
  - 1 × Pt100 input
  - Can be configured using simple software
- TH320 - the universal device
  - Output 4 ... 20 mA or:
  - Output 4 ... 20 mA/HART
  - 1 × resistance thermometer, thermocouple input
  - Can be configured using simple software
- TH420 – Twice as safe
  - Output 4 ... 20 mA/HART
  - Output PROFIBUS PA
  - 2 × resistance thermometer, thermocouple input; hot backup and drift detection, etc. can be achieved as a result
  - Extended diagnostics functions

Installation types

All SITRANS TH transmitters can be installed in type B connection heads. The following installation forms are used:

- Measuring insert installation
  Our standard version offers the following advantages
  - Small vibrating masses and compact design
  - Measuring insert-transmitter unit can be replaced quickly

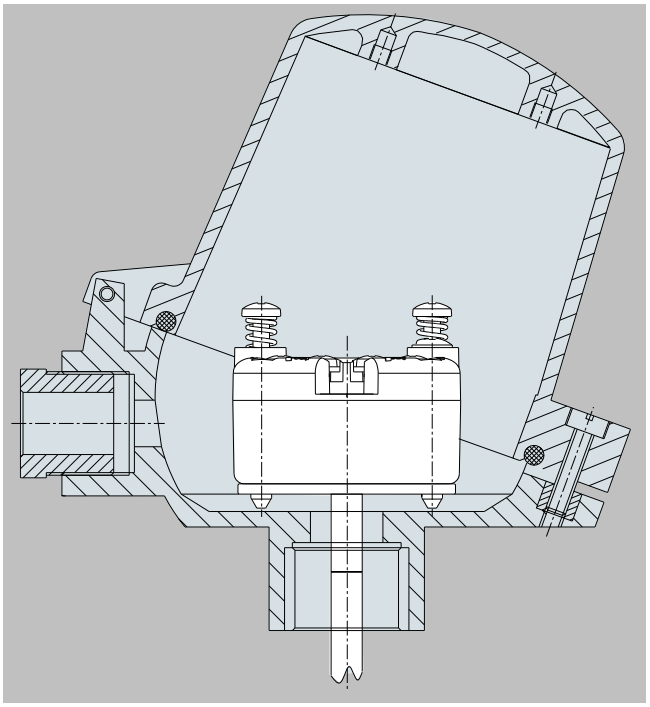

Installation of measuring insert

- Spring flap installation
  - Standard for head type BC0 and BP0
  - Advantage: Measuring insert and transmitter can be repaired/maintained separately (recalibration).

© Siemens AG 2025

Configuration (continued)

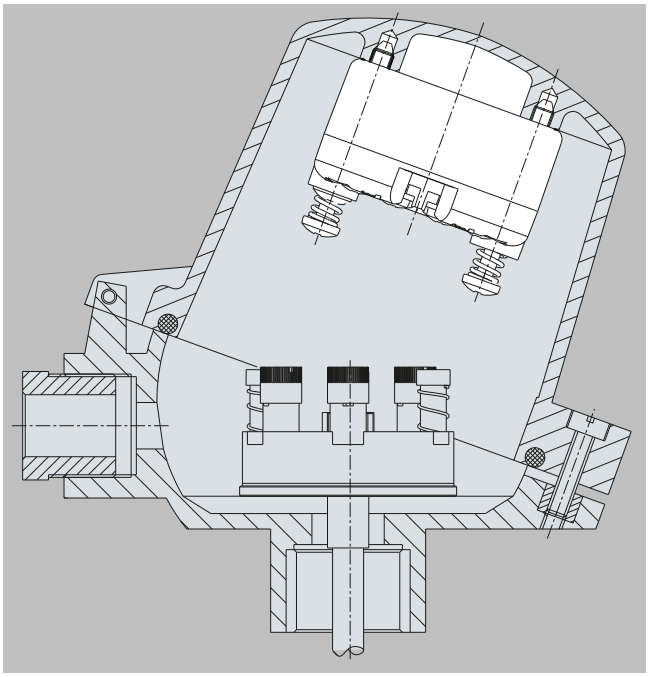

Spring flap installation

Measuring technology: Basic sensors

The diverse application spectrum for industrial temperature measuring technology requires different sensor technologies.

Resistance thermometer

Basic sensors made of other basic materials, with different basic values or different underlying standards, are available on request. Resistance thermometers can be classified as follows:

- Basic design:
  The sensor element is built with thin layer technology. The resistance material is applied in the form of a thin layer on a ceramic carrier material.
- Versions with increased vibration resistance:
  In addition to the basic design: Measures to improve vibration resistance.
- Versions with expanded measuring range:
  Elements in wire-wound design. The wire winding is embedded in a ceramic body.

Thermocouples

Thermocouples based on other thermocouples or underlying standards are available upon request.

The most common base-metal thermocouples are:

- Type N (NiCrSi-NiSi) high degree of stability even in the upper temperature range
- Type K (NiCr-Ni) more stable than type J, but drifts in upper range
- Type J (Fe-CuNi) narrow application band

Measuring technology: Measuring range

The measuring range describes the temperature limits within which the thermometer can be used in a way that is meaningful for measurement purposes. Depending on the loads present, the thermowell materials and the desired accuracy levels, among other things, the actual application range for the thermometer may be smaller.

Resistance thermometer [°C (°F)]	
Basic version and increased vibration resistance	-50 ... +400 (-58 ... +752)
Expanded measuring range	-196 ... +600 (-320.8 ... +1112)

Thermocouple [°C (°F)]	
Type N	-270 ... +1 100 (-167 ... +2 012)
Type K	-270 ... +1 100 (-167 ... +2 012)
Type J	-210* ... +750 (-134* ... +1 382)

* According to IEC 60 584: recommended 0 ... +750 °C

Measuring technology: Measuring accuracy

Resistance thermometer

The tolerance classes of the resistance thermometers correspond to IEC 751/EN 60751:

Tolerance	Δt
Basic accuracy, Class B	± (0.30 °C +0.0050|t[°C]|) 0.54 °F +0.0050x|t[°F]-32|
Increased accuracy, Class A	± (0.15 °C +0.0020|t[°C]|) 0.27 °F +0.0020x|t[°F]-32|
High accuracy, Class AA (1/3 B)	± (0.10 °C +0.0017|t[°C]|) ± 0.18 °F +0.0017x|t[°F]-32|

The following tables provide an overview of the scope of these tolerances. If the specified limits are exceeded with a resistance thermometer, the values of the next lower accuracy class permanently apply:

Resistance thermometer, Basic version [°C (°F)]	
Tolerance	**Range**
Basic accuracy, Class B	-50 ... +400 (-58 ... +752)[1]
Increased accuracy, Class A	-30 ... +300 (-22 ... +572)
High accuracy, Class AA (1/3 B)	0 ... 150 (32 ... 302)

Resistance thermometer, Increased vibration resistance [°C (°F)]	
Tolerance	**Range**
Basic accuracy, Class B	-50 ... +400 (-58 ... +752)[1]
Increased accuracy, Class A	-30 ... +300 (-22 ... +572)
High accuracy, Class AA (1/3 B)	0 ... 150 (32 ... 302)

Resistance thermometer, Expanded measuring range [°C (°F)]	
Tolerance	**Range**
Basic accuracy, Class B	-196 ... +600 (-321 ... +1 112)
Increased accuracy, Class A	-100 ... +450 (-148 ... +842)
High accuracy, Class AA	-50 ... +250 (-58 ... +482)

[1] The requirements of IEC 60751 are observed. In the event of high requirements regarding long-term stability, Pt 100 sensors "expanded measuring range" should be used for temperatures above 350 °C (662 °F).

Thermocouples

The tolerance classes of the thermocouples correspond with IEC 584/EN 60584:

© Siemens AG 2025

Configuration (continued)

Catalog versions

Type	Basic accuracy, Class 2	Increased accuracy, Class 1
N	-40 °C ... +333 °C ±2.5 °C (-40 °F ... +631 °F ±4.5 °F) 333 °C ... 1200 °C ±0.0075x|t[°C]| (631 °F ... 2192 °F ±0.0075x|t[°F]-32|)	-40 °C ... +375 °C ±1.5 °C (-40 °F ... +707 °F ±2.7 °F) 375 °C ... 1000 °C ±0.004x|t[°C]| (707 °F ... 1832 °F ±0.004x|t[°F]-32|)
K	-40 °C ... +333 °C ±2.5 °C (-40 °F ... +631 °F ±4.5 °F) 333 °C ... 1200 °C ±0.0075x|t[°C]| (631 °F ... 2192 °F ±0.0075x|t[°F]-32|)	-40 °C ... +375 °C ±1.5 °C (-40 °F ... +707 °F ±2.7 °F) 375 °C ... 1000 °C ±0.004x|t[°C]| (707 °F ... 1832 °F ±0.004x|t[°F]-32|)
J	-40 °C ... +333 °C ±2.5 °C (-40 °F ... +631 °F ±4.5 °F) 333 °C ... 750 °C ±0.0075x|t[°C]| (631 °F ... 1382 °F ±0.0075x|t[°F]-32|)	-40 °C ... +375 °C ±1.5 °C (-40 °F ... +707 °F ±2.7 °F) 375 °C ... 750 °C ±0.004x|t[°C]| (707 °F ... 1382 °F ±0.004x|t[°F]-32|)

Other thermocouples, ignoble

Type	Basic accuracy, Class 2	Increased accuracy, Class 1
T	-40 °C ... 133 °C ±1 °C (-40 °F ... +271 °F ±1.8 °F) 133 °C ... 350 °C ±0.0075x|t[°C]| (271 °F ... 662 °F ±0.0075x|t[°F]-32|)	-40 °C ... +125 °C ±0.5 °C (-40 °F ... +257 °F ±0.9 °F) 125 °C ... 350 °C ±0.004x|t[°C]| (257 °F ... 662 °F ±0.004x|t[°F]-32|)
E	-40 °C ... +333 °C ±2.5 °C (-40 °F ... +631 °F ±4.5 °F) 333 °C ... 900 °C ±0.0075x|t[°C]| (631 °F ... 1652 °F ±0.0075x|t[°F]-32|)	-40 °C ... +375 °C ±1.5 °C (-40 °F ... +707 °F ±2.7 °F) 375 °C ... 800 °C ±0.004x|t[°C]| (707 °F ... 1472 °F ±0.004x|t[°F]-32|)

Other thermocouples, noble

Type	Basic accuracy, Class 2	Increased accuracy, Class 1
R and S	0 °C ... 600 °C ±1.5 °C (32 °F ... 1112 °F ±2.7 °F) 600 °C ... 1600 °C ±0.0025x|t[°C]| (1112 °F ... 2912 °F ±0.0025x|t[°F]-32|)	0 °C ... 1100 °C ±1 °C (32 °F ... 2012 °F ±1.8 °F) 1100 °C ... 1600 °C ± [1 + 0.003 x (t - 1100)] °C (2012 °F ... 2912 °F ±1.8 + 0.003x(t[°F]-2012))
B	600 °C ... 1 700 °C ±0.0025x|t[°C]| (1 112 °F ... 3 092 °F ±0.0025x|t[°F]-32|)	

SITRANS TS300 Clamp-on

Measuring accuracy	
Reference conditions	
• Pipe	Pipe 13 × 1.5 mm (0.51 × 0.06 inches) made of stainless steel using thermal paste
• Ambient temperature	20 °C (68 °F)
• Medium	Water 120 °C (248 °F)
• Flow velocity	3 m/s (9.84 ft/s)
Measuring accuracy when using thermal paste The accuracy depends on the geometry of the pipe, the medium and the ambient conditions T_M = Medium temperature; T_A = Ambient temperature	Process-optimized for steam sterilization
• Class A according to IEC 60751	-40 ... +150 °C (-40 ... 302 °F) $(T_A-T_M) \times 0.02$

Measuring technology: Response times

Response time describes the speed of the measurement system in the case of a temperature change, and is typically indicated as T0.5 or T0.9. The values indicate the time in which a measured value has increased to 50% or 90% of the actual temperature increase.

The main variables which affect response time are as follows:

- Thermowell geometry, ideal are:
  - Very little material at the tip
  - Use of conductive material
- Thermal connection of measuring insert to the thermowell:
  Because of design changes implemented for the measuring insert (small gap width, spring system), Siemens measuring inserts feature very good response behavior. Due to the good fit, additional contact materials are not usually required except in certain applications, e.g. attachment of a surface sensor.
- Size of temperature increase
- Medium and flow velocity

Resistance thermometer

Typical values as per EN 60751 in water at 0.4 m/s can be found in the following table.

Thermowell form	Diameter [mm (inch)]	T0.5	T0.9
None	6 (0.24)	6	15
Straight (2)	9 (0.35)	34	90
	12 (0.47)	45	143
Tapered (3)	12 (0.47)	15	31
Barstock (4), U/C = 65	24 (0.95)	40	100
Barstock (4), U/C = 125	24 (0.95)	40	110

Thermocouples

Typical values as per EN 60751 in water at 0.4 m/s can be found in the following table.

© Siemens AG 2025

Configuration (continued)

Thermowell form	Diameter [mm (inch)]	T0.5	T0.9
None	6 (0.24)	2	4
Straight (2)	9 (0.35)	20	63
	12 (0.47)	19	66
Tapered (3)	12 (0.47)	7	22
Barstock (4), U/C = 65	24 (0.95)	22	73
Barstock (4), U/C = 125	24 (0.95)	20	53

Measuring technology: Mounting depth

Measuring insert

Type	Temperature-sensitive length (TSL) [mm (inch)]	Non-bendable length [mm (inch)]
Basic	20 (0.79)	30 (1.82)
Increased vibration resistance	20 (0.79)	30 (1.82)
Expanded measuring range	50 (1.97)	60 (2.36)
Thermocouple	20 (0.79)	5 (0.20)

Immersion depth/contact with medium

The "heat transfer error" arises depending on the ambient conditions (temperature/weather/insulation) and the size of the thermowell, process connection and pipe.

To prevent such an error, the immersion depth and diameter of the thermowell are defined. The temperature-sensitive length (TSL) of the thermowell must also be taken into account. The following rule of thumb can be used:

- Water
  Immersion depth ≥ TSL + 5 × thermowell diameter
- Air
  Immersion depth ≥ TSL + 10 ... 15 × thermowell diameter
- Recommendations
  - Select largest possible immersion depth
  - Select measuring location with higher flow velocity
  - Insulate outer components of thermometer
  - Smallest possible surface for outer components
  - Insertion in pipe bends
  - Direct measurement without additional thermowell if no suitable solution can be found using other measures

Measuring technology: Connection types

For resistance thermometers, the type of sensor connection directly affects the level of accuracy:

2-wire connection

The resistance of sensor lines is included in the measurement result as an error. Adjustments are recommended in this case.

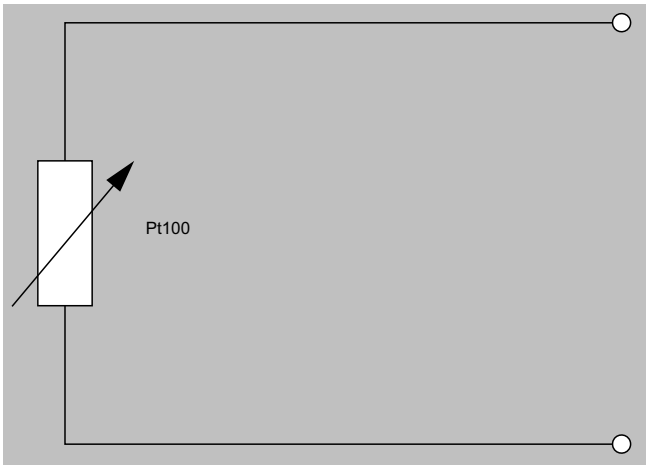

Pt100 2-wire connection

3-wire connection

Line resistance is not included in the measurement result. Requirement: All terminal and wire resistances (corrosion) are at the same level, and terminals are at the same temperature level. Unfortunately, this is often not the case in practice.

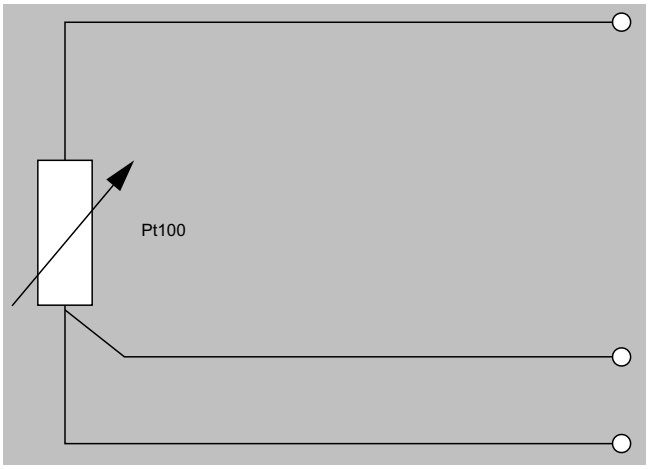

Pt100 3-wire connection

4-wire connection

Line resistance is not included in the measurement result. This type of connection is the most secure and most accurate.

© Siemens AG 2025

Configuration (continued)

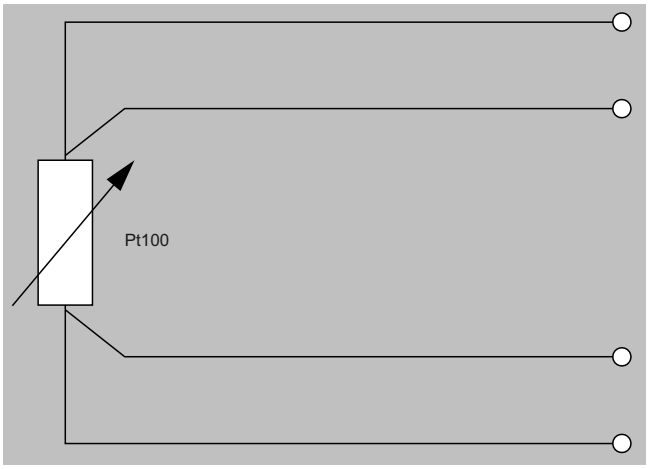

Pt100 4-wire connection

Siemens measuring inserts can be used to implement all types of connections for Pt100 devices. In the standard version, these are always supplied as 1 × 4-wire or 2 × 3-wire.

Even 2 × 4-wire are available using order option "G30". Our SITRANS TH420 transmitters offer the unique possibility to connect 2 × 4-wire resistance thermometers. The user therefore no longer has to live with the disadvantages of the 3-wire circuit when redundant sensor designs are required at the same time for safety reasons. If a complete second measuring point had to be instrumented in these cases, this work is now eliminated.

Temperature influence

At connection head TS500 [1)]

	Without transmitter [°C (°F)]	With suitable transmitter [°C (°F)]
A heads AG0/AH0/AU0/AV0 non-SIL[2)]	-50 ... +100 (-58 ... +212)	-50 ... +80 (-58 ... +176)
Aluminum or stainless steel	-40 ... +100 (-40 ... +212)	-40 ... +80 (-40 ... +176)
Plastic	-40 ... +85 (-40 ... +185)	-40 ... +80 (-40 ... +176)

1) In the case of applications in hazardous areas, observe information in manual.
2) Check cable gland and transmitter (e.g. not for Han 7 device plugs, M12).

Special climatic conditions

SITRANS TS200 Compact, TS500 and TSinsert achieve the following classes of application according to IEC 60654-1 for use in tropical climates:

- C3 for sheltered locations
- D2 for outdoor locations

At the TS200 plug-in connection/cable connection site

The specified measuring range applies to the hot side of the sensor. The maximum permissible temperature at the cold end depends on the cables and plugs used. < 80 °C (176 °F) is considered non-critical here.

Influence of extension

The illustration below assists you in selecting the right length for the neck pipe. In this case, the following applies: Connection head temperature = Ambient temperature + Overtemperature. The temperature in the connection head can thus be assessed as follows:

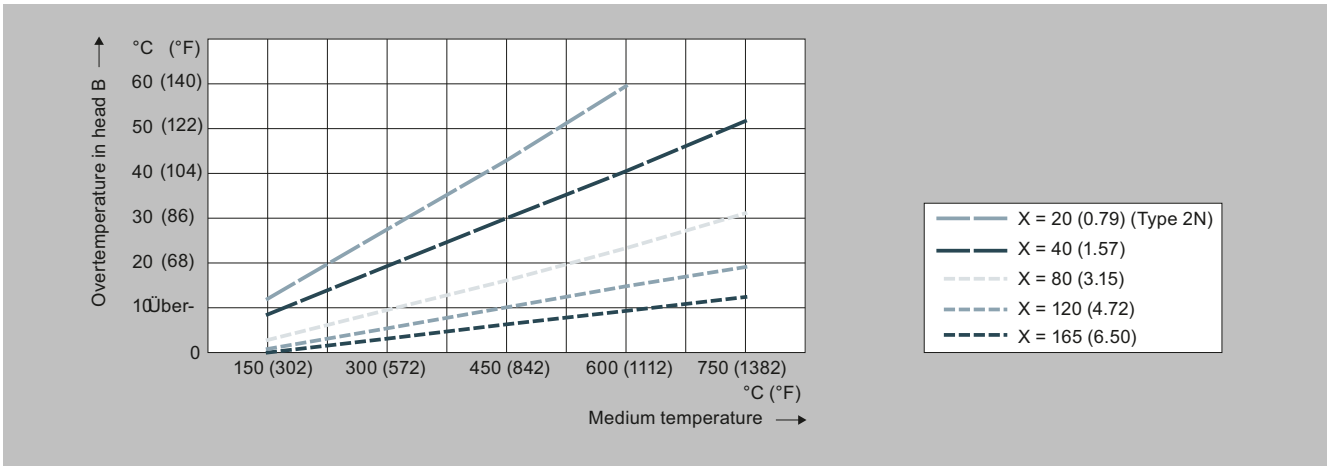

Extension length X, influence on temperature, dimensions in mm (inch)

Note that guidance values may change due to local conditions. Consider these potential changes particularly with respect to explosion protection.

Also note that the accuracy of the transmitter also depends on the temperature in the connection head.

© Siemens AG 2025

Configuration (continued)

SITRANS TS300 Clamp-on

Structural design	
Measuring insert	• Special measuring insert made of stainless steel; hygienic design • Measuring element made of silver; thermal decoupling by plastic insert Measuring insert screwed into collar with spring tension. Use thermo-lubricant (see accessories) prior to mounting the device.
Pipe collar	
Material	Temperature-resistant, high-performance plastic with integrated insulation system in hygienic design
Ambient temperature influence	Approx. 0.2%/10 K

Process connection/thermowell

Process parameters may only allow one specific technology for the selection of process connections. You also have to observe regional, standard-based and customer-specific requirements. The range of products therefore includes a broad selection of standard connections.

In the case of redesigned or newly designed facilities, it is possible to achieve cost savings by implementing various measures:

- Use of standard lengths through clever selection of screw-in, weld-in or flange sockets
- Moveable compression fittings

The thermal stability of a material for process connection and thermowell also limits the application area of the temperature sensor. The temperature range specified on the type plate always refers to the measuring insert, not the material which comes into contact with media. Two aspects must be considered when assessing temperature stability:

- What maximum temperature may the material reach without a load?
- What is the behavior under load?

Pressure Equipment Directive

This device does not fall under the Pressure Equipment Directive; classification according to Pressure Equipment Directive (PED 2014/68/EU), Guideline 1/40; Article 1, Paragraph 2.5

Hydrogen applications

Our solutions with austenitic materials (especially 316L/1.4404 in this case) are suitable for measuring temperatures in hydrogen. In principle, all productive tube and process connection types can be used for this purpose. Due to the large material thicknesses, H2 diffusion is small and usually does not pose a problem. For particularly requirements for high diffusion tightness, full-penetration-welded flange connections or the weld-free Vanstone designs are available.

Process load

Because of the large variety of possible applications and variables, it is not possible to make general binding statements regarding the resilience of components which comes into contact with media. The load diagrams below can be used for common applications. However, where operating conditions vary significantly, contact our technical support team.

Load on the thermowell and remedies:

The process itself	Correction options
Temperature	Material selection
Pressure	Thermowell design
Flow velocity	Installation length, thermowell form
Viscosity	Installation length, thermowell form
Vibration	Support against vibration
Corrosiveness	Material selection, coating, covering
Abrasion (e.g. carbon dust)	Sensing rod, coating

Load diagrams

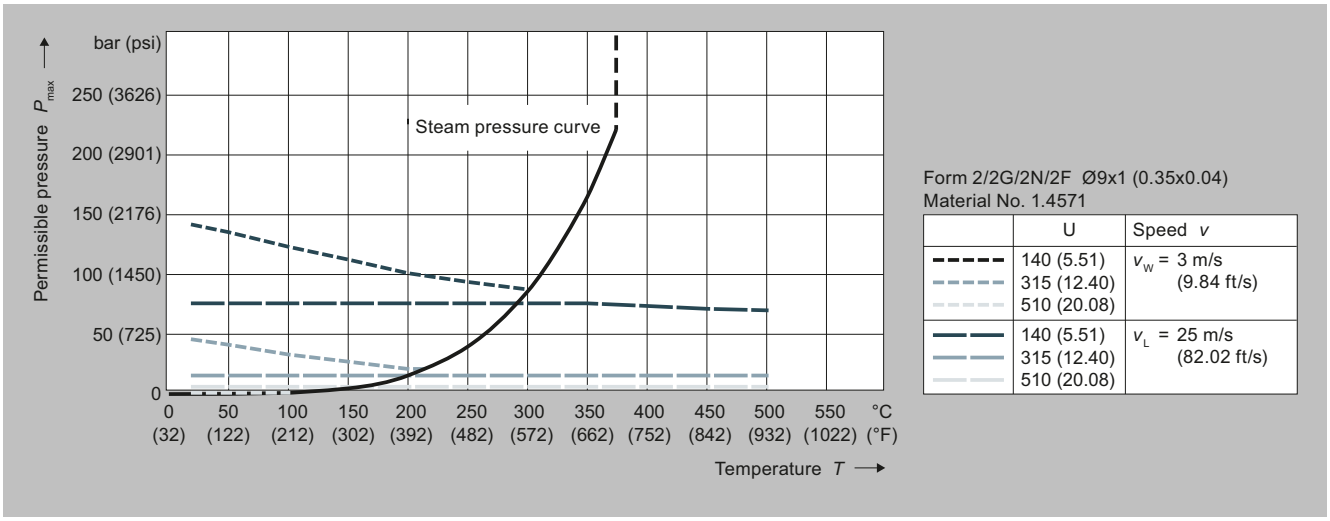

Thermowells with diameter 9 × 1 mm (0.35 × 0.04 inches), dimensions in mm (inch)

© Siemens AG 2025

Configuration (continued)

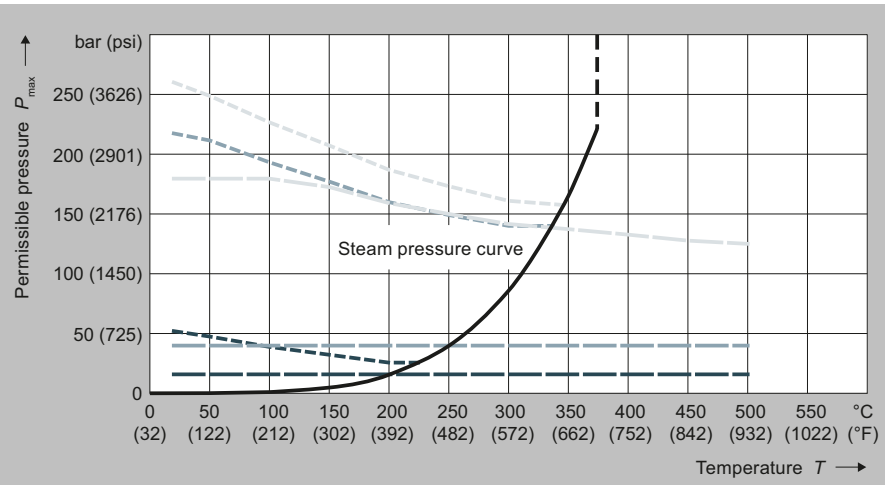

Form 2/2G/2N/2F Ø12x2.5 (0.47x0.10)
Material No. 1.4571

	U	Speed v
	140 (5.51) 315 (12.40) 510 (20.08)	v_W = 3 m/s (9.84 ft/s)
	140 (5.51) 315 (12.40) 510 (20.08)	v_L = 25 m/s (82.02 ft/s)

Thermowells with diameter 12 × 2.5 mm (0.47 × 0.10 inches), dimensions in mm (inch)

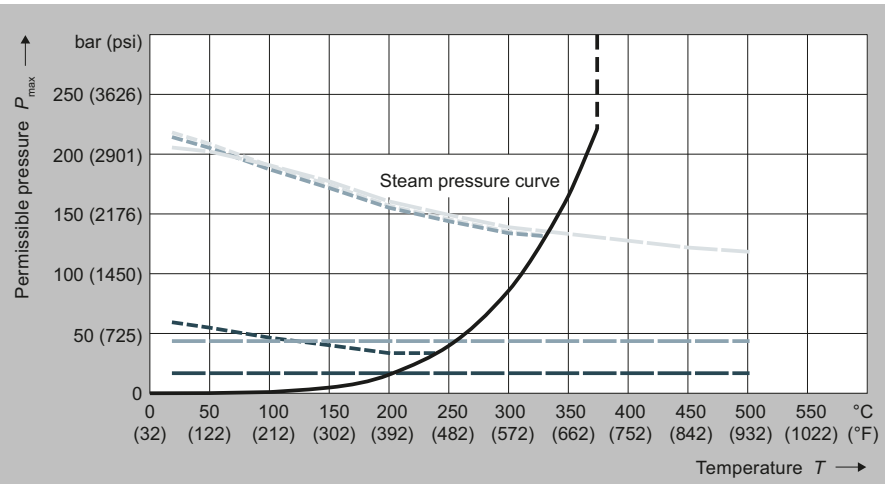

Form 3/3G/3F Ø12x2.5 (0.47x0.10)
Material No. 1.4571

	U	Speed v
	140 (5.51) 315 (12.40) 510 (20.08)	v_W = 3 m/s (9.84 ft/s)
	140 (5.51) 315 (12.40) 510 (20.08)	v_L = 25 m/s (82.02 ft/s)

Thermowells with diameter 12 × 2.5 mm (0.47 × 0.10 inches) and 14 × 2.5 mm (0.55 × 0.10 inches), dimensions in mm (inch)

© Siemens AG 2025

Configuration (continued)

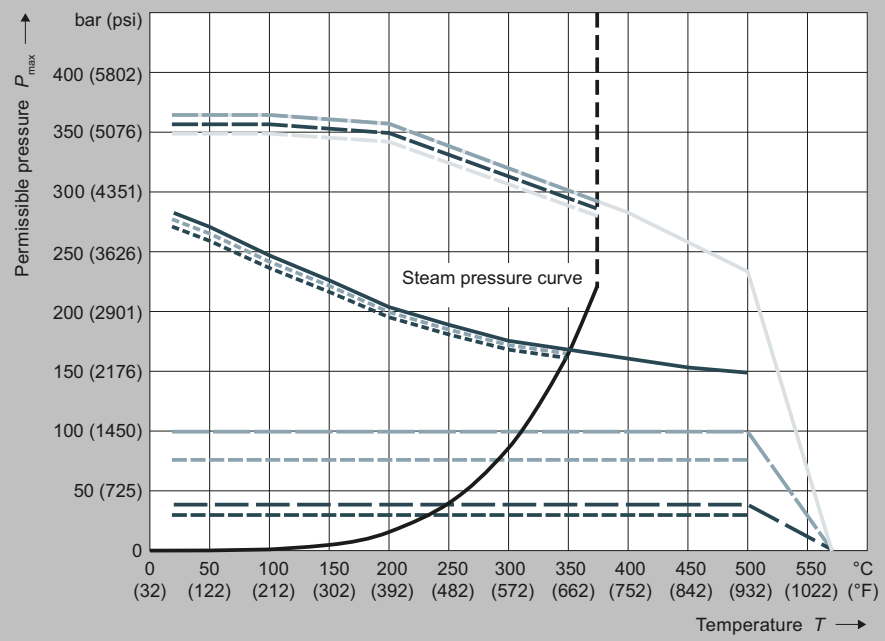

Form 4/4F Ø24 (0.94); C=65 (2.56)
Material No. 1.4571

	U	Speed v
	140/510 (5.51/20.08) 315 (12.40)	v_W = 5 m/s (16.40 ft/s)
	140 (5.51) 315 (12.40) 510 (20.08)	v_L = 40 m/s (131.20 ft/s)

Form 4/4F Ø24 (0.94); C=65 (2.56)
Material No. 1.7335

	U	Speed v
	140 (5.51) 315 (12.40) 510 (20.08)	v_W = 5 m/s (16.40 ft/s)
	140 (5.51) 315 (12.40) 510 (20.08)	v_L = 40 m/s (131.20 ft/s)

Thermowells with diameter 24 mm (0.95 inches), C = 65 mm (2.60 inches), dimensions in mm (inch)

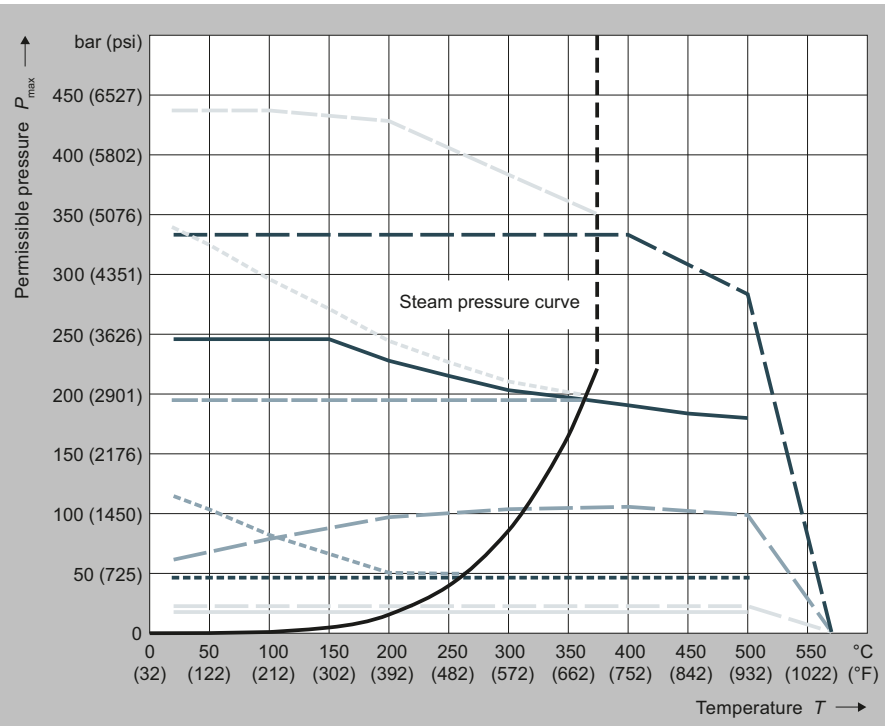

Form 4/4F Ø18 (0.71); C=65 (2.56)
Material No. 1.4571

	U	Speed v
	140/315 (5.51/12.40) 510 (20.08)	v_W = 5 m/s (16.40 ft/s)
	140 (5.51) 315 (12.40) 510 (20.08)	v_L = 40 m/s (131.20 ft/s)

Form 4/4F Ø18 (0.71); C=65 (2.56)
Material No. 1.7335

	U	Speed v
	140/315 (5.51/12.40) 510 (20.08)	v_W = 5 m/s (16.40 ft/s)
	140 (5.51) 315 (12.40) 510 (20.08)	v_L = 40 m/s (131.20 ft/s)

Thermowells with diameter 18 mm (0.71 inches), C = 65 mm (2.60 inches), dimensions in mm (inch)

© Siemens AG 2025

Configuration (continued)

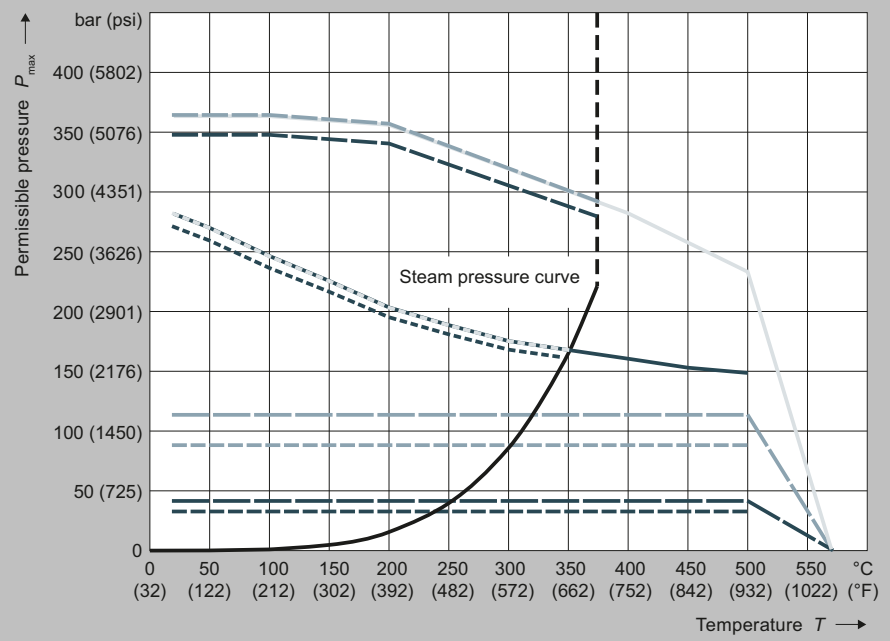

Form 4/4F Ø24 (0.94); C=125 (4.92)
Material No. 1.4571

	U	Speed v
	140/315 (5.51/12.40) 510 (20.08)	v_W = 5 m/s (16.40 ft/s)
	140 (5.51) 315 (12.40) 510 (20.08)	v_L = 40 m/s (131.20 ft/s)

Form 4/4F Ø24 (0.94); C=125 (4.92)
Material No. 1.7335

	U	Speed v
	140/315 (5.51/12.40) 510 (20.08)	v_W = 5 m/s (16.40 ft/s)
	140 (5.51) 315 (12.40) 510 (20.08)	v_L = 40 m/s (131.20 ft/s)

Thermowells with diameter 24 mm (0.95 inches), C = 125 mm (4.92 inches), dimensions in mm (inch)

Thermowell calculation

Properly applied load diagrams will provide a sufficient degree of security for the thermowell dimensioning of most applications.

However, there are cases in which operating conditions deviate too greatly from standard parameters. In this case, a customized thermowell calculation can be displayed.

Another reason for doing this calculation is the fact that flowing media can create turbulence at the tip of the thermowell under certain conditions. The thermowell will then vibrate and may even be destroyed if not configured correctly. This is the most frequent cause of thermowell failure.

Siemens can offer thermowell calculations according to the two recognized procedures upon request.

- Dittrich/Klotter method
- ASME PTC19.3-TW2016 method

  This method also computationally accounts for turbulence formation, among other things.

Both methods provide a high degree of security with regard to thermowell configuration; however, they do not provide a guarantee against failures. A recalculation may be necessary in case of changes to the process parameters.

Materials

With regard to areas of application, the materials AISI 316Ti and 316L (1.4571 and 1.4404) have practically the same properties. For this reason, our offering of 1.4571 is limited, for protective tube shapes 3F and 4/4F, for example. For more detailed technical specifications, please see our SiePortal.

Material descriptions/Standards comparison				Max. temperature [°C (°F)] (unloaded)	Properties	Applications
Material no.	**AISI/Trade name:**	**EN 10028-2:**	**Description**			
1.4404 or 1.4435	AISI 316L	X2CrNiMo18-14-3	Austenitic stainless steel	550 (1 022)	Very good corrosion resistance, good weldability	Chemical industry, waste treatment, paper and cellulose industry, food industry
1.4571	AISI 316 Ti	X6CrNiMoTi1712-2	Austenitic stainless steel	550 (1 022)	High corrosion resistance, good weldability	Chemical industry, textile industry, paper and cellulose industry, water supply, food and pharmaceuticals
1.5415	A 204 Gr.A	16Mo3	Carbon steel, high-alloy	500 (932)	Resistant at higher temperatures, well suited for welding	Steam turbines, steam lines, water pipes
1.7335	A 182 F11	13CrMo4-5	Carbon steel, high-alloy	540 (1 004)	Resistant at higher temperatures, well suited for welding	Steam turbines, steam lines, water pipes

© Siemens AG 2025

Configuration (continued)

Material descriptions/Standards comparison				Max. temperature [°C (°F)] (unloaded)	Properties	Applications
Material no.	AISI/Trade name:	EN 10028-2:	Description			
1.4841	SS 314	X15CrNiSi25-20	Austenitic heat-resistant stainless steel	1 100 (2 012)	Resistant at high temperatures, also resistant against low-oxygen gasses and gasses containing nitrogen.	Flue gasses, petrochemical industry, chemicals industry, power plants
1.4762	446	X10CrAl24	Ferritic heat-resistant steel	1 100 (2 012)	Resistant at high temperatures, in oxidizing and reducing sulfur-containing atmosphere	Chemical industry, power plants, steel industry, waste gas treatment
2.4819	Hastelloy C 276	NiMo16Cr15W	Nickel-Chrome-Molybdenum alloy	1 100 (2 012)	Resistant at high temperatures, in oxidizing and reducing atmosphere, resistant against pitting and crevice corrosion, good corrosion resistance after welding	Chemicals industry, paper and cellulose industry, waste treatment, waste incinerators, emissions controls, shipbuilding and offshore industry
2.4360	Monel 400	NiCu30Fe	Nickel-copper alloy	500 (932)	Excellent corrosion resistance, particularly against chloride-induced cold crack corrosion	Chemical industry, offshore industry, nuclear technology, petrochemical industry
Similar to 1.0305	A105		Carbon steel	400 (752)		Steam turbines, steam lines, water pipes
1.4410	Similar to A2507	X2CrNiMoN 22-7-4	Austenitic-ferritic super duplex steel	300 (572)	Excellent resistance especially to chloride-related gap and pitting corrosion	Chemical Industry and petroleum chemistry, seawater desalination plants, paper pulp industry
1.4462	Similar to AISI 318 LN	X2CrNiMoN22-5-3	Austenitic-ferritic duplex steel	250 (482)	Resistance especially to chloride-related gap and pitting corrosion	Chloride contaminated water, acidic gas conditions, petrochemicals, marine technology

Where cost-intensive materials are used with flange thermowells, cost savings can be achieved by using a so-called flanged wheel. A thin disk of the material which comes into contact with media is applied prior to the flange (ordinary stainless steel).

Materials of sensor pipe/measuring insert:

- SITRANS TSinsert, TS200 Compact
  - Resistance thermometer Cr-Ni-Mo
  - Thermocouple 2.4816/Inconel600

Vibration resistance of measuring insert, cable sensor

Similar to the thermowell, the equipment also creates inner (Karman vortices) and outer vibration inducements which act on the measuring insert. For this reason, a special assembly of measurement elements is required. Other than a few exceptions for cable and compact thermometers, Siemens only produces sensors with a mineral-insulated plastic-sheathed cable. Together with precautions taken when installing the measuring element, the Siemens basic version already exceeds EN 60751 by more than a factor of 3. Pursuant to the measurement methods of this standard, the following values are obtained (tip-tip):

- 10 g: Basic version and expanded measuring range
- 60 g: Increased vibration resistance and thermocouple

Bending ability of measuring insert/cable sensor

All Siemens SITRANS TSinsert measuring inserts are made with a mineral-insulated plastic-sheathed cable (MIC). The same applies to a portion of the cable and compact thermometer. In addition to the already described properties, another advantage of the plastic-sheathed cable is its bending ability. This makes it possible to install these thermometers even in mounting locations that are difficult to access. Ensure that the following minimum bending radius is observed:

MIC diameter [mm] (inch)	R_{max} = 4x MIC diameter [mm] (inch)
3 (0.12)	12 (0.48)
6 (0.24)	24 (0.95)

Where a smaller bending radius is required due to installation conditions, subsequent testing of the insulation resistance is recommended.

The bending ability of the mineral-insulated design allows for economical transport even of large lengths. As of a length of 0.8 m, the sensors can be delivered rolled or bent. If slight bends have arisen due to mechanical loads during transport or handling, the quality and function of the sensor are not impacted by this. The bends can easily be straightened.

Electrical stability

Insulation resistance

The insulation resistance between each measuring circuit and the fitting is tested at a voltage of 500 V DC at room temperature.

$R_{iso} \geq 100$ MΩ

Due to the property of the mineral-insulated cable, the insulation resistance decreases as temperature increases. Because of the special production method, however, it is possible to achieve very good values even at high temperatures.

Wire resistance

For 2-wire connections, the wire resistance is considered in the measurement result. The following rule of thumb can be used:

- Measuring insert diameter 3 mm (0.12 inches) 5 Ω/m or 12.8 °C (55.04 °F)
- Measuring insert diameter 6 mm (0.24 inches) 2.8 Ω/m or 7.1 °C (44.78 °F)

Therefore, a 3 or 4-wire connection is urgently recommended.

© Siemens AG 2025

Configuration (continued)

Tests

In addition, statutory, standards-based or operating specifications also require additional testing. The results are attested in certificates according to EN 10204:

- According to EN 10204-2.1, order conformity (C35)
  Certificate in which Siemens confirms that the delivered products correspond to the requirements of the order, without specification of test results. The testing does not have to be carried out on the delivered devices.
- According to EN 10204-3.1
  Certificate in which Siemens confirms that the delivered products meet the requirements set out in the order, with indication of the specified values. Testing is carried out by an organization which is independent of production. The inspection certificate 3.1 replaces 3.1.B of the previous edition.
- Material certificate for parts which come into contact with media (C12)
  This certificate confirms the properties of the material and guarantees traceability up to the melting batch.
- Pressure test (C31)
  Hydrostatic pressure test on thermowell. Internal pressure for thread and weld-in, external pressure for flange forms.
- Helium leak test (C32)
  This test can be used to detect even the smallest leaks in thermowells and weld seams.
- Dye-penetration test (C33)
  The color penetration method can detect tears and other surface defects.
- Comparative test (calibration) (Y33)
  The test object is measured in one temperature direction against a highly precise thermometer, and the measured values of test object and normal object are documented. However, calibration requires the measuring insert to be of a certain minimum length. Measuring inserts can be calibrated together with the associated transmitter. Calibration values can be stored in the transmitter in order to increase the measuring accuracy of the system.
- According to EN 10204-3.2
  This type of acceptance certificate can be prepared on request, together with an acceptance representative of the ordering party or a representative indicated by official requirements (e.g. TÜV). It confirms that the delivered products meet the requirements set out in the order; it also contains the test results.
- Welding documentation
  Documentation such as WPS and PQR is available on our website.

Approvals

Explosion protection

Due to the variety of requirements, all flameproof versions, as well as those complying with CSA and FM, are supplied without cable glands. The Ex markings can be found in the current manual A5E03920348, section "Certificates and approvals".

Designator	Additional information	Region	Standard	Type of protection	For Zone	For Division
TSinsert TS200 Compact	E00	EU/AU/NZ	CE/RCM	Without Ex protection		-
	E17	US/CA	cCSAus			-
	E54	CN				-
	E80	EAC	TR			-
	E01	EU/AU/NZ	ATEX, IECEx	Intrinsic safety "i"/"IS"	0...2/20...22	-
	E18	US/CA	cCSAus		0...2/20...22	1/2
	E55	CN	NEPSI		0...2/20...22	-
	E81	EAC	EACEx		0...2/20...22	-
TS500	E00	EU/AU/NZ	CE/RCM	Without Ex protection		-
	E10	US/CA	cFMus			-
	E17	US/CA	cCSAus			-
	E54	CN				-
	E80	EAC	TR			-
	E01	EU/AU/NZ	ATEX, IECEx	Intrinsic safety "i"/"IS"	0*...2/20*...22	-
	E18	US/CA	cCSAus		0*...2/20*...22	1/2
	E55	CN	NEPSI		0*...2/20*...22	-
	E81	EAC	EACEx		0*...2/20*...22	-
	E03	EU/AU/NZ	ATEX, IECEx	Flameproof enclosure "d"/"XP"	0*...2/20*...22	-
	E13 (7MC750, NPT only)	US/CA	cFMus	dust protection through enclosure "t"/"DIP" only with connection heads code AG0, AH0, AU0, AV0	1/21	1/2 (aluminum head)
	E14 (metric)	US/CA	cFMus		1/21	1/2 (aluminum head)
	E20 (NPT)	US/CA	cCSAus		0*...2/20*...22	1/2
	E21 (metric)	US	CSAus		0*...2/20*...22	-
	E56	CN	NEPSI		0*...2/20*...22	-
	E82	EAC	EACEx		0*...2/20*...22	-
	E04	EU/AU/NZ	ATEX, IECEx	Non-sparking "ec"	2	-
	E16	US/CA	cFMus	Non-sparking "nA"/"NI"	2	-

© Siemens AG 2025

Configuration (continued)

Designator	Additional information	Region	Standard	Type of protection	For Zone	For Division
TS500	E23	US/CA	cCSAus	Non-sparking "nA"/"NI"	2	2
	E57	CN	NEPSI		2	-
	E83	EAC	EACEx		2	-
	AU = Australia; CA = Canada; CN = China; EAC = Eurasian Customs Union; EU = Europe; US = USA					

* Zone 0 to process connection, outside Zone 1

Marine approvals

Designator	Additional information	Approval
TSinsert **TS200 Compact** **TS500**	D01	Det Norske Veritas Germanischer Lloyd (DNV GL)

© Siemens AG 2025

Circuit diagrams

Resistance thermometer connection

SITRANS TSinsert measuring inserts are, unless otherwise mentioned, designed as single Pt100 measuring inserts with a 4-wire connection.

This makes it possible to implement all of the aforementioned connection types.

Double Pt100 measuring inserts (only possible with 6 mm outer diameter) are designed as 3-wire connection.

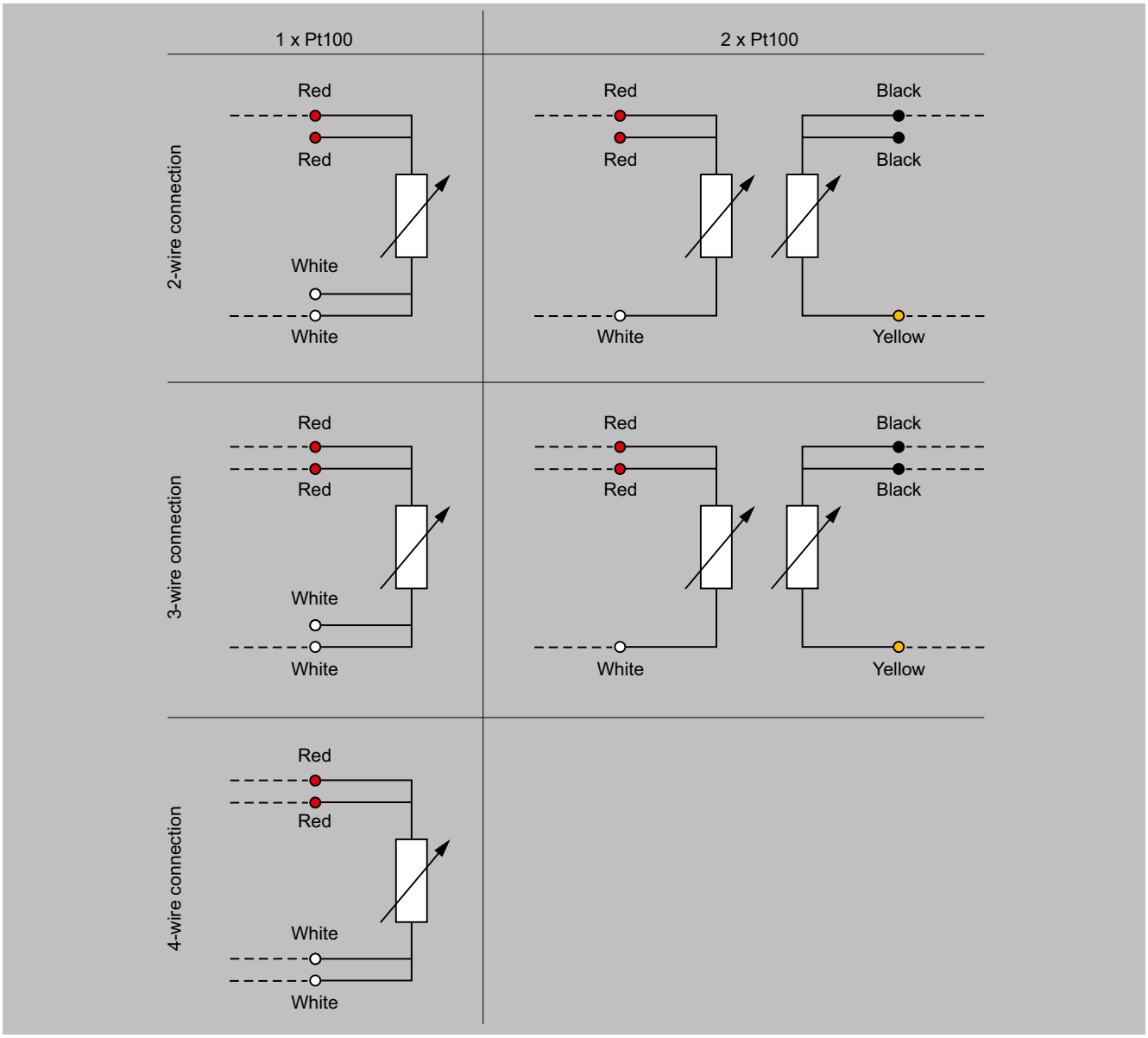

Circuit diagrams 1 x Pt100-2W to 2 x Pt100-4W

© Siemens AG 2025

Circuit diagrams (continued)

Thermocouple connection

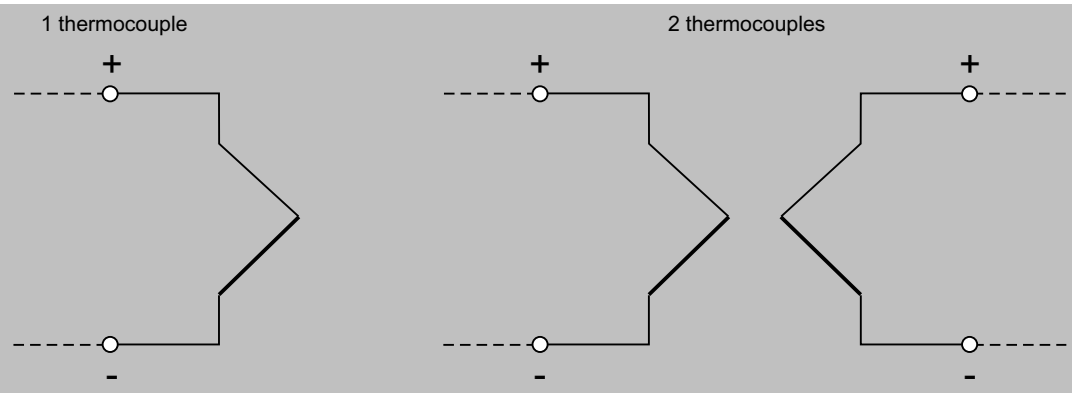

Type	+	-
J	Black	White
K	Green	White
N	Pink	White
E	Purple	White
T	Brown	White

Circuit diagram for thermocouple

If thermocouples are used, the use of head-mounted transmitters offers particular advantages: The reference junction is already integrated in the universal transmitter. There is no need for expensive extension or compensating cables. This also removes a number of possible error sources. The weak millivolt signal of the thermocouple is already converted into a stable and temperature-linear DC or bus signal on site. This drastically reduces the effects of electromagnetic factors on the measurement result.

If a head-mounted transmitter is not installed, the sensor supply cable consists of the appropriate extension or compensating cable. The thermo line is made from the thermocouple material of the relevant thermocouple, while the compensating cable uses a cost-effective substitute material. The electrical behavior of the compensating cable is similar to that of the thermo line within a limited temperature range of up to 200 °C.

A wide spectrum of color coding exists for thermocouples on an international level. This must be taken into account during the connecting process.

Country	International/Germany			North America			UK/Czech Republic		
Standard	Not intrinsically safe[1]			Compensating cable[2]			BS 1843		
	Jacket	+	-	Jacket	+	-	Jacket	+	-
N	PN	PN	WH	OG	OG	RD	OG	OG	BU
K	GN	GN	WH	YE	YE	RD	RD	BR	BU
J	BK	BK	WH	BK	WH	RD	BK	YE	BU
T	BR	BR	WH	BU	BU	RD	BU	WH	BU
E	VT	VT	WH	VT	VT	RD	BR	BR	BU
R+S	OG	OG	WH		BK	RD	GN	WH	BU
B	GY	GY	WH	GY	GY	RD	-	-	-

1) For intrinsically safe cable as per IEC 584-3, the jacket is always blue.
2) With thermo lines as per ANSI MC96, the jacket is always blue.

© Siemens AG 2025

Circuit diagrams (continued)

Country	Netherlands			Japan			France		
Standard	DIN 43714			ISC 1610-198			NF C42-323		
	Jacket	+	-	Jacket	+	-	Jacket	+	-
N	-	-	-	-	-	-	-	-	-
K	GN	RD	GN	BU	RD	WH	VT	VT	YE
J	BU	RD	BU	YE	RD	WH	BK	BK	YE
T	BR	RD	BR	BR	RD	WH	BU	BU	YE
E	BK	RD	BK	VT	RD	WH	OG	OG	YE
R+S	WH	RD	WH	BK	RD	WH	GN	GN	YE
B	GY	RD	GY	GY	RD	WH	-	-	-

Abbreviation for colors				
BK: black	BR: brown	BU: blue	GD: gold	GN: green
GY: gray	OG: Orange	PN: pink	RD: red	SR: silver
TQ: turquoise	VT: Violet	WH: white	YE: yellow	

Device plug

In some cases, sensors are not connected directly but using device plugs. The connection is made according to the figures below.

Lemo 1S coupling (SITRANS TS200 Compact)

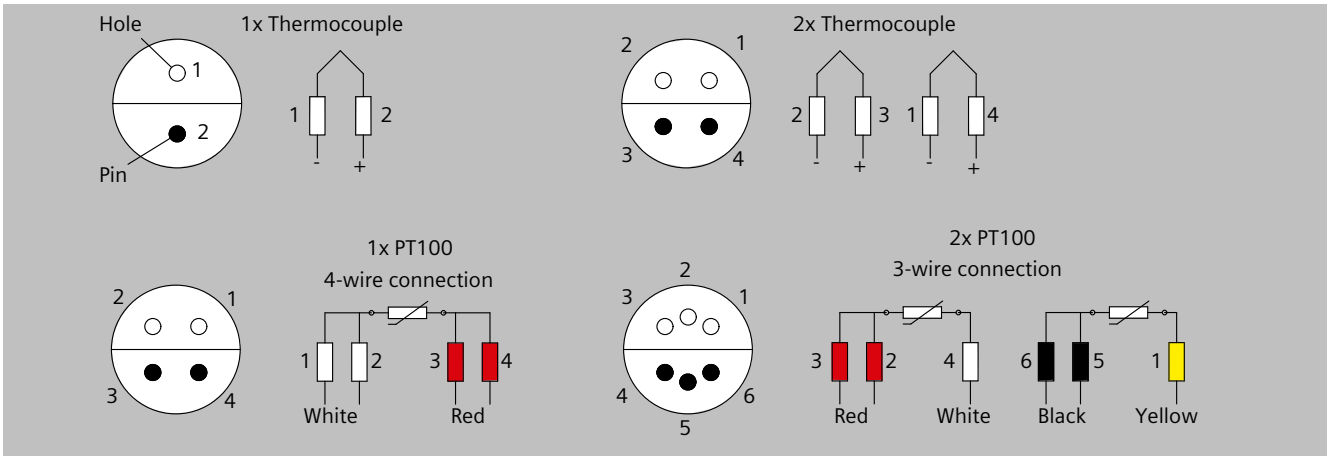

© Siemens AG 2025

Circuit diagrams (continued)

M12 device plug for single sensors (SITRANS TS200 Compact/TS500)

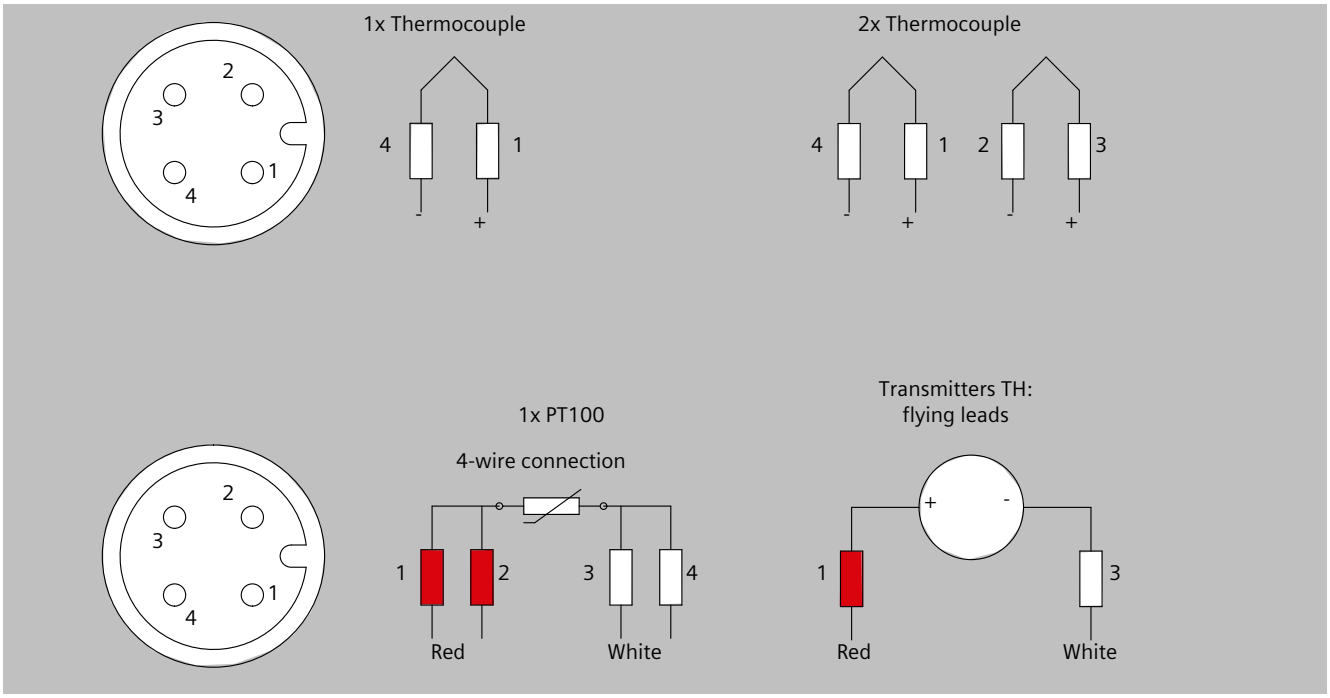

Connections for SITRANS TS200 IO-Link

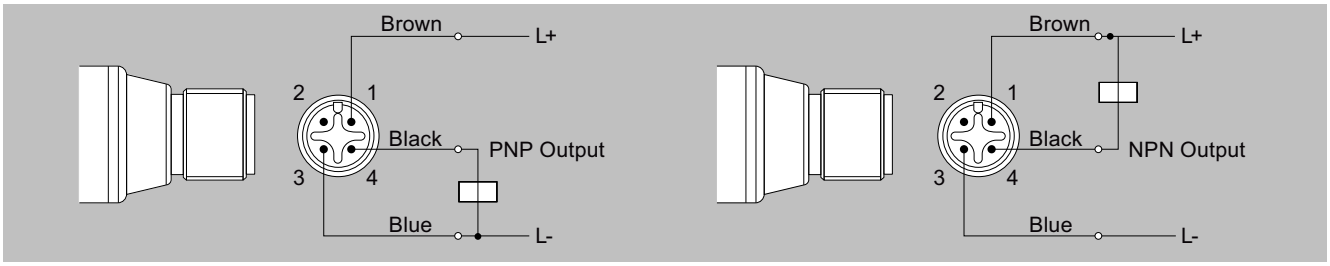

Operating mode with switchable output (SIO)

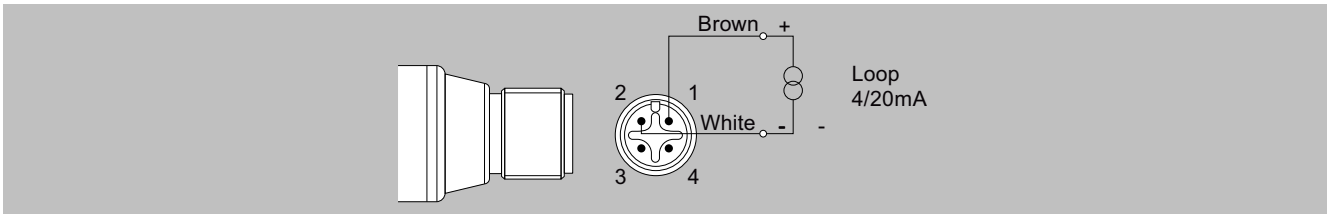

Operating mode 4...20 mA (loop-powered)

© Siemens AG 2025

Circuit diagrams (continued)

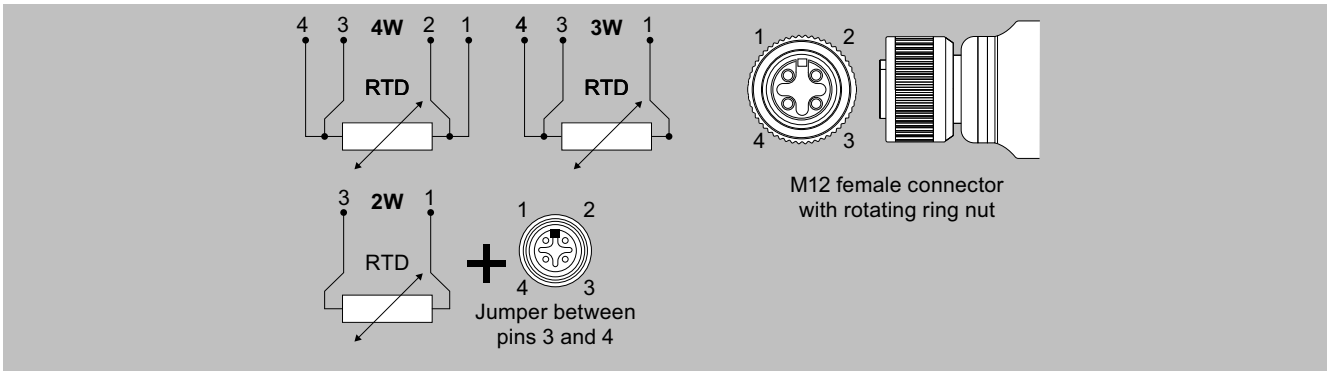

Assignment of the pins for the Pt100 plug (only for models 7MC7216-0AC00-0AA0 and 7MC7216-0AD00-0AA0)

M12 device plug for single sensors (SITRANS TS300)

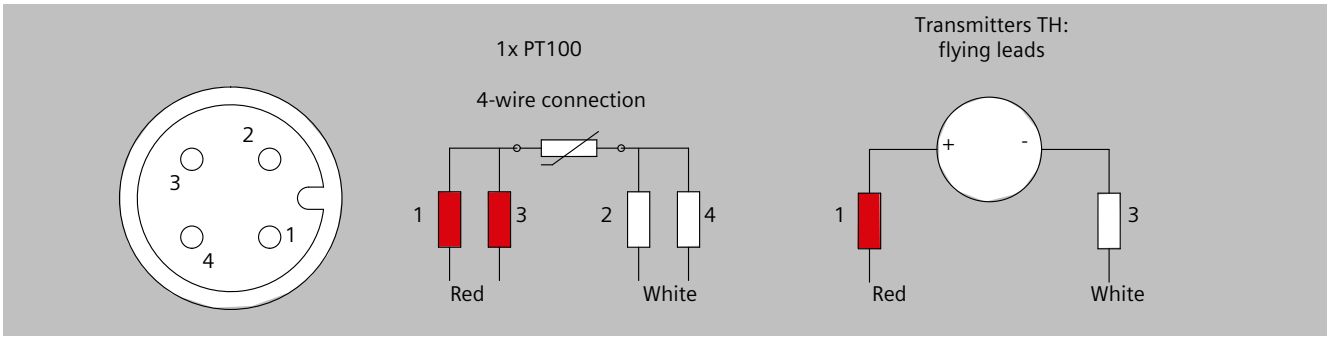

Han 7D device plug (SITRANS TS500)

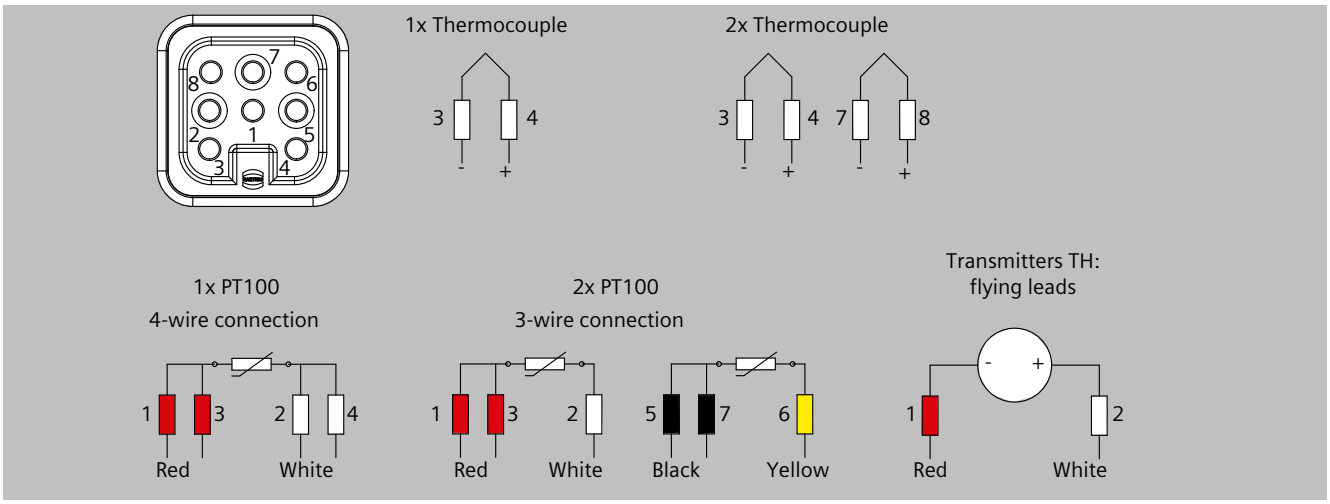

Transmitter connection

If SITRANS TH transmitters are used in the connection head of the temperature sensor, they are already wired on the sensor side. On the output side, the terminals for plus (1) and minus (2) are marked on the device.

© Siemens AG 2025

Circuit diagrams (continued)

Transmitter SITRANS TH

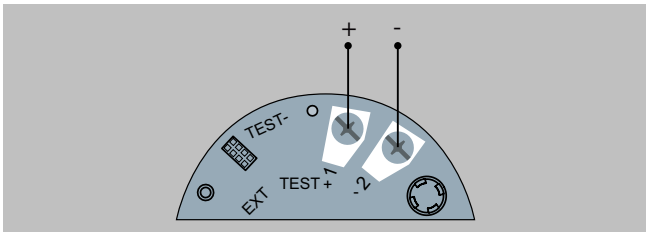

SITRANS TH100/320/420 connection diagram

Display with local operation TS500

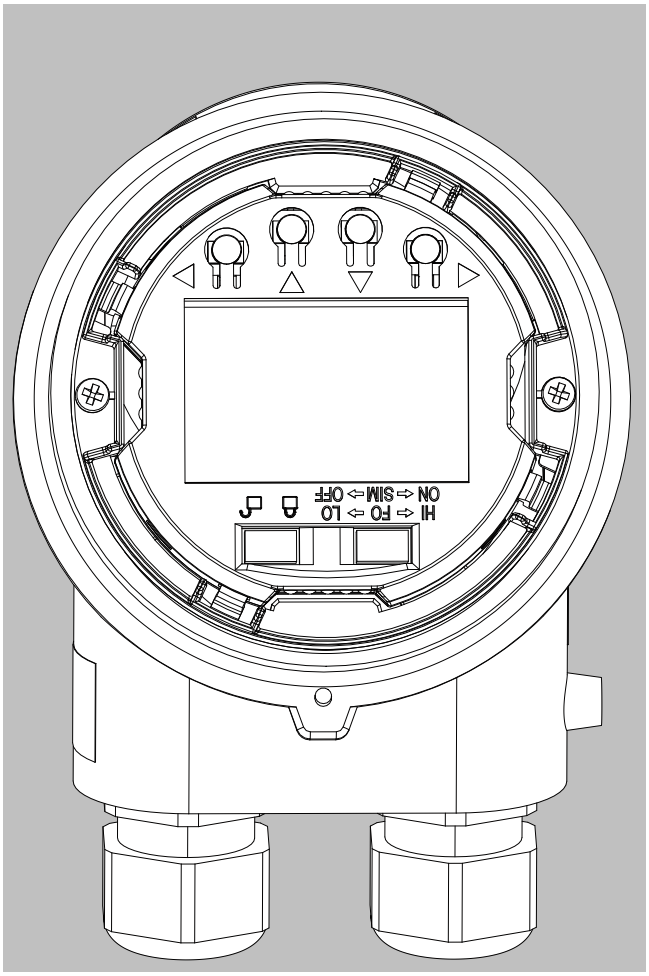

An optional local display is connected to the SITRANS TH320 and TH420 transmitter via a plug. It communicates process and diagnostic data directly from the transmitter. The display can be removed without tools for convenient wiring and can be rotated in 90° increments. 4 ... 20 mA HART and PROFIBUS PA transmitters can also be conveniently configured with 4 control keys.

In addition, our transmitters also allow for a large number of other possible connections (e.g. difference, mean value, 2 sensors). More information can be obtained at:

http://www.siemens.com/temperature

© Siemens AG 2025

Overview

Type	TSinsert
Description	Measuring inserts
Application	Replaceable
Version	Mineral-insulated version
Type	As European or American type
Figure	
Article No.	7MC70*
Wetted material	Cr-Ni-Mo (RTD); 2.4816 (TC) (Cr-Ni-Mo; Inconnel600)
Thermowell forms	Order separately
Process connections	-
Sensor elements	Pt100 + thermocouples
Sensor connection	• 1 × 4-wire • 2 × 3-wire • 2 × 4-wire
Sensor accuracy	• Class AA • Class A • Class B • Class 1 • Class 2
Connection heads	Type B (Type A flameproof)
Explosion protection (EU, CN, EAC, AU, NZ, US, CA)	Intrinsic safety "i"/"IS"
Output signal	Sensor signal: • 4 ... 20 mA (TH100/TH200) • HART (TH300) • PA (TH400) • FF (TH400)
Application	Spare parts
Limit temperatures[1] [°C (°F)]	• Pt100 basic: -50 ... +400 °C (-58 ... +752 °F) • Pt100 expanded measuring range: -196 ... +600 °C (-321 ... +1112 °F) • Thermocouple: -40 ... +1 100 °C (-40 ... +2012 °F) (type dependent)
Max. nominal pressure[1] (static pressure at 20 °C)	-
Min. response time $t_{0.5}$	2 ... 6 s
Degree of protection	IP54

[1] Load combinations (temperature, flow, vibration, pressure) can at times significantly restrict these values. Additional temperature limits result, for example, from thermowell materials with lower limits [e.g. 1.4571 pressure resilient, 450 .... 550 °C (842 ... 1022 °F), limit temperature 800 °C (1472 °F)].

Type	TS200 IO-Link	TS200 Compact
Description	Temperature sensors in compact version with integrated 4 ... 20 mA/IO-Link temperature transmitter	Temperature sensors in compact version
Application	Universal use	Universal use
Version	Mineral-insulated version	Mineral-insulated version
Type	For cramped spaces	For cramped spaces
Figure		

© Siemens AG 2025

Overview (continued)

Type	TS200 IO-Link	TS200 Compact
Article No.	7MC7216-*	7MC7212-*
Wetted material	316L/1.4404	Cr-Ni-Mo (RTD); 2.4816 (TC) (Cr-Ni-Mo; Inconnel600)
Thermowell forms	Without/with separate thermowell (accessories)	Without/with separate thermowell
Process connections	• Compression fittings (accessories) • Soldering nipple: - G ¼, G 1/8 - ¼, 1/8 NPT • Union nut M10×1.0 • Surface connection piece for installation on flat surfaces/pipes as accessories	• Compression fittings • Soldering nipple: - G ¼, G ½ - ½ NPT - M8 × 1, M18 × 1.5 • Surface connection piece for installation on flat surfaces/pipes
Sensor elements	Pt100 + Pt1000 (external only)	Pt100 + thermocouples
Sensor connection	• External sensor: 1 × 2-/3-/4-wire • Integrated sensor: 1 × 4-wire	• 1 × 4-wire • 2 × 3-wire
Sensor accuracy	Integrated sensor: Class A	• Class AA • Class A • Class B • Class 1 • Class 2
Connection heads	M12×1 connection, plastic or stainless steel enclosure	• Flying leads • Miscellaneous plugs • Optional connecting cable (M12)
Explosion protection (EU, CN, EAC, AU, NZ, US, CA)	n/a	Intrinsic safety "i"/"IS"
Output signal	• Analog output: 4 ... 20 mA, or • Digital output: IO-Link or PNP or NPN (SIO)	Sensor signal
Application	• Mechanical engineering • Storage temperature • Surfaces	• Mechanical engineering • Storage temperature • Surfaces
Limit temperatures[1] [°C (°F)]	• Pt100/ Pt1000 external: -200 ... +800 °C (-xx... +xx °F) • Pt100 integrated: -50 ... +110/120/500 °C (-xx ... +xx °F), depending on selected type	• Pt100 basic: -50 ... +400 °C (-58 ... +752 °F) • Pt100 expanded measuring range:-196 ... +600 °C (-321 ... +1112 °F) • Thermocouple: -40 ... +1 100 °C (-40 ... +2012 °F) (type dependent)
Max. nominal pressure[1] (static pressure at 20 °C)	100 bar @ ambient temperature in variants with integrated process connection 7MC7216-5*A**-0AA0 und 7MC7216-5*B**-0AA0	Compression fitting max. 5 bar (73 psi) Compression fitting: PTFE gasket, temperature min./max. -20 ... +150 °C (-4 ... +302 °F)
Min. response time $t_{0.5}$	< 3.5 s (3 mm), < 5 s (4.4 mm) < 13 s (6 mm)	2 ... 6 s
Degree of protection	IP67, IP69K	See drawing in "Temperature sensors" - "Structure"

[1] Load combinations (temperature, flow, vibration, pressure) can at times significantly restrict these values. Additional temperature limits result, for example, from thermowell materials with lower limits [e.g. 1.4571 pressure resilient, 450 .... 550 °C (842 ... 1022 °F), limit temperature 800 °C (1472 °F)].

Type	TS300 Modular	TS300 Clamp-on
Description	Temperature sensors for food, pharmaceuticals and biotechnology	Temperature sensors for food, pharmaceuticals and biotechnology
Application	Measurements immersed in medium (pipes and vessels)	Clamp-on measurement of pipe surface temperature
Version	Thermowell similar to DIN 43772, type 2F and tapered design	Thermowell similar to DIN 43772, type 2F and tapered design
Type		

© Siemens AG 2025

Overview (continued)

Type	TS300 Modular	TS300 Clamp-on
Figure		
Article No.	7MC8005*	7MC8016
Wetted material	1.4404 or 1.4435 (316L)	1.4404 or 1.4435 (316L)
Thermowell forms	Similar to 2F	Similar to 2F
Process connections	DIN 11851, clamp-on connection (Tri-Clamp/ISO 2852/DIN 32676), Varivent, Ingold socket (Fermenter connection), Neumo Biocontrol, spherical weld-in sleeve Seals are not included in the scope of delivery	Clamp-on connections suitable for the following pipe diameters: • Collar 4 ... 57 mm (0.16 ... 2.24 inches) • Clamping band 50 ... 200 mm (1.97 ... 7.87 inches)
Sensor elements	Pt100	Pt100
Sensor connection	• 1 × 4-wire • 2 × 3-wire	• 1 × 3-wire
Sensor accuracy	Class A	Class A
Connection heads	Type B	Type B
Explosion protection (EU, CN, EAC, AU, NZ, US, CA)	-	-
Output signal	Sensor signal: • 4 ... 20 mA (TH100/TH200) • HART (TH300) • PA (TH400) • FF (TH400)	Sensor signal: • 4 ... 20 mA SITRANS TH100 Slim • HART (TH300) • PA (TH400) • FF (TH400)
Application	Surface roughness: Standard applications Ra < 1.5 µm (5.9 10^{-5} inches)	Surface roughness: Standard applications Ra < 1.5 µm (5.9 10^{-5} inches)
Limit temperatures[1] [°C (°F)]	-20 ... +400 °C (-4 ... +752 °F)	-40 ... +150 °C (-40 ... +302 °F)
Max. nominal pressure[1] (static pressure at 20 °C) Dimensions in mm (inch)	0 ... 150 (0 ... 5.91), at 50 bar 150 ... 300 (5.91 ... 11.81), at 40 bar	No pressure load due to clamp-on design
Min. response time $t_{0.5}$	20 ... 34 s	4 s (see "Reference conditions SITRANS TS300 Clamp-on")
Degree of protection	IP54 ... IP68 depending on connection head	IP65 for pipe collar, IP67 for electrical connection

[1] Load combinations (temperature, flow, vibration, pressure) can at times significantly restrict these values. Additional temperature limits result, for example, from thermowell materials with lower limits (e.g. 1.4571 pressure resilient, 450 .... 550 °C (842 ... 1022 °F), limit temperature 800 °C (1472 °F)).

Type	TS500 for installation	TS500 Type 2	TS500 Type 2N
Description	Temperature sensors for the process industry (pipes and vessels)	Temperature sensors for the process industry (pipes and vessels)	Temperature sensors for the process industry (pipes and vessels)
Application	Temperature sensors for installation in existing thermowells	Tubular thermowell for low to medium stress	Tubular thermowell for low to medium stress
Version	Suitable for thermowells according to DIN 43772 as well as ASME B40.9-2001	Thermowell according to DIN 43772, type 2, without process connection	Thermowell type 2N similar to DIN 43772, screwed design
Type	With extension • European type • American type	• Without extension, plug-in • Use with moveable compression fittings	Without extension

© Siemens AG 2025

Overview (continued)

Type	TS500 for installation	TS500 Type 2	TS500 Type 2N
Figure		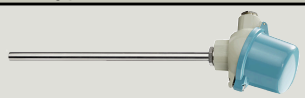	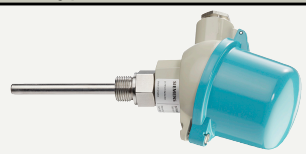
Article No.	No. 7MC750*	7MC751*-0*(A/B)**-0***	7MC751*-1****-0***
Wetted material	None: Measuring insert made of 1.4571, 1.4404 or 1.4435 (RTD); 2.4816 (TC) (316L; Inconnel600)	1.4404 or 1.4435 (316L)	1.4404 or 1.4435 (316L)
Thermowell forms	Order separately	Form 2	Form 2N (similar to Form 2)
Process connections	Connection to the thermowell: • M14 × 1.5 • M18 × 1.5 • G ½ • ½ NPT	Compression fittings • G ½ • ½ NPT For welding	• G ½ • ½ NPT
Installation length	• 110 mm (4.33 inches) • 140 mm (5.51 inches) • 200 mm (7.87 inches) • 260 mm (10.24 inches) • 410 mm (16.14 inches)	Variable	• 100 mm (3.94 inches) • 160 mm (6.30 inches) • 230 mm (9.06 inches) • 360 mm (14.17 inches) • 510 mm (20.08 inches)
Neck pipe length	According to DIN 43772	According to DIN 43772	Non-adjustable X=20 mm (0.79 inches)
Sensor elements	Pt100 + thermocouples	Pt100 + thermocouples	Pt100 + thermocouples
Sensor connection	• 1 × 4-wire • 2 × 3-wire • 2 × 4-wire	• 1 × 4-wire • 2 × 3-wire • 2 × 4-wire	• 1 × 4-wire • 2 × 3-wire • 2 × 4-wire
Sensor accuracy	• Class AA • Class A • Class B • Class 1 • Class 2	• Class AA • Class A • Class B • Class 1 • Class 2	• Class AA • Class A • Class B • Class 1 • Class 2
Connection heads	Type B (Type A flameproof)	Type B (Type A flameproof)	Type B (Type A flameproof)
Explosion protection (EU, CN, EAC, AU, NZ, US, CA)	• Intrinsic safety "i"/"IS" • Flameproof enclosure "d"/"XP" • Non-sparking "ec"/"nA"/"NI"	• Intrinsic safety "i"/"IS" • Flameproof enclosure "d"/"XP" • Non-sparking "ec"/"nA"/"NI"	• Intrinsic safety "i"/"IS" • Flameproof enclosure "d"/"XP" • Non-sparking "ec"/"nA"/"NI"
Output signal	Sensor signal: • 4 ... 20 mA • HART standard • HART hot backup • PROFIBUS PA hot backup	Sensor signal: • 4 ... 20 mA • HART standard • HART hot backup • PROFIBUS PA hot backup	Sensor signal: • 4 ... 20 mA • HART standard • HART hot backup • PROFIBUS PA hot backup
Application	Pipes and vessels	Pipes and vessels	Pipes and vessels
Limit temperatures[1] [°C (°F)]	• Pt100 basic: -50 ... +400 °C (-58 ... +752 °F) • Pt100 expanded measuring range: -196 ... +600 °C (-321 ... +1112 °F) • Thermocouple: -40 ... +1 100 °C (-40 ... +2 012 °F) (type dependent)	• Pt100 basic: -50 ... +400 °C (-58 ... +752 °F) • Pt100 expanded measuring range: -196 ... +600 °C (-321 ... +1112 °F) • Thermocouple: -40 ... +1 100 °C (-40 ... +2012 °F) (type dependent)	• Pt100 basic: -50 ... +400 °C (-58 ... +752 °F) • Pt100 expanded measuring range: -196 ... +600 °C (-321 ... +1112 °F) • Thermocouple: -40 ... +1 100 °C (-40 ... +2012 °F) (type dependent)

© Siemens AG 2025

Overview (continued)

Type	TS500 for installation	TS500 Type 2	TS500 Type 2N
Max. nominal pressure[1] (static pressure at 20 °C) Dimensions in mm (inch)	See thermowell	Pipe diameter 9 (0.35): • 0 ... 150 (0 ... 5.91), at 50 bar • 150 ... 300 (5.91 ... 11.81), at 40 bar • Compression fitting, at 5 bar Pipe diameter 12 mm (0.47 inches): • 0 ... 150 (0 ... 5.91), at 75 bar • 150 ... 300 (5.91 ... 11.81), at 60 bar • Compression fitting, at 5 bar: PTFE gasket, temperature min./max. -20 ... +150 °C (-4 ... +302 °F)	Pipe diameter 9 (0.35): • 0 ... 150 (0 ... 5.91), at 50 bar • 150 ... 300 (5.91 ... 11.81), at 40 bar
Min. response time $t_{0.5}$	See thermowell	20 ... 45 s	20 ... 34 s
Degree of protection	IP54 ... IP68 depending on connection head	IP54 ... IP68 depending on connection head	IP54 ... IP68 depending on connection head

[1] Load combinations (temperature, flow, vibration, pressure) can at times significantly restrict these values. Additional temperature limits result, for example, from thermowell materials with lower limits (e.g. 1.4571 pressure resilient, 450 .... 550 °C (842 ... 1022 °F), limit temperature 800 °C (1472 °F)).

Type	TS500 Type 2G	TS500 Type 2F	TS500 Type 3
Description	Temperature sensors for the process industry (pipes and vessels)	Temperature sensors for the process industry (pipes and vessels)	Temperature sensors for the process industry (pipes and vessels) Faster response than Form 2
Application	Tubular thermowell for low to medium stress	Tubular thermowell for low to medium stress	Tubular thermowell for low to medium stress
Version	Thermowell according to DIN 43772, type 2G, screwed design	Thermowell according to DIN 43722, type 2F with flange	Thermowell according to DIN 43722, type 3 without process connection, improved response time
Type	With extension	With extension	• Without extension, plug-in • Use with moveable compression fittings
Figure			
Article No.	7MC751*-1*(A/B)**-1***	7MC751*-2*(A/B)**-1***	7MC751*-0*K**-0***
Wetted material	1.4404 or 1.4435 (316L)	1.4404 or 1.4435 (316L)	1.4404 or 1.4435 (316L)
Thermowell forms	Form 2G	Form 2F	Form 3
Process connections	Screw-in thread welded on: • G 1 • G ½ • ½ NPT	Welded flange • DN 25, PN10 ... 40 • 1RF150 • 1.5RF150 • 1.5RF300	Compression fittings • G ½ • ½ NPT For welding
Installation length	• 160 mm (6.30 inches) • 250 mm (9.84 inches) • 400 mm (15.75 inches)	• 225 mm (8.86 inches) • 315 mm (12.40 inches) • 465 mm (18.31 inches)	• 225 mm (8.86 inches) • 315 mm (12.40 inches) • 465 mm (18.31 inches)
Neck pipe length	According to DIN 43772	According to DIN 43772	According to DIN 43772
Sensor elements	Pt100 + thermocouples	Pt100 + thermocouples	Pt100 + thermocouples
Sensor connection	• 1 × 4-wire • 2 × 3-wire • 2 × 4-wire	• 1 × 4-wire • 2 × 3-wire • 2 × 4-wire	• 1 × 4-wire • 2 × 3-wire • 2 × 4-wire
Sensor accuracy	• Class AA • Class A • Class B • Class 1 • Class 2	• Class AA • Class A • Class B • Class 1 • Class 2	• Class AA • Class A • Class B • Class 1 • Class 2
Connection heads	Type B (Type A flameproof)	Type B (Type A flameproof)	Type B (Type A flameproof)

© Siemens AG 2025

Overview (continued)

Type	TS500 Type 2G	TS500 Type 2F	TS500 Type 3
Explosion protection (EU, CN, EAC, AU, NZ, US, CA)	• Intrinsic safety "i"/"IS" • Flameproof enclosure "d"/"XP" • Non-sparking "ec"/"nA"/"NI"	• Intrinsic safety "i"/"IS" • Flameproof enclosure "d"/"XP" • Non-sparking "ec"/"nA"/"NI"	• Intrinsic safety "i"/"IS" • Flameproof enclosure "d"/"XP" • Non-sparking "ec"/"nA"/"NI"
Output signal	Sensor signal: • 4 ... 20 mA • HART standard • HART hot backup • PROFIBUS PA hot backup	Sensor signal: • 4 ... 20 mA • HART standard • HART hot backup • PROFIBUS PA hot backup	Sensor signal: • 4 ... 20 mA • HART standard • HART hot backup • PROFIBUS PA hot backup
Application	Pipes and vessels	Pipes and vessels	Pipes and vessels
Limit temperatures[1] [°C (°F)]	• Pt100 basic: -50 ... +400 °C (-58 ... +752 °F) • Pt100 expanded measuring range: -196 ... +600 °C (-321 ... +1112 °F) • Thermocouple: -40 ... +1 100 °C (-40 ... +2012 °F) (type dependent)	• Pt100 basic: -50 ... +400 °C (-58 ... +752 °F) • Pt100 expanded measuring range: -196 ... +600 °C (-321 ... +1112 °F) • Thermocouple: -40 ... +1 100 °C (-40 ... +2012 °F) (type dependent)	• Pt100 basic: -50 ... +400 °C (-58 ... +752 °F) • Pt100 expanded measuring range: -196 ... +600 °C (-321 ... +1112 °F) • Thermocouple: -40 ... +1 100 °C (-40 ... +2 012 °F) (type dependent)
Max. nominal pressure[1] (static pressure at 20 °C) Dimensions in mm (inch)	Pipe diameter 9 (0.35): • 0 ... 150 (0 ... 5.91), at 50 bar • 150 ... 300 (5.91 ... 11.81), at 40 bar • Compression fitting, at 5 bar Pipe diameter 12 (0.47): • 0 ... 150 (0 ... 5.9), at 75 bar • 150 ... 300 (5.91 ... 11.81), at 60 bar	Pipe diameter 9 (0.35): • 0 ... 150 (0 ... 5.91), at 50 bar • 150 ... 300 (5.91 ... 11.81), at 40 bar Pipe diameter 12 (0.47): • 0 ... 150 (0 ... 5.91), at 75 bar • 150 ... 300 (5.91 ... 11.81), at 60 bar Note restriction imposed by PN of the flange	Pipe diameter 12 (0.47): • 0 ... 200 (0 ... 7.87), at 75 bar • 200 ... 300 (7.87 ... 11.81), at 60 bar • Compression fitting, at 5 bar: PTFE gasket, temperature min./max. -20 ... +150 °C (-4 ... +302 °F)
Min. response time $t_{0.5}$	20 ... 34 s	20 ... 34 s	7 ... 15 s
Degree of protection	IP54 ... IP68 depending on connection head	IP54 ... IP68 depending on connection head	IP54 ... IP68 depending on connection head

[1] Load combinations (temperature, flow, vibration, pressure) can at times significantly restrict these values. Additional temperature limits result, for example, from thermowell materials with lower limits (e.g. 1.4571 pressure resilient, 450 .... 550 °C (842 ... 1022 °F), limit temperature 800 °C (1472 °F)).

Type	TS500 Type 3G	TS500 Type 3F	TS500 Type 4/4F
Description	Temperature sensors for the process industry (pipes and vessels) Faster response than Form 2	Temperature sensors for the process industry (pipes and vessels) Faster response than Form 2	Temperature sensors for the process industry (pipes and vessels) Fast response version available
Application	Tubular thermowell for low to medium stress	Tubular thermowell for low to medium stress	Barstock thermowell for medium to extreme stress
Version	Thermowell according to DIN 43772, type 3G, screwed design	Thermowell according to DIN 43772, type 3F with flange	Thermowell according to DIN 43772: • Type 4 for welding • Type 4F with flange
Type	With extension	With extension	With extension
Figure			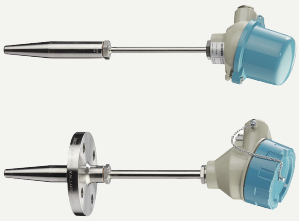
Article No.	7MC751*-1*K**-1***	7MC751*-2*K**-1***	7MC752*
Wetted material	1.4404 or 1.4435 (316L)	1.4404 or 1.4435 (316L)	Form 4F: 1.4404 or 1.4435; 1.4571 (316L; 316TI) Form 4 additionally: 1.7335; 1.5415 (A 182 F11; A 204 Size A)

© Siemens AG 2025

Overview (continued)

Type	TS500 Type 3G	TS500 Type 3F	TS500 Type 4/4F
Thermowell forms	Form 3G	Form 3F	• Form 4 • Form 4F
Process connections	Screw-in thread welded on: • G 1 • G ½ • ½ NPT	Welded flange • DN 25, PN10 ... 40 • 1RF150 • 1.5RF150 • 1.5RF300	Form 4 for welding, Form 4F with flange: • DN 25, PN10 ... 40 • 1RF150 • 1RF300 • 1.5RF150 • 1.5RF300
Installation length	• 160 mm (6.30 inches) • 220 mm (8.66 inches) • 280 mm (11.02 inches)	• 225 mm (8.86 inches) • 285 mm (11.22 inches) • 345 mm (13.58 inches)	Form 4F: as per customer specification Form 4: • 110 mm (4.33 inches) fast • 140 mm (5.51 inches) fast/normal • 200 mm (7.87 inches) fast/normal • 260 mm (10.23 inches) normal
Neck pipe length	According to DIN 43772	According to DIN 43772	According to DIN 43772
Sensor elements	Pt100 + thermocouples	Pt100 + thermocouples	Pt100 + thermocouples
Sensor connection	• 1 × 4-wire • 2 × 3-wire • 2 × 4-wire	• 1 × 4-wire • 2 × 3-wire • 2 × 4-wire	• 1 × 4-wire • 2 × 3-wire • 2 × 4-wire
Sensor accuracy	• Class AA • Class A • Class B • Class 1 • Class 2	• Class AA • Class A • Class B • Class 1 • Class 2	• Class AA • Class A • Class B • Class 1 • Class 2
Connection heads	Type B (Type A flameproof)	Type B (Type A flameproof)	Type B (Type A flameproof)
Explosion protection (EU, CN, EAC, AU, NZ, US, CA)	• Intrinsic safety "i"/"IS" • Flameproof enclosure "d"/"XP" • Dust protection by enclosure "t"/"DIP" • Non-sparking "ec"/"nA"/"NI"	• Intrinsic safety "i"/"IS" • Flameproof enclosure "d"/"XP" • Non-sparking "ec"/"nA"/"NI"	• Intrinsic safety "i"/"IS" • Flameproof enclosure "d"/"XP" • Non-sparking "ec"/"nA"/"NI"
Output signal	Sensor signal: • 4 ... 20 mA • HART standard • HART hot backup • PROFIBUS PA hot backup	Sensor signal: • 4 ... 20 mA • HART standard • HART hot backup • PROFIBUS PA hot backup	Sensor signal: • 4 ... 20 mA • HART standard • HART hot backup • PROFIBUS PA hot backup
Application	Pipes and vessels	Pipes and vessels	Pipes and vessels
Limit temperatures[1] [°C (°F)]	• Pt100 basic: -50 ... +400 °C (-58 ... +752 °F) • Pt100 expanded measuring range: -196 ... +600 °C (-321 ... +1112 °F) • Thermocouple: -40 ... +1 100 °C (-40 ... +2012 °F) (type dependent)	• Pt100 basic: -50 ... +400 °C (-58 ... +752 °F) • Pt100 expanded measuring range: -196 ... +600 °C (-321 ... +1112 °F) • Thermocouple: -40 ... +1 100 °C (-40 ... +2012 °F) (type dependent)	• Pt100 basic: -50 ... +400 °C (-58 ... +752 °F) • Pt100 expanded measuring range: -196 ... +600 °C (-321 ... +1112 °F) • Thermocouple: -40 ... +1 100 °C (-40 ... +2012 °F) (type dependent)
Max. nominal pressure[1] (static pressure at 20 °C) Dimensions in mm (inch)	Pipe diameter 12 (0.47): • 0 ... 200 (0 ... 7.87), at 75 bar • 200 ... 300 (7.87 ... 11.81), at 60 bar	Pipe diameter 12 (0.47): • 0 ... 200 (0 ... 7.87), at 75 bar • 200 ... 300 (7.87 ... 11.81), at 60 bar Note restriction imposed by PN of the flange	Mat. (1.4404; 1.4571): • 65 (2.56), at 450 bar • 125 (4.92), at 350 bar Mat. (1.7335; 1.5415): • 65 (2.56), at 500 bar • 125 (4.92), at 400 bar form 4F: Note restriction imposed by PN of the flange
Min. response time $t_{0.5}$	7 ... 15 s	7 ... 15 s	Diameter 24 mm (0.95 inches): 20 ... 45 s
Degree of protection	IP54 ... IP68 depending on connection head	IP54 ... IP68 depending on connection head	IP54 ... IP68 depending on connection head

© Siemens AG 2025

Overview (continued)

1) Load combinations (temperature, flow, vibration, pressure) can at times significantly restrict these values. Additional temperature limits result, for example, from thermowell materials with lower limits (e.g. 1.4571 pressure resilient, 450 .... 550 °C (842 ... 1022 °F), limit temperature 800 °C (1472 °F)).

Type	SITRANS TSthermowell 7MT14..	SITRANS TSthermowell 7MT2..	SITRANS TSthermowell 7MT3..
Description	Thermowells for the process industry	Thermowells for the process industry	Thermowells for the process industry
Application	Barstock thermowell for medium to extreme stress	Barstock thermowell for medium to extreme stress	Barstock thermowell for medium to extreme stress
Version	Thermowell according to DIN 43772	Thermowell according to ASME B40.9	Thermowell according to ASME B40.9
Type	With flange connection or for welding in	Screwed design	For welding
Figure			
Article No.	7MT14..	7MT21.. (straight) 7MT22.. (reduced) 7MT23.. (tapered)	7MT31.. (straight) 7MT32.. (reduced) 7MT33.. (tapered)
Wetted material	• 316Ti/1.4571 • 316L/1.4404 • Hastelloy C276/2.4819 • 1.5415 Heat-resistant • 1.7335 Heat-resistant • PFA coating (thermowell made of 316/TI/L) • ECTFE (HALAR) (thermowell made of 316/TI/L) • Stellite coating (thermowell made of 316/TI/L)	• 316L/1.4404 • Carbon steel • 304L/1.4306 • 321/1.4541	• 316L/1.4404 • Carbon steel • 304L/1.4306 • 321/1.4541
Thermowell forms	• Straight/tapered	• Straight • Reduced (staggered) • Tapered	• Straight • Reduced (staggered) • Tapered
Process connections	• Without (for direct welding) • Flange connection • EN 1092-1: DN 40, 50/PN 10-16, 25-40 • ASME B16.5: 1.5" 2"/Class 150, 300, 600	• M20 × 1.5 • M27 × 2.0 • M33 × 2.0 • ½-14 NPT • ¾ NPT • 1 NPT • G½ • G¾ • G1 • R½ • R¾ • R1	• 26.7 mm • 33.4 mm • 48.3 mm
Installation length	Standard lengths and free configuration		
Extension length	Standard lengths and free configuration		
Explosion protection	Not Ex-relevant, but offers zone separation when wall thickness of 1 mm for anti-corrosive materials, or otherwise 3 mm, is observed. Not for coated versions.		
Application	Pipes and vessels		
Limit temperatures	Material-dependent		
Max. static pressure	Material-dependent		
Min. response time	20 s ... several minutes		
Degree of protection	When installed correctly, IP68 is achieved between extension and thermowell		

© Siemens AG 2025

Overview (continued)

Type	SITRANS TSthermowell 7MT4..	SITRANS TSthermowell 7MT5..
Description	Thermowells for the process industry	Thermowells for the process industry
Application	Barstock thermowell for medium to extreme stress	Barstock thermowell for medium to extreme stress
Version	Thermowell according to ASME B40.9	Thermowell according to ASME B40.9
Type	With flange connection	Van Stone version
Figure	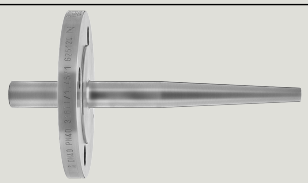	
Article No.	7MT41.. (straight) 7MT42.. (reduced) 7MT43.. (tapered)	7MT51.. (straight) 7MT52.. (reduced) 7MT53.. (tapered)
Wetted material	• 316L/1.4404 • Carbon steel • Hastelloy C276/2.4819 • Hastelloy C22/2.4602 • 304L/1.4306 • 321/1.4541 • Monel alloy 400/2.4360 • Tantalum (barrel, thermowell made of 316/TI/L) • Duplex/1.4462 • Super duplex • PFA coating (thermowell made of 316/TI/L) • ECTFE (HALAR) (thermowell made of 316/TI/L) • Stellite coating (thermowell made of 316/TI/L)	• 316L/1.4404 • Hastelloy C276/2.4819 • Hastelloy C22/2.4602 • 304L/1.4306 • 321/1.4541 • Monel alloy 400/2.4360 • Duplex/1.4462 • Super duplex • Tantalum coating on 316 • PFA coating (thermowell made of 316/TI/L) • ECTFE (HALAR) (thermowell made of 316/TI/L) • Stellite coating (thermowell made of 316/TI/L)
Thermowell forms	• Straight • Reduced (staggered) • Tapered	• Straight • Reduced (staggered) • Tapered
Process connections	• EN 1092-1: nom. diam. 25, 40, 50/ PN 10-16, 25-40 • ASME B16.5: 1", 1.5", 2", 3", 4"/ Class 150, 300, 600	• 33.4 mm/51 mm • 48.3 mm/73 mm • 60.3 mm/92 mm + collar flanges ASME B16.5: 1", 1.5, "2"/ Class 150, 300, 600
Installation length	Standard lengths and free configuration	
Extension length	Standard lengths and free configuration	
Explosion protection	Not Ex-relevant, but offers zone separation when wall thickness of 1 mm for anti-corrosive materials, or otherwise 3 mm, is observed. Not for coated versions.	
Application	Pipes and vessels	
Limit temperatures	Material-dependent	
Max. static pressure	Material-dependent	
Min. response time	20 s ... several minutes	
Degree of protection	When installed correctly, IP68 is achieved between extension and thermowell	

© Siemens AG 2025

Overview (continued)

SITRANS TS200 compression fittings

Type	SITRANS TS200 compression fittings 7MC7905-0A*03-0AA0	SITRANS TS200 compression fittings 7MC7905-0A*06-0AA0
Description	Compression fittings unsprung with VA-ring for sensor diameter Ø 3 mm	Compression fittings unsprung with VA-ring for sensor diameter Ø 6 mm
Application	Specially developed for direct immersion of the whole range of temperature sensors with mineral insulation	Specially developed for direct immersion of the whole range of temperature sensors with mineral insulation
Figure	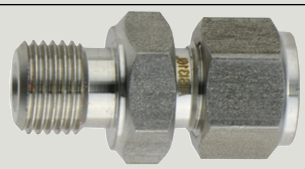	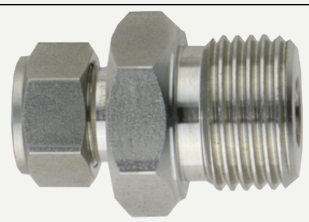
Barrel	VA-ring	VA-ring
Sheath diameter	Ø 3 mm	Ø 6 mm
For sensor diameter	Ø 3 mm	Ø 6 mm
Process connection	• with thread 1/8" G • with thread 1/8" NPT • with thread 1/4" G • with thread 1/4" NPT • with thread 3/8" G • with thread 3/8" NPT • with thread 1/2" G • with thread 1/2" NPT	• with thread 1/4" G • with thread 1/4" NPT • with thread 3/8" G • with thread 3/8" NPT • with thread 1/2" G • with thread 1/2" NPT • with thread 3/4" G • with thread 3/4" NPT
Material of the part in contact with the measured part	AISI 316L	AISI 316L
Type of leak tightness	Barrel made of stainless steel PN max. 100 bar; tighten 3/4 turn	Barrel made of stainless steel PN max. 100 bar; tighten 3/4 turn

Type	SITRANS TS200 compression fittings 7MC7905-0B*03-0AA0	SITRANS TS200 compression fittings 7MC7905-0B*06-0AA0
Description	Compression fittings unsprung with PTFE-ring + stainless steel pressing bush for sensor diameter Ø 3 mm	Compression fittings unsprung with PTFE-ring + stainless steel pressing bush for sensor diameter Ø 6 mm
Application	Specially developed for direct immersion of the whole range of temperature sensors with mineral insulation	Specially developed for direct immersion of the whole range of temperature sensors with mineral insulation
Figure	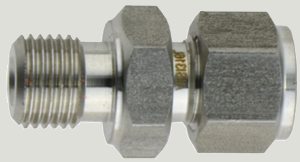	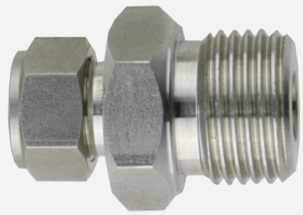
Barrel	PTFE-ring + stainless steel packing	PTFE-ring + stainless steel packing
Sheath diameter	Ø 3 mm	Ø 6 mm
For sensor diameter	Ø 3 mm	Ø 6 mm
Process connection	• with thread 1/8" G • with thread 1/8" NPT • with thread 1/4" G • with thread 1/4" NPT • with thread 3/8" G • with thread 3/8" NPT • with thread 1/2" G • with thread 1/2" NPT	• with thread 1/4" G • with thread 1/4" NPT • with thread 3/8" G • with thread 3/8" NPT • with thread 1/2" G • with thread 1/2" NPT

© Siemens AG 2025

Overview (continued)

Type	SITRANS TS200 compression fittings 7MC7905-0B*03-0AA0	SITRANS TS200 compression fittings 7MC7905-0B*06-0AA0
Material of the part in contact with the measured part	AISI 316	AISI 316
Type of leak tightness	Ring PTFE PN max. 20 bar (T max. 100 °C (212 °F))	Ring PTFE PN max. 20 bar (T max. 100 °C (212 °F))

SITRANS TS200 thermowell

Type	SITRANS TS200 thermowell 7MC7908-1A*1*-0AA0	SITRANS TS200 thermowell 7MC7908-1A*1*-0AA0
Description	SITRANS TS200 thermowell; material 1.4404 AISI 316L incl. compression fitting unsprung with VA-ring for sensor diameter Ø 3 mm	SITRANS TS200 thermowell; material 1.4404 AISI 316L incl. compression fitting unsprung with VA-ring for sensor diameter Ø 6 mm
Application	Enables fast replacement of the sensor without draining the process • Suitable for insertion of temperature sensors with a diameter of 3 mm • Large selection of process connections • Sealing system with compression fitting which enables repeated tightening without damaging the temperature sensor	Enables fast replacement of the sensor without draining the process • Suitable for insertion of temperature sensors with a diameter of 6 mm • Large selection of process connections • Sealing system with compression fitting which enables repeated tightening without damaging the temperature sensor
Figure		
Material, diameter of protective tube	(AD / ID) 5 / 3.5 mm AISI 316L	(AD / ID) 9 / 7 mm AISI 316L
Sensor mounting mechanism	Compression fitting unsprung with VA-ring	Compression fitting unsprung with VA-ring
For sensor diameter	Ø 3 mm	Ø 6 mm
Process connection	• with thread 1/8" G (K = 10 mm) • with thread 1/8" NPT (K = min. 4.0; max. 6.5 mm) • with thread 1/4" G (K = 10 mm) • with thread 1/4" NPT (K = min. 5.5; max. 10 mm) • with thread 3/8" G (K = 15 mm) • with thread 3/8" NPT (K = min. 6; max. 10 mm) • with thread 1/2" G (K = 15 mm) • with thread 1/2" NPT (K = min. 8; max. 13.5 mm)	• with thread 3/8" G (K = 15 mm) • with thread 3/8" NPT (K = min. 6; max. 10 mm) • with thread 1/2" G (K = 15 mm) • with thread 1/2" NPT (K = min. 8; max. 13.5 mm) • with thread 1/4" G (K = 10 mm) • with thread 1/4" NPT (K = min. 5.5; max. 10 mm)
Material of the part in contact with the measured part	AISI 316L	AISI 316L
Length of the spindle U = U2+K; U2 = "K" see section "Process connection"	• 50 mm • 100 mm • 150 mm • 200 mm • 300 mm • 400 mm	• 50 mm • 100 mm • 150 mm • 200 mm • 300 mm • 400 mm
Notes on the dimensions	Lengths other than those listed can be manufactured for minimum quantities to be agreed upon (according to our feasibility study)	Lengths other than those listed can be manufactured for minimum quantities to be agreed upon (according to our feasibility study)
Maximum operating pressure	PN 100 bar (350 °C (662 °F))	PN 100 bar (350 °C (662 °F))

© Siemens AG 2025

Dimensional drawings

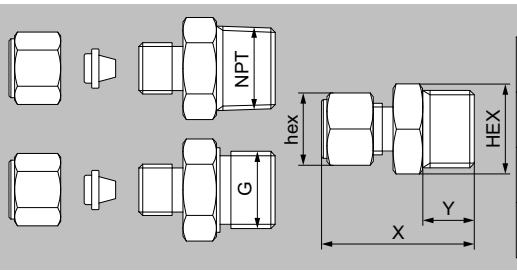

		Y mm	X mm	HEX mm	hex mm
1/8	NPT	10	~35	12	13
	G	10	~35	14	
1/4	NPT	15	~45	17	
	G	10	~40	17	
3/8	NPT	15	~45	17	
	G	15	~45	22	
1/2	NPT	20	~50	22	
	G	15	~45	24	

SITRANS TS200 IO-Link compression fittings unsprung with VA-ring for sensor diameter Ø 3 mm

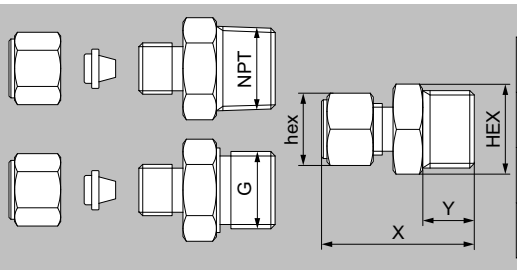

		Y mm	X mm	HEX mm	hex mm
1/8	NPT	15	~45	17	17
	G	10	~40	17	
1/4	NPT	15	~45	17	
	G	15	~45	22	
3/8	NPT	20	~50	22	
	G	15	~45	24	
1/2	NPT	20	~50	27	
	G	20	~50	32	

SITRANS TS200 IO-Link compression fittings unsprung with VA-ring for sensor diameter Ø 6 mm

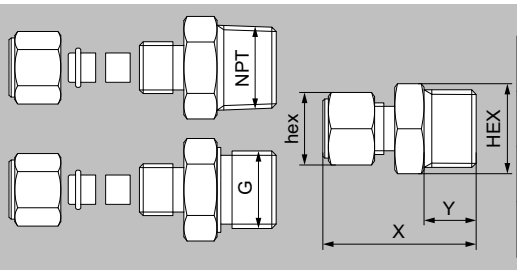

		Y mm	X mm	HEX mm	hex mm
1/8	NPT	10	~35	12	13
	G	10	~35	14	
1/4	NPT	15	~45	17	
	G	10	~40	17	
3/8	NPT	15	~45	17	
	G	15	~45	22	
1/2	NPT	20	~50	22	
	G	15	~45	24	

SITRANS TS200 IO-Link compression fittings unsprung with PTFE-ring + stainless steel pressing bush for sensor diameter Ø 3 mm

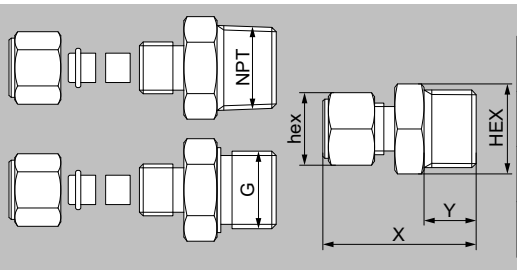

		Y mm	X mm	HEX mm	hex mm
1/8	NPT	15	~45	17	17
	G	10	~40	17	
1/4	NPT	15	~45	17	
	G	15	~45	22	
3/8	NPT	20	~50	22	
	G	15	~45	24	
1/2	NPT	20	~50	27	
	G	20	~50	32	

SITRANS TS200 IO-Link compression fittings unsprung with PTFE-ring + stainless steel pressing bush for sensor diameter Ø 6 mm

© Siemens AG 2025

Dimensional drawings (continued)

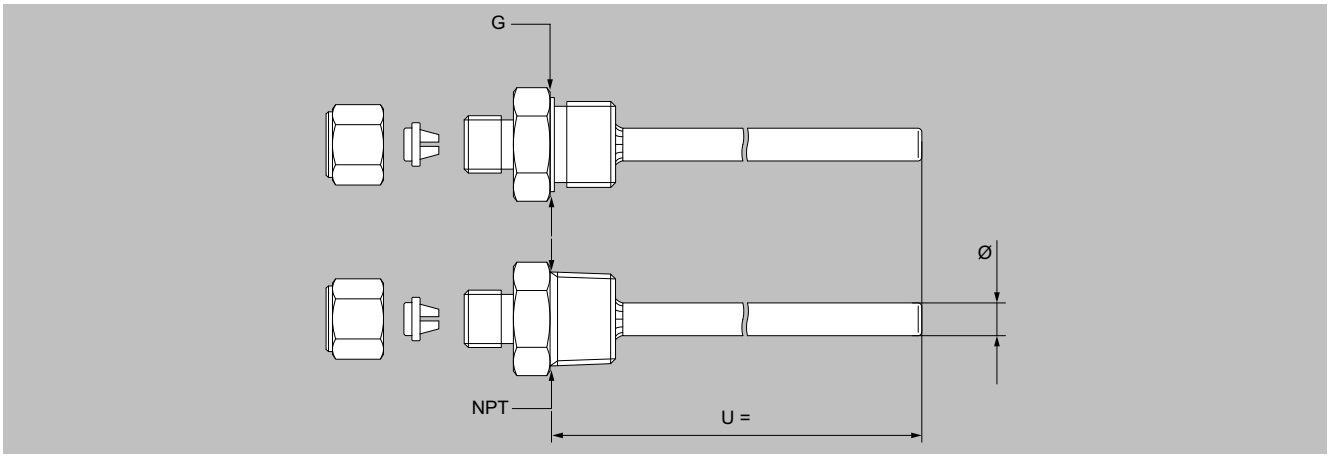

SITRANS TS200 thermowell; incl. compression fitting unsprung with VA-ring for sensor diameter Ø 3 mm

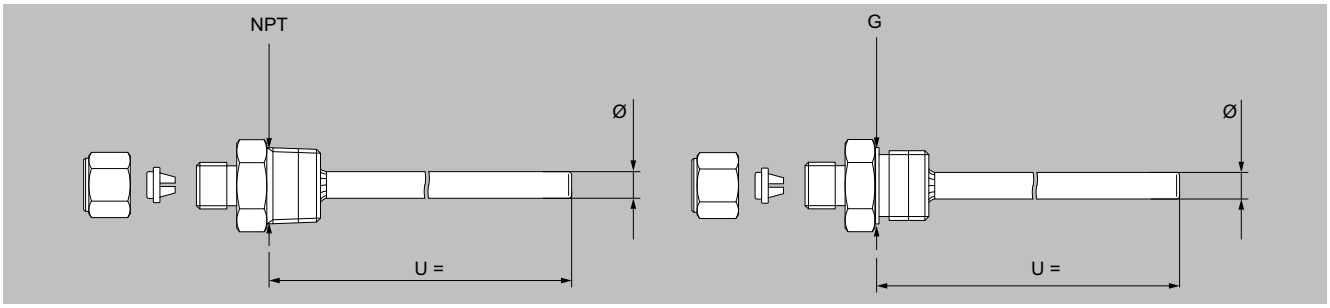

SITRANS TS200 thermowell; incl. compression fitting unsprung with VA-ring for sensor diameter Ø 6 mm

© Siemens AG 2025

Selection and ordering data

SITRANS TS200 Compact Temperature sensors in compact version, for universal use, mineral-insulated version, for unfavorable space conditions	Article No. 7MC7212-	●	●	●	●	●
Click the article number for online configuration in the PIA Life Cycle Portal.						
Sensor diameter						
6 mm (0.24 inches)		6				
Length of the basic sensor B Effective length U = B-10, see "Dimensional drawings"						
200 mm (7.87 inches)			C			
500 mm (19.68 inches)			D			
750 mm (29.53 inches)			E			
Customer-specific length of the basic sensor B Effective length U = B-10, see "Dimensional drawings" Specify customer-specific length with Y44, see order codes						
85 ... 100 mm (2.76 ... 3.94 inches) Initial: 100 mm (3.94 inches)			B			
101 ... 250 mm (3.98 ... 9.84 inches) Initial: 200 mm (7.87 inches)			C			
251 ... 500 mm (9.88 ... 19.68 inches) Initial: 500 mm (19.68 inches)			D			
501 ... 750 mm (19.72 ... 29.53 inches) Initial: 750 mm (29.53 inches)			E			
751 ... 1 000 mm (19.72 ... 39.37 inches) Initial: 1 000 mm (39.37 inches)			F			
1 001 ... 1 500 mm (39.4 ... 59.00 inches) Initial: 1 500 mm (59.00 inches)			G			
Special length: < 70 mm (2.76 inches) or >1 500 mm (59.00 inches)			X			
Sensor[1] Note: The accuracy class range can be lower than the measuring range. For more detailed information, see "Configuration"/"Measuring technology: Measuring accuracy"						
Pt100, Basic, -50 ... +400 °C (-58 ... +752 °F)				A		
Pt100, vibration-resistant, -50 ... +400 °C (-58 ... +752 °F)				B		
Pt100, extended range, -196 ... +600 °C (-320.8 ... +1 112 °F)				C		
Type K thermocouple, -270 ... +1 100 °C (-167 ... +2 012 °F)				K		
Type J thermocouple, -40 ... +750 °C -0 ... +750 °C (-18 ... +1 382 °F)				J		
Number/precision of sensors Pt100 connection: 1 × 4-wire connection or 2 × 3-wire connection, see "Configuration"/"Measuring technology: Connection types"						
Single, basic accuracy (Class 2/Class B)					1	
Single, increased accuracy (Class 1/Class A)					2	
Single, maximum accuracy (Class AA)					3	
Double, basic accuracy (Class 2/Class B)					4	
Double, increased accuracy (Class 1/Class A)					5	
Double, maximum accuracy (Class AA)					6	
Type of connection side						
Solid wire ends (basic sensor)						0
Flying leads						1
Coupling LEMO 1S						2
M12 device plug, not for double Pt100						3
Thermocouple coupling, made of thermal material (2 × TC on request)						4
Mini connection head aluminum, not for double Pt100						5

[1] Pt1000 versions are also available.
To find these, switch to Online Configuration in the PIA Life Cycle Portal: www.siemens.com/pia-portal

Options	Order code
Add **"-Z"** to article number and specify options; separate multiple expansions with "+"	
Process connection	
Soldering nipple enclosed	
• G¼"	**A20**

Options	Order code
• G½"	**A21**
• NPT½"	**A22**
• M18x1.5	**A23**

© Siemens AG 2025

Selection and ordering data (continued)

Options	Order code
Compression fitting enclosed	
• G¼"	**A30**
• G½"	**A31**
• NPT½"	**A32**
Surface connection piece	
• Aluminum, enclosed (non-Ex)	**A50**
Certificates and approvals	
Inspection certificate EN 10204-3.1: Wetted material	**C12**
Inspection certificate EN 10204-3.1: Visual, dimensional and function check	**C34**
Inspection certificate EN 10204-2.1: Declaration of compliance with the order	**C35**
ISO 9001 grease-free (cleaned for oxygen applications, for example)	**C51**
Marine approvals	
Det Norske Veritas Germanischer Lloyd (DNV GL)	**D01**
Type of protection (Ex)	
Without explosion protection requirements (Europe, Australia, New Zealand)	**E00**
Intrinsic safety "i"/"IS"[1] according to ATEX and IECEx (Europe, Australia, New Zealand)	**E01**
Without explosion protection requirements (USA, Canada), Basis CSA	**E17**
Intrinsic safety "i"/"IS"[1] according to cCSAus (USA, Canada)	**E18**
Without explosion protection requirements (China)	**E54**

Options	Order code
Intrinsic safety "i"/"IS"[1] according to NEPSI (China)	**E55**
Intrinsic safety ia,"ic" according to KCC/KCS (Korea)	**E70**
Without explosion protection requirements (EAC)	**E80**
Intrinsic safety "i"/"IS"[1] according to EACEx (EAC)	**E81**
Device settings	
Tag plate made of stainless steel, specify label in plain text	**Y15**
Perform factory calibration at one point, specify desired temperature in plain text. Notice: For devices with built-in head-mounted transmitter, select test points within the set measuring range.	**Y33**
Special length of the basic sensor B Effective length U = B-10, see "Dimensional drawings" Select range, plain text specification of desired length (no specification = standard length)	**Y44**
Customer-specific plain text	
Handling number of the special design	**Y99**

[1] Please select Ex i version of the optional transmitter.

For ordering examples, see "Temperature sensors"/"Ordering examples".

For accessories, see "Accessories"/"Additional accessories for assembly, connection and transmitter configuration".

© Siemens AG 2025

Dimensional drawings

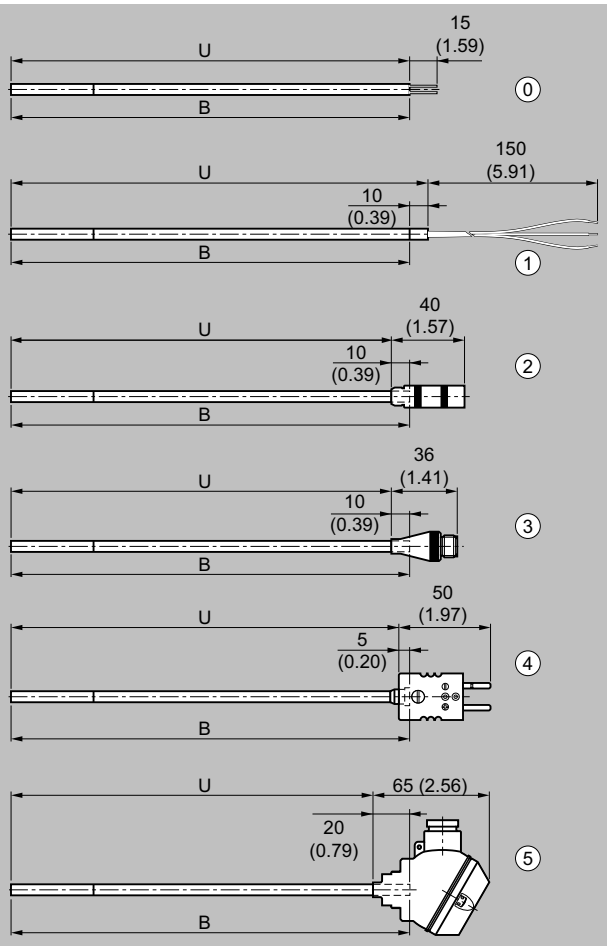

B Measuring insert length
H Head height
U Insertion length

			IP level sensor	IP level terminals
0	Basic sensor	U = B	IP65	IP00
1	Flying leads	U = B + 10 (0.39)	IP65	IP00
2	LEMO coupling 1S	U = B - 10 (0.39)	IP65	IP50
3	M12 device plugs	U = B - 10 (0.39)	IP65	IP54
4	Thermocouple coupling	U = B - 5 (0.20)	IP65	IP20
5	Mini connection head	U = B - 20 (0.79)	IP65	IP65

SITRANS TS200 Compact, temperature sensors in cable version, for universal use, mineral-insulated version, for unfavorable space conditions, dimensions in mm (inch)

Dimensional drawings (continued)

Process connection

Size	Code	Height
G1/4"	A30	37 (1.46)
G1/2"	A31	45 (1.77)
G1/2"	A41	53 ... 63 (2.09 ... 2.48)

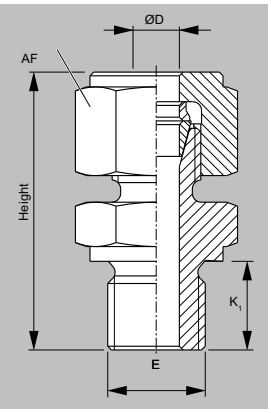

Cylindrical compression fitting (A30, A31, A41), dimensions in mm (inch)

Size	Code	Height
NPT 1/2"	A32	43 (1.69)

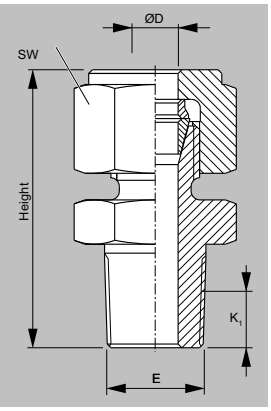

Compression fitting NPT (A32), dimensions in mm (inch)

Size	Code	Height
G1/4"	A20	20 (0.79)
G1/2"	A21	27 (1.06)
M18x1.5	A23	24.5 (0.96)

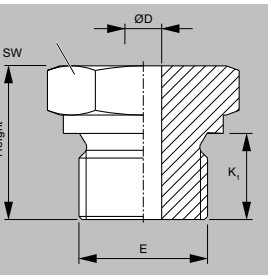

Cylindrical soldering nipple (A20, A21, A23), dimensions in mm (inch)

© Siemens AG 2025

Dimensional drawings (continued)

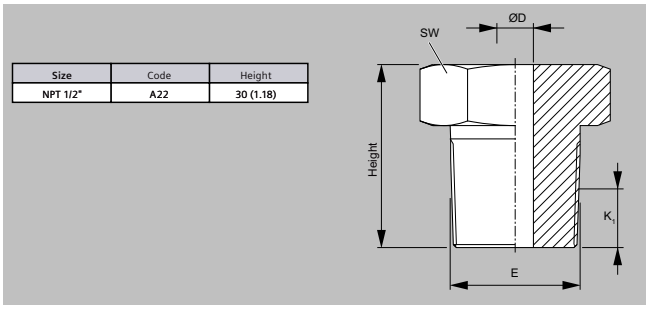

Size	Code	Height
NPT 1/2"	A22	30 (1.18)

Soldering nipple NPT (A22), dimensions in mm (inch)

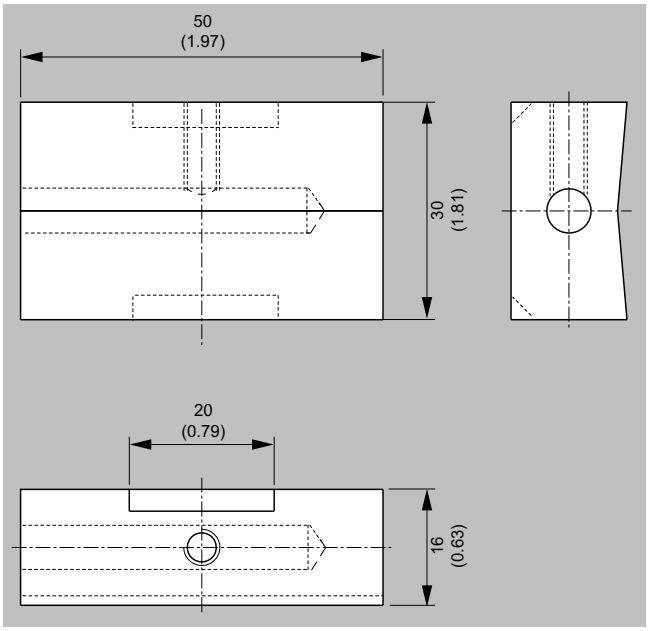

Surface connection piece (A50), dimensions in mm (inch)

© Siemens AG 2025

Selection and ordering data

	Article No.	
Transmitter for external sensors		
SITRANS TS200 temperature transmitter for external Pt100 and Pt1000 temperature sensors with IO-Link/output 4 ... 20 mA, PA6 plastic enclosure	**7MC7216-0AC00-0AA0**	
SITRANS TS200 temperature transmitter for external Pt100 and Pt1000 temperature sensors with IO-Link/output 4 ... 20 mA, 316L stainless steel enclosure	**7MC7216-0AD00-0AA0**	
Fast response time and thermowell connection		
SITRANS TS200 temperature sensor (Ø 3 mm) Pt100 class A with fast response time, sensor length 115 mm and integrated M10 thermowell connection. Including IO-Link/output 4 ... 20 mA, 316L stainless steel enclosure	**7MC7216-3GB20-0AA0**	
Optimized response time		
SITRANS TS200 temperature sensor (Ø 6/4.4 mm) Pt100 class A with optimized response time, sensor length 100 mm. Including IO-Link/output 4 ... 20 mA, 316L stainless steel enclosure	**7MC7216-4FB00-0AA0**	
SITRANS TS200 temperature sensor (Ø 6/4.4 mm) Pt100 class A with optimized response time, sensor length 150 mm. Including IO-Link/output 4 ... 20 mA, 316L stainless steel enclosure	**7MC7216-4HB00-0AA0**	
SITRANS TS200 temperature sensor (Ø 6/4.4 mm) Pt100 class A with optimized response time, sensor length 250 mm. Including IO-Link/output 4 ... 20 mA, 316L stainless steel enclosure	**7MC7216-4MB00-0AA0**	
SITRANS TS200 temperature sensor (Ø 6/4.4 mm) Pt100 class A with optimized response time, sensor length 350 mm. Including IO-Link/output 4 ... 20 mA, 316L stainless steel enclosure	**7MC7216-4PB00-0AA0**	
SITRANS TS200 temperature sensor (Ø 6/4.4 mm) Pt100 class A with optimized response time, sensor length 500 mm. Including IO-Link/output 4 ... 20 mA, 316L stainless steel enclosure	**7MC7216-4SB00-0AA0**	
SITRANS TS200 temperature sensor (Ø 6/4.4 mm) Pt100 class A with optimized response time, sensor length 750 mm. Including IO-Link/output 4 ... 20 mA, 316L stainless steel enclosure	**7MC7216-4XB00-0AA0**	

© Siemens AG 2025

Selection and ordering data (continued)

	Article No.	
SITRANS TS200 temperature sensor (Ø 6 mm) Pt100 class A with optimized response time, sensor length 100 mm. Including IO-Link/output 4 ... 20 mA, 316L stainless steel enclosure	7MC7216-6FB00-0AA0	
SITRANS TS200 temperature sensor (Ø 6 mm) Pt100 class A with optimized response time, sensor length 150 mm. Including IO-Link/output 4 ... 20 mA, 316L stainless steel enclosure	7MC7216-6HB00-0AA0	
SITRANS TS200 temperature sensor (Ø 6 mm) Pt100 class A with optimized response time, sensor length 250 mm. Including IO-Link/output 4 ... 20 mA, 316L stainless steel enclosure	7MC7216-6MB00-0AA0	
SITRANS TS200 temperature sensor (Ø 6 mm) Pt100 class A with optimized response time, sensor length 350 mm. Including IO-Link/output 4 ... 20 mA, 316L stainless steel enclosure	7MC7216-6PB00-0AA0	
SITRANS TS200 temperature sensor (Ø 6 mm) Pt100 class A with optimized response time, sensor length 500 mm. Including IO-Link/output 4 ... 20 mA, 316L stainless steel enclosure	7MC7216-6SB00-0AA0	
SITRANS TS200 temperature sensor (Ø 6 mm) Pt100 class A with optimized response time, sensor length 750 mm. Including IO-Link/output 4 ... 20 mA, 316L stainless steel enclosure	7MC7216-6XB00-0AA0	
SITRANS TS200 temperature sensor (Ø 3 mm) Pt100 class A with sensor length 100 mm. Including IO-Link/output 4 ... 20 mA, PA6 plastic enclosure	7MC7216-3FA00-0AA0	
SITRANS TS200 temperature sensor (Ø 3 mm) Pt100 class A with sensor length 150 mm. Including IO-Link/output 4 ... 20 mA, PA6 plastic enclosure	7MC7216-3HA00-0AA0	
SITRANS TS200 temperature sensor (Ø 3 mm) Pt100 class A with sensor length 250 mm. Including IO-Link/output 4 ... 20 mA, PA6 plastic enclosure	7MC7216-3MA00-0AA0	
SITRANS TS200 temperature sensor (Ø 3 mm) Pt100 class A with sensor length 350 mm. Including IO-Link/output 4 ... 20 mA, PA6 plastic enclosure	7MC7216-3PA00-0AA0	
SITRANS TS200 temperature sensor (Ø 3 mm) Pt100 class A with sensor length 500 mm. Including IO-Link/output 4 ... 20 mA, PA6 plastic enclosure	7MC7216-3SA00-0AA0	
SITRANS TS200 temperature sensor (Ø 3 mm) Pt100 class A with sensor length 750 mm. Including IO-Link/output 4 ... 20 mA, PA6 plastic enclosure	7MC7216-3XA00-0AA0	
Optimized response time		
SITRANS TS200 temperature sensor (Ø 6 mm) Pt100 class A with sensor length 100 mm. Including IO-Link/output 4 ... 20 mA, PA6 plastic enclosure	7MC7216-6FA00-0AA0	
SITRANS TS200 temperature sensor (Ø 6 mm) Pt100 class A with sensor length 150 mm. Including IO-Link/output 4 ... 20 mA, PA6 plastic enclosure	7MC7216-6HA00-0AA0	
SITRANS TS200 temperature sensor (Ø 6 mm) Pt100 class A with sensor length 250 mm. Including IO-Link/output 4 ... 20 mA, PA6 plastic enclosure	7MC7216-6MA00-0AA0	
SITRANS TS200 temperature sensor (Ø 6 mm) Pt100 class A with sensor length 350 mm. Including IO-Link/output 4 ... 20 mA, PA6 plastic enclosure	7MC7216-6PA00-0AA0	
SITRANS TS200 temperature sensor (Ø 6 mm) Pt100 class A with sensor length 500 mm. Including IO-Link/output 4 ... 20 mA, PA6 plastic enclosure	7MC7216-6SA00-0AA0	
SITRANS TS200 temperature sensor (Ø 6 mm) Pt100 class A with sensor length 750 mm. Including IO-Link/output 4 ... 20 mA, PA6 plastic enclosure	7MC7216-6XA00-0AA0	

© Siemens AG 2025

Selection and ordering data (continued)

	Article No.	
Fast response time and process connection		
SITRANS TS200 temperature sensor (Ø 3.5/3 mm) Pt100 class A with fast response time, sensor length 13 mm and integrated G 1/8" process connection. Including IO-Link/output 4 ... 20 mA, 316L stainless steel enclosure	**7MC7216-5BB10-0AA0**	
SITRANS TS200 temperature sensor (Ø 3.5/3 mm) Pt100 class A with fast response time, sensor length 24 mm and integrated G 1/8" process connection. Including IO-Link/output 4 ... 20 mA, 316L stainless steel enclosure	**7MC7216-5CB10-0AA0**	
SITRANS TS200 temperature sensor (Ø 3.5/3 mm) Pt100 class A with fast response time, sensor length 13 mm and integrated NPT 1/8" process connection. Including IO-Link/output 4 ... 20 mA, 316L stainless steel enclosure	**7MC7216-5BB13-0AA0**	

© Siemens AG 2025

Selection and ordering data (continued)

	Article No.	
SITRANS TS200 temperature sensor (Ø 3.5/3 mm) Pt100 class A with fast response time, sensor length 24 mm and integrated NPT 1/8" process connection. Including IO-Link/output 4 ... 20 mA, 316L stainless steel enclosure	**7MC7216-5CB13-0AA0**	
SITRANS TS200 temperature sensor (Ø 3.5/3 mm) Pt100 class A with fast response time, sensor length 13 mm and integrated G 1/4" process connection. Including IO-Link/output 4 ... 20 mA, 316L stainless steel enclosure	**7MC7216-5BB11-0AA0**	
SITRANS TS200 temperature sensor (Ø 3.5/3 mm) Pt100 class A with fast response time, sensor length 24 mm and integrated G 1/4" process connection. Including IO-Link/output 4 ... 20 mA, 316L stainless steel enclosure	**7MC7216-5CB11-0AA0**	

© Siemens AG 2025

Selection and ordering data (continued)

	Article No.	
SITRANS TS200 temperature sensor (Ø 3.5/3 mm) Pt100 class A with fast response time, sensor length 13 mm and integrated NPT 1/4" process connection. Including IO-Link/output 4 ... 20 mA, 316L stainless steel enclosure	**7MC7216-5BB14-0AA0**	
SITRANS TS200 temperature sensor (Ø 3.5/3 mm) Pt100 class A with fast response time, sensor length 24 mm and integrated NPT 1/4" process connection. Including IO-Link/output 4 ... 20 mA, 316L stainless steel enclosure	**7MC7216-5CB14-0AA0**	
SITRANS TS200 temperature sensor (Ø 3.5/3 mm) Pt100 class A with fast response time, sensor length 13 mm and integrated G 1/8" process connection. Including IO-Link/output 4 ... 20 mA, PA6 plastic enclosure	**7MC7216-5BA10-0AA0**	

© Siemens AG 2025

Selection and ordering data (continued)

	Article No.	
SITRANS TS200 temperature sensor (Ø 3.5/3 mm) Pt100 class A with fast response time, sensor length 24 mm and integrated G 1/8" process connection. Including IO-Link/output 4 ... 20 mA, PA6 plastic enclosure	**7MC7216-5CA10-0AA0**	
SITRANS TS200 temperature sensor (Ø 3.5/3 mm) Pt100 class A with fast response time, sensor length 13 mm and integrated NPT 1/8" process connection. Including IO-Link/output 4 ... 20 mA, PA6 plastic enclosure	**7MC7216-5BA13-0AA0**	
SITRANS TS200 temperature sensor (Ø 3.5/3 mm) Pt100 class A with fast response time, sensor length 24 mm and integrated NPT 1/8" process connection. Including IO-Link/output 4 ... 20 mA, PA6 plastic enclosure	**7MC7216-5CA13-0AA0**	

© Siemens AG 2025

Selection and ordering data (continued)

	Article No.	
SITRANS TS200 temperature sensor (Ø 3.5/3 mm) Pt100 class A with fast response time, sensor length 13 mm and integrated G 1/4" process connection. Including IO-Link/output 4 ... 20 mA, PA6 plastic enclosure	**7MC7216-5BA11-0AA0**	
SITRANS TS200 temperature sensor (Ø 3.5/3 mm) Pt100 class A with fast response time, sensor length 24 mm and integrated G 1/4" process connection. Including IO-Link/output 4 ... 20 mA, PA6 plastic enclosure	**7MC7216-5CA11-0AA0**	
SITRANS TS200 temperature sensor (Ø 3.5/3 mm) Pt100 class A with fast response time, sensor length 13 mm and integrated NPT 1/4" process connection. Including IO-Link/output 4 ... 20 mA, PA6 plastic enclosure	**7MC7216-5BA14-0AA0**	
SITRANS TS200 temperature sensor (Ø 3.5/3 mm) Pt100 class A with fast response time, sensor length 24 mm and integrated NPT 1/4" process connection. Including IO-Link/output 4 ... 20 mA, PA6 plastic enclosure	**7MC7216-5CA14-0AA0**	

Accessories

	Article No.
Clamping ring connection unsprung; VA-ring	
Clamping ring connection unsprung; VA-ring, process connection: G 1/8"; clamping diameter: d = 3 mm; AISI 316L	**7MC7905-0AB03-0AA0**
Clamping ring connection unsprung; VA-ring, process connection: NPT 1/8"; clamping diameter: d = 3 mm; AISI 316L	**7MC7905-0AJ03-0AA0**
Clamping ring connection unsprung; VA-ring, process connection: G 1/4"; clamping diameter: d = 3 mm; AISI 316L	**7MC7905-0AC03-0AA0**
Clamping ring connection unsprung; VA-ring, process connection: G 1/4"; clamping diameter: d = 6 mm; AISI 316L	**7MC7905-0AC06-0AA0**
Clamping ring connection unsprung; VA-ring, process connection: NPT 1/4"; clamping diameter: d = 3 mm; AISI 316L	**7MC7905-0AK03-0AA0**

© Siemens AG 2025

Selection and ordering data (continued)

	Article No.
Clamping ring connection unsprung; VA-ring, process connection: NPT 1/4"; clamping diameter: d = 6 mm; AISI 316L	7MC7905-0AK06-0AA0
Clamping ring connection unsprung; VA-ring, process connection: G 3/8"; clamping diameter: d = 3 mm; AISI 316L	7MC7905-0AD03-0AA0
Clamping ring connection unsprung; VA-ring, process connection: G 3/8"; clamping diameter: d = 6 mm; AISI 316L	7MC7905-0AD06-0AA0
Clamping ring connection unsprung; VA-ring, process connection: NPT 3/8"; clamping diameter: d = 3 mm; AISI 316L	7MC7905-0AL03-0AA0
Clamping ring connection unsprung; VA-ring, process connection: NPT 3/8"; clamping diameter: d = 6 mm; AISI 316L	7MC7905-0AL06-0AA0
Clamping ring connection unsprung; VA-ring, process connection: G 1/2"; clamping diameter: d = 3 mm; AISI 316L	7MC7905-0AE03-0AA0
Clamping ring connection unsprung; VA-ring, process connection: G 1/2"; clamping diameter: d = 6 mm; AISI 316L	7MC7905-0AE06-0AA0
Clamping ring connection unsprung; VA-ring, process connection: NPT 1/2"; clamping diameter: d = 3 mm; AISI 316L	7MC7905-0AM03-0AA0
Clamping ring connection unsprung; VA-ring, process connection: NPT 1/2"; clamping diameter: d = 6 mm; AISI 316L	7MC7905-0AM06-0AA0
Clamping ring connection unsprung; PTFE-ring	
Clamping ring connection unsprung; PTFE-ring; process connection: G 1/8"; clamping diameter: d = 3 mm; AISI 316L	7MC7905-0BB03-0AA0
Clamping ring connection unsprung; PTFE-ring; process connection: NPT 1/8"; clamping diameter: d = 3 mm; AISI 316L	7MC7905-0BJ03-0AA0
Clamping ring connection unsprung; PTFE-ring; process connection: G 1/4"; clamping diameter: d = 3 mm; AISI 316L	7MC7905-0BC03-0AA0
Clamping ring connection unsprung; PTFE-ring; process connection: G 1/4"; clamping diameter: d = 6 mm; AISI 316L	7MC7905-0BC06-0AA0
Clamping ring connection unsprung; PTFE-ring; process connection: NPT 1/4"; clamping diameter: d = 3 mm; AISI 316L	7MC7905-0BK03-0AA0
Clamping ring connection unsprung; PTFE-ring; process connection: NPT 1/4"; clamping diameter: d = 6 mm; AISI 316L	7MC7905-0BK06-0AA0
Clamping ring connection unsprung; PTFE-ring; process connection: G 3/8"; clamping diameter: d = 3 mm; AISI 316L	7MC7905-0BD03-0AA0
Clamping ring connection unsprung; PTFE-ring; process connection: G 3/8"; clamping diameter: d = 6 mm; AISI 316L	7MC7905-0BD06-0AA0
Clamping ring connection unsprung; PTFE-ring; process connection: NPT 3/8"; clamping diameter: d = 3 mm; AISI 316L	7MC7905-0BL03-0AA0
Clamping ring connection unsprung; PTFE-ring; process connection: NPT 3/8"; clamping diameter: d = 6 mm; AISI 316L	7MC7905-0BL06-0AA0
Clamping ring connection unsprung; PTFE-ring; process connection: G 1/2"; clamping diameter: d = 3 mm; AISI 316L	7MC7905-0BE03-0AA0
Clamping ring connection unsprung; PTFE-ring; process connection: G 1/2"; clamping diameter: d = 6 mm; AISI 316L	7MC7905-0BE06-0AA0
Clamping ring connection unsprung; PTFE-ring; process connection: NPT 1/2"; clamping diameter: d = 3 mm; AISI 316L	7MC7905-0BM03-0AA0
Clamping ring connection unsprung; PTFE-ring; process connection: NPT 1/2"; clamping diameter: d = 6 mm; AISI 316L	7MC7905-0BM06-0AA0
SITRANS TS200 thermowell incl. clamping ring connection unsprung; VA-ring Diameter (OD, ID, SD) 9 / 7 / 6 mm	
SITRANS TS200 thermowells; material 1.4404 AISI 316L; clamping ring connection unsprung; VA-ring; process connection: G 1/4"; diameter (OD, ID, SD) 9 / 7 / 6; installation length U = 60 mm	7MC7908-1AC21-0AA0
SITRANS TS200 thermowells; material 1.4404 AISI 316L; clamping ring connection unsprung; VA-ring; process connection: NPT 1/4"; diameter (OD, ID, SD) 9 / 7 / 6; installation length U = min. 55.5 mm, max. 60 mm	7MC7908-1AK21-0AA0
SITRANS TS200 thermowells; material 1.4404 AISI 316L; clamping ring connection unsprung; VA-ring; process connection: G 3/8"; diameter (OD, ID, SD) 9 / 7 / 6; installation length U = 65 mm	7MC7908-1AD21-0AA0
SITRANS TS200 thermowells; material 1.4404 AISI 316L; clamping ring connection unsprung; VA-ring; process connection: NPT 3/8"; diameter (OD, ID, SD) 9 / 7 / 6; installation length U = min. 56 mm, max. 60 mm	7MC7908-1AL21-0AA0
SITRANS TS200 thermowells; material 1.4404 AISI 316L; clamping ring connection unsprung; VA-ring; process connection: G 1/2"; diameter (OD, ID, SD) 9 / 7 / 6; installation length U = 65 mm	7MC7908-1AE21-0AA0

	Article No.
SITRANS TS200 thermowells; material 1.4404 AISI 316L; clamping ring connection unsprung; VA-ring; process connection: NPT 1/2"; diameter (OD, ID, SD) 9 / 7 / 6; installation length U = min. 58 mm, max. 63.5 mm	7MC7908-1AM21-0AA0
SITRANS TS200 thermowells; material 1.4404 AISI 316L; clamping ring connection unsprung; VA-ring; process connection: G 1/4"; diameter (OD, ID, SD) 9 / 7 / 6; installation length U = 110 mm	7MC7908-1AC22-0AA0
SITRANS TS200 thermowells; material 1.4404 AISI 316L; clamping ring connection unsprung; VA-ring; process connection: NPT 1/4"; diameter (OD, ID, SD) 9 / 7 / 6; installation length U = min. 105.5 mm, max. 110 mm	7MC7908-1AK22-0AA0
SITRANS TS200 thermowells; material 1.4404 AISI 316L; clamping ring connection unsprung; VA-ring; process connection: G 3/8"; diameter (OD, ID, SD) 9 / 7 / 6; installation length U = 115 mm	7MC7908-1AD22-0AA0
SITRANS TS200 thermowells; material 1.4404 AISI 316L; clamping ring connection unsprung; VA-ring; process connection: NPT 3/8"; diameter (OD, ID, SD) 9 / 7 / 6; installation length U = min. 106 mm, max. 110 mm	7MC7908-1AL22-0AA0
SITRANS TS200 thermowells; material 1.4404 AISI 316L; clamping ring connection unsprung; VA-ring; process connection: G 1/2"; diameter (OD, ID, SD) 9 / 7 / 6; installation length U = 115 mm	7MC7908-1AE22-0AA0
SITRANS TS200 thermowells; material 1.4404 AISI 316L; clamping ring connection unsprung; VA-ring; process connection: NPT 1/2"; diameter (OD, ID, SD) 9 / 7 / 6; installation length U = min. 108 mm, max. 113.5 mm	7MC7908-1AM22-0AA0
SITRANS TS200 thermowells; material 1.4404 AISI 316L; clamping ring connection unsprung; VA-ring; process connection: G 1/4"; diameter (OD, ID, SD) 9 / 7 / 6; installation length U = 160 mm	7MC7908-1AC23-0AA0
SITRANS TS200 thermowells; material 1.4404 AISI 316L; clamping ring connection unsprung; VA-ring; process connection: NPT 1/4"; diameter (OD, ID, SD) 9 / 7 / 6; installation length U = min. 155.5 mm, max. 160 mm	7MC7908-1AK23-0AA0
SITRANS TS200 thermowells; material 1.4404 AISI 316L; clamping ring connection unsprung; VA-ring; process connection: G 3/8"; diameter (OD, ID, SD) 9 / 7 / 6; installation length U = 165 mm	7MC7908-1AD23-0AA0
SITRANS TS200 thermowells; material 1.4404 AISI 316L; clamping ring connection unsprung; VA-ring; process connection: NPT 3/8"; diameter (OD, ID, SD) 9 / 7 / 6; installation length U = min. 156 mm, max. 160 mm	7MC7908-1AL23-0AA0
SITRANS TS200 thermowells; material 1.4404 AISI 316L; clamping ring connection unsprung; VA-ring; process connection: G 1/2"; diameter (OD, ID, SD) 9 / 7 / 6; installation length U = 165 mm	7MC7908-1AE23-0AA0
SITRANS TS200 thermowells; material 1.4404 AISI 316L; clamping ring connection unsprung; VA-ring; process connection: NPT 1/2"; diameter (OD, ID, SD) 9 / 7 / 6; installation length U = min. 158 mm, max. 163.5 mm	7MC7908-1AM23-0AA0
SITRANS TS200 thermowells; material 1.4404 AISI 316L; clamping ring connection unsprung; VA-ring; process connection: G 1/4"; diameter (OD, ID, SD) 9 / 7 / 6; installation length U = 210 mm	7MC7908-1AC24-0AA0
SITRANS TS200 thermowells; material 1.4404 AISI 316L; clamping ring connection unsprung; VA-ring; process connection: NPT 1/4"; diameter (OD, ID, SD) 9 / 7 / 6; installation length U = min. 205.5 mm, max. 210 mm	7MC7908-1AK24-0AA0
SITRANS TS200 thermowells; material 1.4404 AISI 316L; clamping ring connection unsprung; VA-ring; process connection: G 3/8"; diameter (OD, ID, SD) 9 / 7 / 6; installation length U = 215 mm	7MC7908-1AD24-0AA0
SITRANS TS200 thermowells; material 1.4404 AISI 316L; clamping ring connection unsprung; VA-ring; process connection: NPT 3/8"; diameter (OD, ID, SD) 9 / 7 / 6; installation length U = min. 206 mm, max. 210 mm	7MC7908-1AL24-0AA0
SITRANS TS200 thermowells; material 1.4404 AISI 316L; clamping ring connection unsprung; VA-ring; process connection: G 1/2"; diameter (OD, ID, SD) 9 / 7 / 6; installation length U = 215 mm	7MC7908-1AE24-0AA0

© Siemens AG 2025

Selection and ordering data (continued)

	Article No.
SITRANS TS200 thermowells; material 1.4404 AISI 316L; clamping ring connection unsprung; VA-ring; process connection: NPT 1/2"; diameter (OD, ID, SD) 9 / 7 / 6; installation length U = min. 208 mm, max. 213.5 mm	7MC7908-1AM24-0AA0
SITRANS TS200 thermowells; material 1.4404 AISI 316L; clamping ring connection unsprung; VA-ring; process connection: G 1/4"; diameter (OD, ID, SD) 9 / 7 / 6; installation length U = 310 mm	7MC7908-1AC25-0AA0
SITRANS TS200 thermowells; material 1.4404 AISI 316L; clamping ring connection unsprung; VA-ring; process connection: NPT 1/4"; diameter (OD, ID, SD) 9 / 7 / 6; installation length U = min. 305.5 mm, 310 mm	7MC7908-1AK25-0AA0
SITRANS TS200 thermowells; material 1.4404 AISI 316L; clamping ring connection unsprung; VA-ring; process connection: G 3/8"; diameter (OD, ID, SD) 9 / 7 / 6; installation length U = 315 mm	7MC7908-1AD25-0AA0
SITRANS TS200 thermowells; material 1.4404 AISI 316L; clamping ring connection unsprung; VA-ring; process connection: NPT 3/8"; diameter (OD, ID, SD) 9 / 7 / 6; installation length U = min. 306 mm, max. 310 mm	7MC7908-1AL25-0AA0
SITRANS TS200 thermowells; material 1.4404 AISI 316L; clamping ring connection unsprung; VA-ring; process connection: G 1/2"; diameter (OD, ID, SD) 9 / 7 / 6; installation length U = 315 mm	7MC7908-1AE25-0AA0
SITRANS TS200 thermowells; material 1.4404 AISI 316L; clamping ring connection unsprung; VA-ring; process connection: NPT 1/2"; diameter (OD, ID, SD) 9 / 7 / 6; installation length U = min. 308 mm, 313.5 mm	7MC7908-1AM25-0AA0
SITRANS TS200 thermowells; material 1.4404 AISI 316L; clamping ring connection unsprung; VA-ring; process connection: G 1/4"; diameter (OD, ID, SD) 9 / 7 / 6; installation length U = 410 mm	7MC7908-1AC26-0AA0
SITRANS TS200 thermowells; material 1.4404 AISI 316L; clamping ring connection unsprung; VA-ring; process connection: NPT 1/4"; diameter (OD, ID, SD) 9 / 7 / 6; installation length U = min. 405.5 mm, max. 410 mm	7MC7908-1AK26-0AA0
SITRANS TS200 thermowells; material 1.4404 AISI 316L; clamping ring connection unsprung; VA-ring; process connection: G 3/8"; diameter (OD, ID, SD) 9 / 7 / 6; installation length U = 415 mm	7MC7908-1AD26-0AA0
SITRANS TS200 thermowells; material 1.4404 AISI 316L; clamping ring connection unsprung; VA-ring; process connection: NPT 3/8"; diameter (OD, ID, SD) 9 / 7 / 6; installation length U = min. 406 mm, max. 410 mm	7MC7908-1AL26-0AA0
SITRANS TS200 thermowells; material 1.4404 AISI 316L; clamping ring connection unsprung; VA-ring; process connection: G 1/2"; diameter (OD, ID, SD) 9 / 7 / 6; installation length U = 415 mm	7MC7908-1AE26-0AA0
SITRANS TS200 thermowells; material 1.4404 AISI 316L; clamping ring connection unsprung; VA-ring; process connection: NPT 1/2"; diameter (OD, ID, SD) 9 / 7 / 6; installation length U = min. 408 mm, max. 413.5 mm	7MC7908-1AM26-0AA0
SITRANS TS200 thermowell incl. clamping ring connection unsprung; VA-ring **Diameter (OD, ID, SD) 5 / 3.5 / 3 mm**	
SITRANS TS200 thermowells; material 1.4404 AISI 316L; clamping ring connection unsprung; VA-ring; process connection: G 1/8"; diameter (OD, ID, SD) 5 / 3.5 / 3; installation length U = 60 mm	7MC7908-1AB11-0AA0
SITRANS TS200 thermowells; material 1.4404 AISI 316L; clamping ring connection unsprung; VA-ring; process connection: NPT 1/8"; diameter (OD, ID, SD) 5 / 3.5 / 3; installation length U = min. 54 mm, max. 56.5 mm	7MC7908-1AJ11-0AA0
SITRANS TS200 thermowells; material 1.4404 AISI 316L; clamping ring connection unsprung; VA-ring; process connection: G 1/4"; diameter (OD, ID, SD) 5 / 3.5 / 3; installation length U = 60 mm	7MC7908-1AC11-0AA0
SITRANS TS200 thermowells; material 1.4404 AISI 316L; clamping ring connection unsprung; VA-ring; process connection: NPT 1/4"; diameter (OD, ID, SD) 5 / 3.5 / 3; installation length U = min. 55.5 mm, max. 60 mm	7MC7908-1AK11-0AA0
SITRANS TS200 thermowells; material 1.4404 AISI 316L; clamping ring connection unsprung; VA-ring; process connection: G 3/8"; diameter (OD, ID, SD) 5 / 3.5 / 3; installation length U = 65 mm	7MC7908-1AD11-0AA0

	Article No.
SITRANS TS200 thermowells; material 1.4404 AISI 316L; clamping ring connection unsprung; VA-ring; process connection: NPT 3/8"; diameter (OD, ID, SD) 5 / 3.5 / 3; installation length U = min. 56 mm, max. 60 mm	7MC7908-1AL11-0AA0
SITRANS TS200 thermowells; material 1.4404 AISI 316L; clamping ring connection unsprung; VA-ring; process connection: G 1/2"; diameter (OD, ID, SD) 5 / 3.5 / 3; installation length U = 65 mm	7MC7908-1AE11-0AA0
SITRANS TS200 thermowells; material 1.4404 AISI 316L; clamping ring connection unsprung; VA-ring; process connection: NPT 1/2"; diameter (OD, ID, SD) 5 / 3.5 / 3; installation length U = min. 58 mm, max. 63.5 mm	7MC7908-1AM11-0AA0
SITRANS TS200 thermowells; material 1.4404 AISI 316L; clamping ring connection unsprung; VA-ring; process connection: G 1/8"; diameter (OD, ID, SD) 5 / 3.5 / 3; installation length U = 110 mm	7MC7908-1AB12-0AA0
SITRANS TS200 thermowells; material 1.4404 AISI 316L; clamping ring connection unsprung; VA-ring; process connection: NPT 1/8"; diameter (OD, ID, SD) 5 / 3.5 / 3; installation length U = min. 104 mm, max. 106.5 mm	7MC7908-1AJ12-0AA0
SITRANS TS200 thermowells; material 1.4404 AISI 316L; clamping ring connection unsprung; VA-ring; process connection: G 1/4"; diameter (OD, ID, SD) 5 / 3.5 / 3; installation length U = 110 mm	7MC7908-1AC12-0AA0
SITRANS TS200 thermowells; material 1.4404 AISI 316L; clamping ring connection unsprung; VA-ring; process connection: NPT 1/4"; diameter (OD, ID, SD) 5 / 3.5 / 3; installation length U = min. 105.5 mm, max. 110 mm	7MC7908-1AK12-0AA0
SITRANS TS200 thermowells; material 1.4404 AISI 316L; clamping ring connection unsprung; VA-ring; process connection: G 3/8"; diameter (OD, ID, SD) 5 / 3.5 / 3; installation length U = 115 mm	7MC7908-1AD12-0AA0
SITRANS TS200 thermowells; material 1.4404 AISI 316L; clamping ring connection unsprung; VA-ring; process connection: NPT 3/8"; diameter (OD, ID, SD) 5 / 3.5 / 3; installation length U = min. 106 mm, max. 110 mm	7MC7908-1AL12-0AA0
SITRANS TS200 thermowells; material 1.4404 AISI 316L; clamping ring connection unsprung; VA-ring; process connection: G 1/2"; diameter (OD, ID, SD) 5 / 3.5 / 3; installation length U = 115 mm	7MC7908-1AE12-0AA0
SITRANS TS200 thermowells; material 1.4404 AISI 316L; clamping ring connection unsprung; VA-ring; process connection: NPT 1/2"; diameter (OD, ID, SD) 5 / 3.5 / 3; installation length U = min. 108 mm, max. 113.5 mm	7MC7908-1AM12-0AA0
SITRANS TS200 thermowells; material 1.4404 AISI 316L; clamping ring connection unsprung; VA-ring; process connection: G 1/8"; diameter (OD, ID, SD) 5 / 3.5 / 3; installation length U = 160 mm	7MC7908-1AB13-0AA0
SITRANS TS200 thermowells; material 1.4404 AISI 316L; clamping ring connection unsprung; VA-ring; process connection: NPT 1/8"; diameter (OD, ID, SD) 5 / 3.5 / 3; installation length U = min. 154 mm, max. 156.5 mm	7MC7908-1AJ13-0AA0
SITRANS TS200 thermowells; material 1.4404 AISI 316L; clamping ring connection unsprung; VA-ring; process connection: G 1/4"; diameter (OD, ID, SD) 5 / 3.5 / 3; installation length U = 160 mm	7MC7908-1AC13-0AA0
SITRANS TS200 thermowells; material 1.4404 AISI 316L; clamping ring connection unsprung; VA-ring; process connection: NPT 1/4"; diameter (OD, ID, SD) 5 / 3.5 / 3; installation length U = min. 155.5 mm, max. 160 mm	7MC7908-1AK13-0AA0
SITRANS TS200 thermowells; material 1.4404 AISI 316L; clamping ring connection unsprung; VA-ring; process connection: G 3/8"; diameter (OD, ID, SD) 5 / 3.5 / 3; installation length U = 165 mm	7MC7908-1AD13-0AA0
SITRANS TS200 thermowells; material 1.4404 AISI 316L; clamping ring connection unsprung; VA-ring; process connection: NPT 3/8"; diameter (OD, ID, SD) 5 / 3.5 / 3; installation length U = min. 156 mm, max. 160 mm	7MC7908-1AL13-0AA0
SITRANS TS200 thermowells; material 1.4404 AISI 316L; clamping ring connection unsprung; VA-ring; process connection: G 1/2"; diameter (OD, ID, SD) 5 / 3.5 / 3; installation length U = 165 mm	7MC7908-1AE13-0AA0

© Siemens AG 2025

Selection and ordering data (continued)

	Article No.
SITRANS TS200 thermowells; material 1.4404 AISI 316L; clamping ring connection unsprung; VA-ring; process connection: NPT 1/2"; diameter (OD, ID, SD) 5 / 3.5 / 3; installation length U = min. 158 mm, max. 163.5 mm	7MC7908-1AM13-0AA0
SITRANS TS200 thermowells; material 1.4404 AISI 316L; clamping ring connection unsprung; VA-ring; process connection: G 1/8"; diameter (OD, ID, SD) 5 / 3.5 / 3; installation length U = 210 mm	7MC7908-1AB14-0AA0
SITRANS TS200 thermowells; material 1.4404 AISI 316L; clamping ring connection unsprung; VA-ring; process connection: NPT 1/8"; diameter (OD, ID, SD) 5 / 3.5 / 3; installation length U = min. 204 mm, max. 206.5 mm	7MC7908-1AJ14-0AA0
SITRANS TS200 thermowells; material 1.4404 AISI 316L; clamping ring connection unsprung; VA-ring; process connection: G 1/4"; diameter (OD, ID, SD) 5 / 3.5 / 3; installation length U = 210 mm	7MC7908-1AC14-0AA0
SITRANS TS200 thermowells; material 1.4404 AISI 316L; clamping ring connection unsprung; VA-ring; process connection: NPT 1/4"; diameter (OD, ID, SD) 5 / 3.5 / 3; installation length U = min. 205.5 mm, max. 210 mm	7MC7908-1AK14-0AA0
SITRANS TS200 thermowells; material 1.4404 AISI 316L; clamping ring connection unsprung; VA-ring; process connection: G 3/8"; diameter (OD, ID, SD) 5 / 3.5 / 3; installation length U = 215 mm	7MC7908-1AD14-0AA0
SITRANS TS200 thermowells; material 1.4404 AISI 316L; clamping ring connection unsprung; VA-ring; process connection: NPT 3/8"; diameter (OD, ID, SD) 5 / 3.5 / 3; installation length U = min. 206 mm, max. 210 mm	7MC7908-1AL14-0AA0
SITRANS TS200 thermowells; material 1.4404 AISI 316L; clamping ring connection unsprung; VA-ring; process connection: G 1/2"; diameter (OD, ID, SD) 5 / 3.5 / 3; installation length U = 215 mm	7MC7908-1AE14-0AA0
SITRANS TS200 thermowells; material 1.4404 AISI 316L; clamping ring connection unsprung; VA-ring; process connection: NPT 1/2"; diameter (OD, ID, SD) 5 / 3.5 / 3; installation length U = min. 208 mm, max. 213.5 mm	7MC7908-1AM14-0AA0
SITRANS TS200 thermowells; material 1.4404 AISI 316L; clamping ring connection unsprung; VA-ring; process connection: G 1/8"; diameter (OD, ID, SD) 5 / 3.5 / 3; installation length U = 310 mm	7MC7908-1AB15-0AA0
SITRANS TS200 thermowells; material 1.4404 AISI 316L; clamping ring connection unsprung; VA-ring; process connection: NPT 1/8"; diameter (OD, ID, SD) 5 / 3.5 / 3; installation length U = min. 304 mm, max. 306.5 mm	7MC7908-1AJ15-0AA0
SITRANS TS200 thermowells; material 1.4404 AISI 316L; clamping ring connection unsprung; VA-ring; process connection: G 1/4"; diameter (OD, ID, SD) 5 / 3.5 / 3; installation length U = 310 mm	7MC7908-1AC15-0AA0

	Article No.
SITRANS TS200 thermowells; material 1.4404 AISI 316L; clamping ring connection unsprung; VA-ring; process connection: NPT 1/4"; diameter (OD, ID, SD) 5 / 3.5 / 3; installation length U = min. 305.5 mm, max. 310 mm	7MC7908-1AK15-0AA0
SITRANS TS200 thermowells; material 1.4404 AISI 316L; clamping ring connection unsprung; VA-ring; process connection: G 3/8"; diameter (OD, ID, SD) 5 / 3.5 / 3; installation length U = 315 mm	7MC7908-1AD15-0AA0
SITRANS TS200 thermowells; material 1.4404 AISI 316L; clamping ring connection unsprung; VA-ring; process connection: NPT 3/8"; diameter (OD, ID, SD) 5 / 3.5 / 3; installation length U = min. 306 mm, max. 310 mm	7MC7908-1AL15-0AA0
SITRANS TS200 thermowells; material 1.4404 AISI 316L; clamping ring connection unsprung; VA-ring; process connection: G 1/2"; diameter (OD, ID, SD) 5 / 3.5 / 3; installation length U = 315 mm	7MC7908-1AE15-0AA0
SITRANS TS200 thermowells; material 1.4404 AISI 316L; clamping ring connection unsprung; VA-ring; process connection: NPT 1/2"; diameter (OD, ID, SD) 5 / 3.5 / 3; installation length U = min. 308 mm, max. 313.5 mm	7MC7908-1AM15-0AA0
SITRANS TS200 thermowells; material 1.4404 AISI 316L; clamping ring connection unsprung; VA-ring; process connection: G 1/8"; diameter (OD, ID, SD) 5 / 3.5 / 3; installation length U = 410 mm	7MC7908-1AB16-0AA0
SITRANS TS200 thermowells; material 1.4404 AISI 316L; clamping ring connection unsprung; VA-ring; process connection: NPT 1/8"; diameter (OD, ID, SD) 5 / 3.5 / 3; installation length U = min. 404 mm, max. 406.5 mm	7MC7908-1AJ16-0AA0
SITRANS TS200 thermowells; material 1.4404 AISI 316L; clamping ring connection unsprung; VA-ring; process connection: G 1/4"; diameter (OD, ID, SD) 5 / 3.5 / 3; installation length U = 410 mm	7MC7908-1AC16-0AA0
SITRANS TS200 thermowells; material 1.4404 AISI 316L; clamping ring connection unsprung; VA-ring; process connection: NPT 1/4"; diameter (OD, ID, SD) 5 / 3.5 / 3; installation length U = min. 405.5 mm, max. 410 mm	7MC7908-1AK16-0AA0
SITRANS TS200 thermowells; material 1.4404 AISI 316L; clamping ring connection unsprung; VA-ring; process connection: G 3/8"; diameter (OD, ID, SD) 5 / 3.5 / 3; installation length U = 415 mm	7MC7908-1AD16-0AA0
SITRANS TS200 thermowells; material 1.4404 AISI 316L; clamping ring connection unsprung; VA-ring; process connection: NPT 3/8"; diameter (OD, ID, SD) 5 / 3.5 / 3; installation length U = min. 406 mm, max. 410 mm	7MC7908-1AL16-0AA0
SITRANS TS200 thermowells; material 1.4404 AISI 316L; clamping ring connection unsprung; VA-ring; process connection: G 1/2"; diameter (OD, ID, SD) 5 / 3.5 / 3; installation length U = 415 mm	7MC7908-1AE16-0AA0
SITRANS TS200 thermowells; material 1.4404 AISI 316L; clamping ring connection unsprung; VA-ring; process connection: NPT 1/2"; diameter (OD, ID, SD) 5 / 3.5 / 3; installation length U = min. 408 mm, max. 413.5 mm	7MC7908-1AM16-0AA0

© Siemens AG 2025

Dimensional drawings

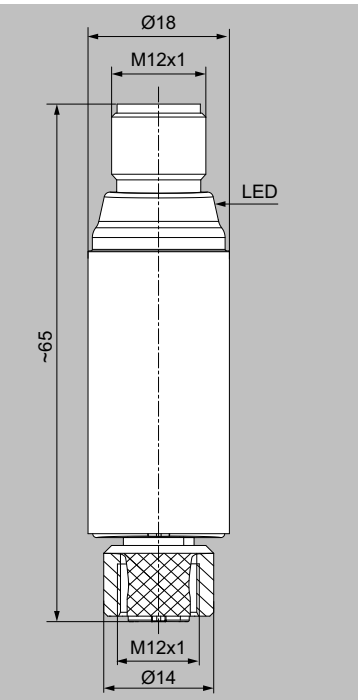

7MC7216-0AD00-0AA0

© Siemens AG 2025

Dimensional drawings (continued)

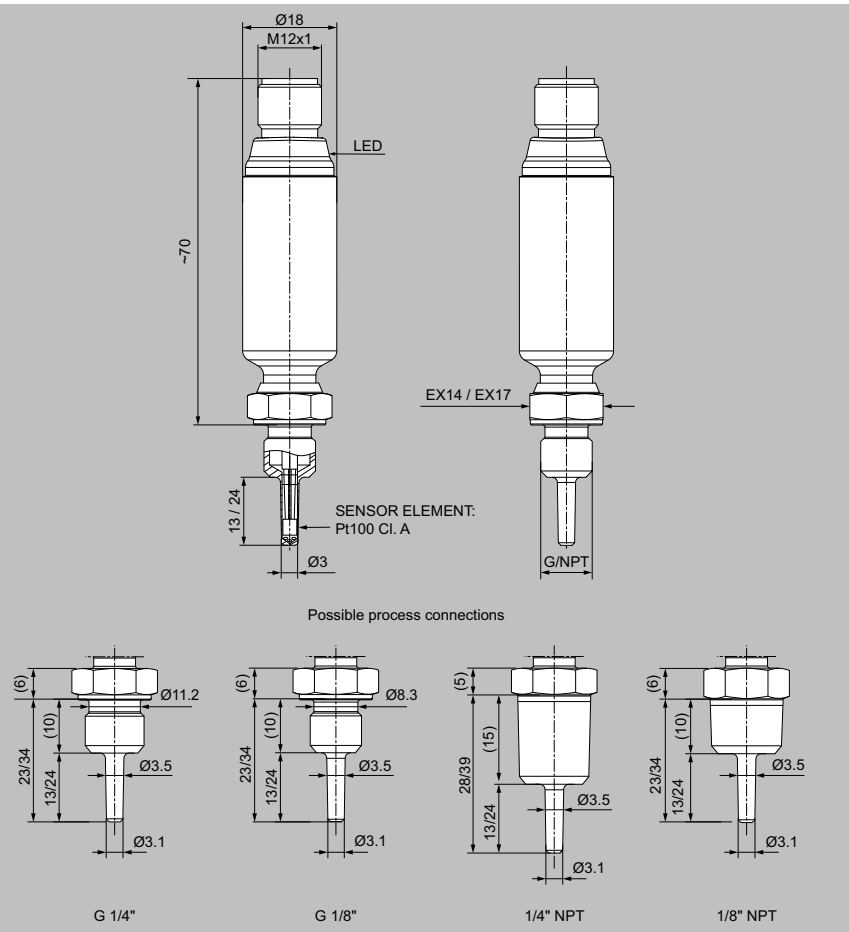

Sensor length	G1/4"	G 1/8"	1/4" NPT	1/8" NPT
13mm	7MC7216-5BB11-0AA0	7MC7216-5BB10-0AA0	7MC7216-5BB14-0AA0	7MC7216-5BB13-0AA0
24mm	7MC7216-5CB11-0AA0	7MC7216-5CB10-0AA0	7MC7216-5CB14-0AA0	7MC7216-5CB13-0AA0

Tolerances (ISO 2768-m): 0.5÷6=±0.1 6÷30=±0.2 30÷120=±0.3

Tolerances (ISO 2768-m): 0.5÷6=±0.1 6÷30=±0.2 30÷120=±0.3

7MC7216-**B00-0AA0 [1)]

[1)] For optional compression fitting, see "Accessories" under "Detailed Product Overview"and under "IO-Link/7MC7216-*"

© Siemens AG 2025

Dimensional drawings (continued)

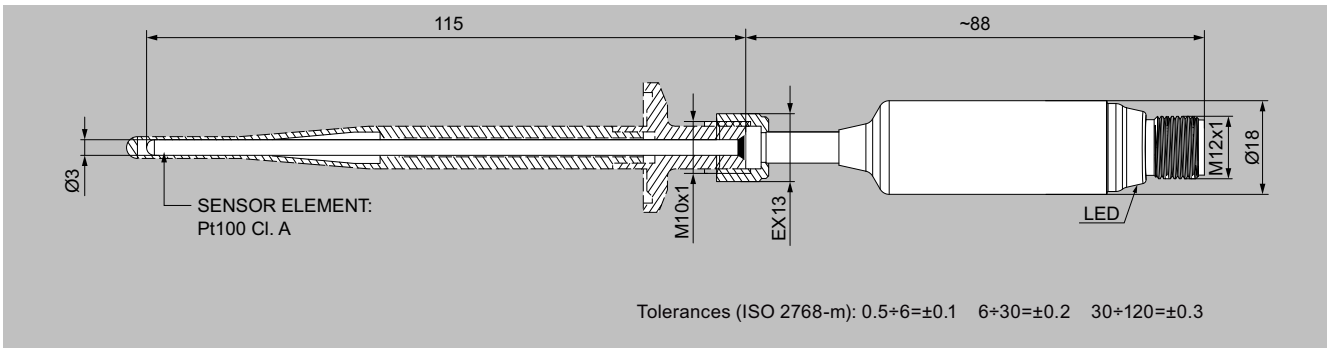

7MC7216-3GB20-0AA0

© Siemens AG 2025

Dimensional drawings

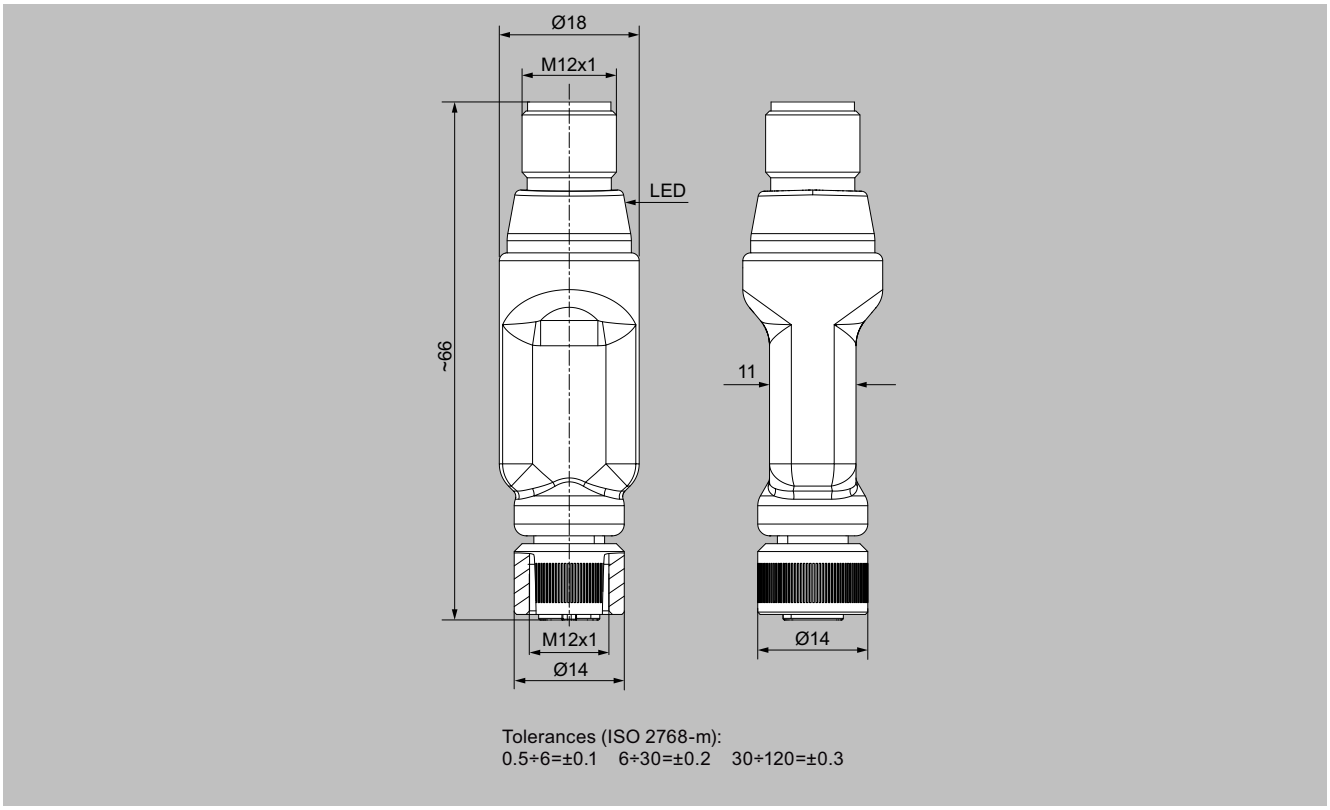

7MC7216-0AC00-0AA0

© Siemens AG 2025

Dimensional drawings (continued)

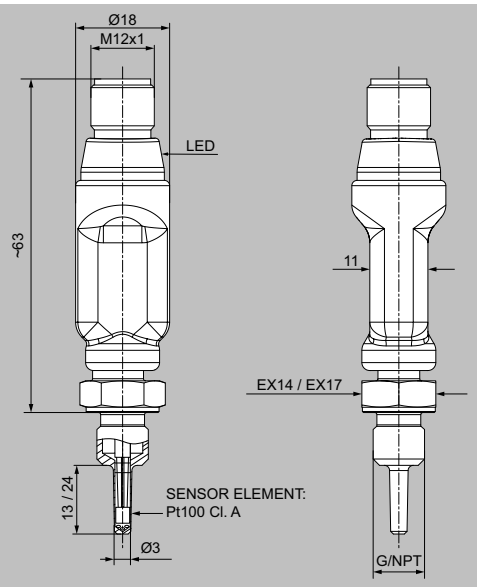

Possible process connections

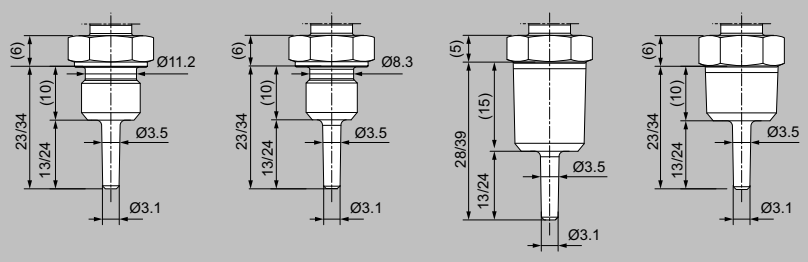

G 1/4" G 1/8" 1/4" NPT 1/8" NPT

Sensor length	G1/4"	G 1/8"	1/4" NPT	1/8" NPT
13 mm	7MC7216-5BA11-0AA0	7MC7216-5BA10-0AA0	7MC7216-5BA14-0AA0	7MC7216-5BA13-0AA0
24 mm	7MC7216-5CA11-0AA0	7MC7216-5CA10-0AA0	7MC7216-5CA14-0AA0	7MC7216-5CA13-0AA0

Tolerances (ISO 2768-m): 0.5÷6=±0.1 6÷30=±0.2 30÷120=±0.3

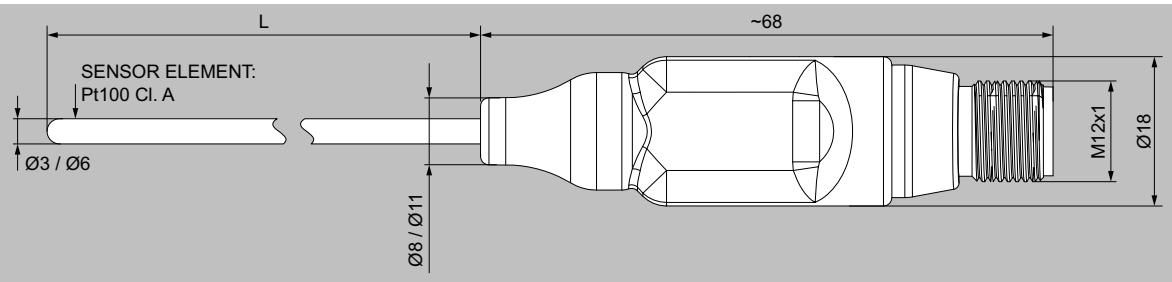

Tolerances (ISO 2768-m): 0.5÷6=±0.1 6÷30=±0.2 30÷120=±0.3

7MC7216-**A00-0AA0