LEX55 Ex ec certified thermocouple for zone 2 and 22

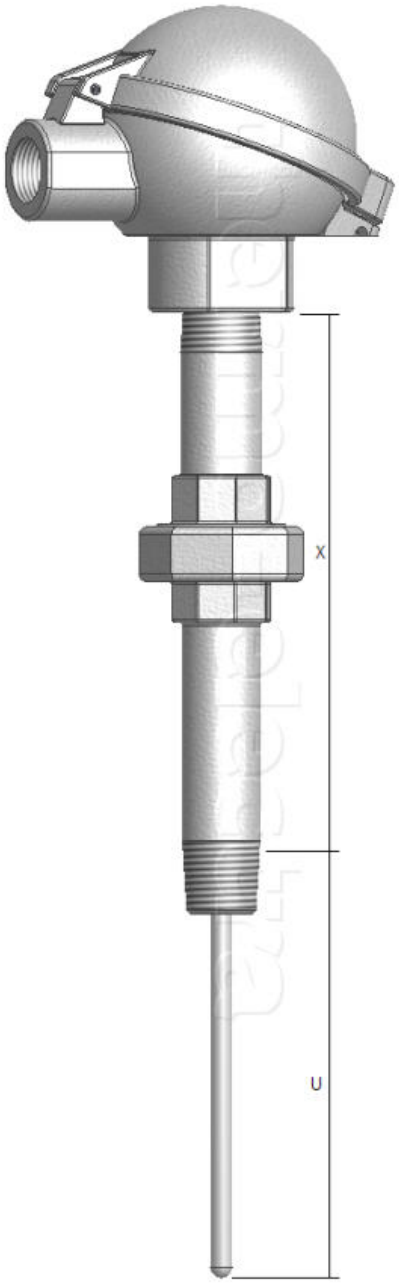

Construction	
ATEX execution	II 3 G Ex ec IIC T6...T1 Gc
ATEX certificate	DEKRA 18ATEX0024 X
IECEx execution	Ex ec IIC T6...T1 Gc
IECEx certificate	IECEx DEK 17.0046X
Suitable for zone	2 en 22
Ingress protection	IP65 / IEC529
Ambient temp. range	-45°C...+80°C, this can be limited depending on the materials applied such as cables, connection heads, junction boxes and transmitters.
Connection head	
Model	DAN-AK (showed), other Ex certified connectionheads possible
Material	Aluminium, Stainless Steel or Plastic
Cable entry	M20x1.5 standard, other threads possible
Measuring insert	
Construction	Springloaded and replaceble
Springaction	>10mm standard, >40mm optional
Diameter	6.0mm standard, other diameters possible
Type	Mineral insulated (MgO)
Thermocouple	
Calibration	K, T, J, E, R, S, B, U, N or L
For duplex	KK, TT, JJ, EE, RR, SS, BB, UU, NN or LL
Accuracy	According to IEC 60584-1
Extension	
Type	Nipple - union - nipple standard, other constructions possible
Material	Stainless Steel
Style / Connection	1/2" NPT standard, other threads possible
Length	150mm standard, other lengths possible
Datasheet notification	
	The LEX55 is the replacement for the LEX45 Ex nA

Ordering code

*This datasheet is purely indicative, build-up of model code may vary from this datasheet.

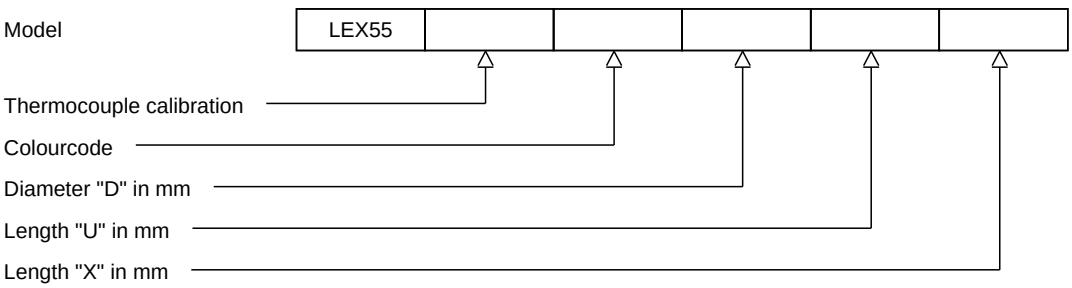

thermo-electra
temperature sensor solutions

Thermo Electra B.V.
Weteringweg 10
2641KM Pijnacker
The Netherlands

Phone +31 (0)15 - 3621200
Fax +31 (0)15 - 3694082
Email sales@thermo.nl
http://www.thermo-electra.com