EXtract 850M for sensors with length 120mm



- Optionally with or without cable protection
- Can be operated by hand up to 2 bar process pressure
- Protection cage can be adjusted when unlocked
- Locking of the immersion tube in the end positions “Measurement” or “Service”
- 76 mm immersion depth (with protection cage extended)
- Further process connections upon request

EXtract 850M is a simple, manually operated retractable probe housing made of stainless steel or plastic. It is suitable for installing Ø12-120mm sensors on tanks and pipes.

Specifications

Process pressure:	0...6 bar
Process temperature:	10...80 °C
Ambient temperature:	-10...70 °C
Sensors:	120 mm Ø 12 PG13.5
Material:	Stainless steel 1.4404 (316L) < Ra 0.78µm; PP
Sealings:	EPDM; FPM (Viton)
Process connections:	Thread NPT 1"; Thread G 1"; Ingold DN25 G 1¼"
Drive unit:	manually operated; axially movable
Feedback:	without
Length of protection cage:	36 mm

Dimensions

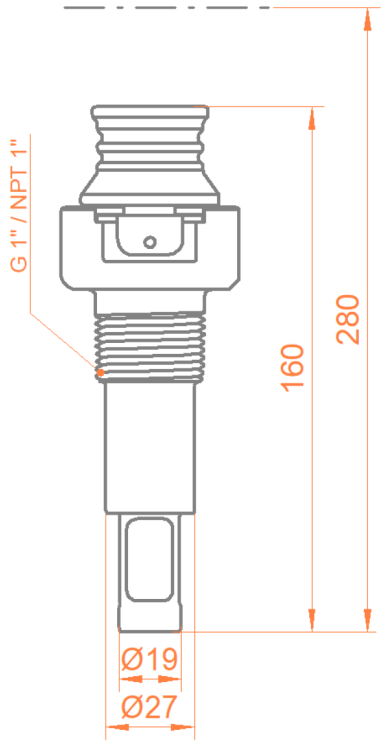

Validity: 26.10.2023/ EXtract 850M_Datasheet_en_240619

Exner Process Equipment GmbH // Carl-Metz-Straße 26 // 76275 Ettlingen // Germany
fon +49 (0)7243-94 54 29-0 // fax +49 (0)7242-94 54 29-99 // mail info@e-p-e.de
Managing directors: Detlef Exner, Michael Tottewitz // Registration court Mannheim, HRB 706 588 // VAT number DE264742343

EXtract 850M for sensors with length 120mm



EXtract 850M - version without cable protection



EXtract 850M with Ingold connection and cable protection

Order code

Code	Material (wetted parts)	Delivery time
PP	PP	2 Weeks
4404	Stainless steel 1.4404 / 316L	2 Weeks

Code	Sealing material (wetted sealings)	Delivery time
EPD	EPDM (FDA/USP VI)	2 Weeks
FPM	FPM (Viton)	2 Weeks

Code	Sensor type	Delivery time
120	120mm PG 13,5 Ø12mm	2 Weeks

Code	Process connection	Delivery time
N10	MNPT 1"	2 Weeks
G10	Thread G1" male	2 Weeks
IN28	Ingold DN25 G1 1/4" O-Ring-position 28mm	2 Weeks

Code	Cable protection	Delivery time
0	without	2 Weeks
1	with cable protection	2 Weeks

Validity: 26.10.2023/ EXtract 850M_Datasheet_en_240619

Exner Process Equipment GmbH // Carl-Metz-Straße 26 // 76275 Ettlingen // Germany
fon +49 (0)7243-94 54 29-0 // fax +49 (0)7242-94 54 29-99 // mail info@e-p-e.de
Managing directors: Detlef Exner, Michael Tottewitz // Registration court Mannheim, HRB 706 588 // VAT number DE264742343