EXtract 830M hygienic installation



- Hygienic design, EHEDG- / 3A-approved process connections
- Automatic locking system with indicators for measurement- and service position
- Automatic safety lock while sensor is removed
- AISI 316L / 1.4404, surface finish Ra<0.78 electropolished
- High variation of process connections and sealing materials
- Up to 16 bar and 140 °C
- Drive unit free of maintenance

EXtract 830M is a manually operated retractable probe housing made of stainless steel for hygienic installation of Ø12-225mm sensors on tanks or pipelines with an unique rotary drive unit.

Specifications

Process pressure:	0...16 bar
Process temperature:	-10...140 °C
Ambient temperature:	-10...70 °C
Sensors:	225 mm Ø12 PG13.5
Materials:	stainless steel 1.4404 /316L
Process surface:	< Ra 0.78µm, electropolished
Sealings:	EPDM/FEP (FDA USP VI), FPM (Viton)/FEP
Process connection:	Ingold DN25 G1¼", HyCIP® OP25/50/55mm, TriClamp 1-1.5“, TriClamp 2", Varivent N DN40-125, Neumo BioControl D50, DIN11851 DN50
Cleaning ports:	G1/8", G1/4", FNPT1/4"
Drive unit:	manual rotary drive
Limit switches:	optional electrical NAMUR switches

Dimensions

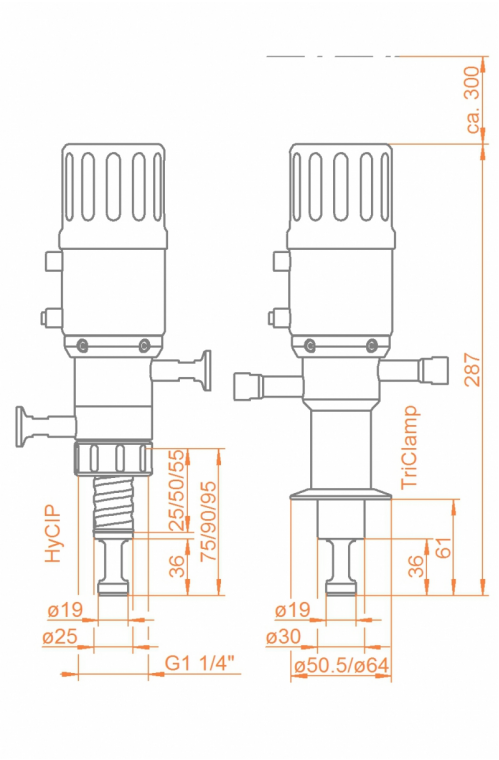

Validity: 01.01.2023/ EXtract 830M_Datasheet_en_240619

Exner Process Equipment GmbH // Carl-Metz-Straße 26 // 76275 Ettlingen // Germany
fon +49 (0)7243-94 54 29-0 // fax +49 (0)7242-94 54 29-99 // mail info@e-p-e.de
Managing directors: Detlef Exner, Michael Tottewitz // Registration court Mannheim, HRB 706 588 // VAT number DE264742343

EXtract 830M hygienic installation

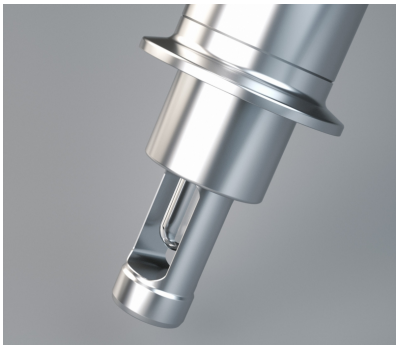

Process Connection TriClamp 1.5" - measuring position



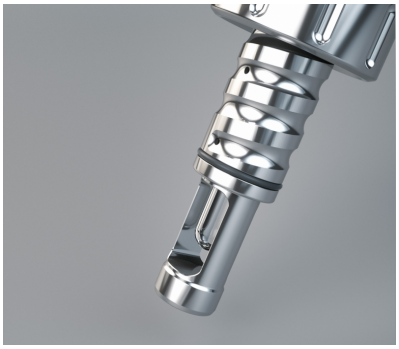

Process connection HyCIP© OP55 - measuring position

Order code

Code	Material (wetted parts)	Delivery time
4404	Stainless steel 1.4404 / 316L	2 Weeks

Code	Sealing material (wetted sealings)	Delivery time
EPD		2 Weeks
FPM	FPM (Viton) / FEP	2 Weeks

Code	Sensor type	Delivery time
225	225mm PG 13,5 gel-filled	2 Weeks
280	280mm PG 13,5 liquid filled	2 Weeks

Code	Process connection	Delivery time
IN28	Ingold DN25 G1 1/4" O-Ring-position 28mm	2 Weeks
IH25	Ingold DN25 G1 1/4" HyCIP® - OP25mm	2 Weeks
IH50	Ingold DN25 G1 1/4" HyCIP® - OP50mm	2 Weeks
IH55	Ingold DN25 G1 1/4" HyCIP® - OP55mm	2 Weeks
VARN	Varivent N DN40-125	3 Weeks
TC15	TriClamp 1-1,5" (OD Ø50.5mm)	3 Weeks
TC20	TriClamp 2.0 (OD Ø64mm)	3 Weeks
BCT5	NEUMO BioControl D50	3 Weeks
MV50	DIN 11851 DN50 (dairy connection)	3 Weeks

Code	Cleaning connection	Delivery time
G18	G 1/8" female thread	2 Weeks
G14	G 1/4" female thread	2 Weeks
N14	1/4" NPT female thread	2 Weeks

Code	Position switch	Delivery time
00	without	2 Weeks
EL	electrical (NAMUR)	2 Weeks

Exner Process Equipment GmbH // Carl-Metz-Straße 26 // 76275 Ettlingen // Germany
fon +49 (0)7243-94 54 29-0 // fax +49 (0)7242-94 54 29-99 // mail info@e-p-e.de
Managing directors: Detlef Exner, Michael Tottewitz // Registration court Mannheim, HRB 706 588 // VAT number DE264742343