EXstatic 310 Thread G1 ¼“ for weld-in socket DN25



- Designed according to hygienic criteria
- Surface finish Ra<0,78 or Ra<0,37
- Stainless steel AISI 316L / 1.4404
- EPDM sealings with FDA and USP VI approval
- Optional sensor protection cage
- Up to 10 bar and 140 °C
- Protection cap for cable connection

Static probe housing for permanent installation of Ø12mm/120mm-sensors on welding sockets DN25 in tanks or pipes

Specifications

Process pressure:	0...10 bar
Process temperature:	-10...140 °C
Material:	1.4404 / 316L
Surface:	Ra<0,78 or Ra<0,37
Sealing material:	EPDM / FDA / USP VI or FPM (Viton)
Material cable guard:	PA6.6 GF30
Certificates:	material, surface, sealing material
Option:	with or without protection cage
Process connection:	G1 1/4" (DN25) O-ring-position 25 mm
Sensors:	120 mm Ø12 PG13,5

Dimensions

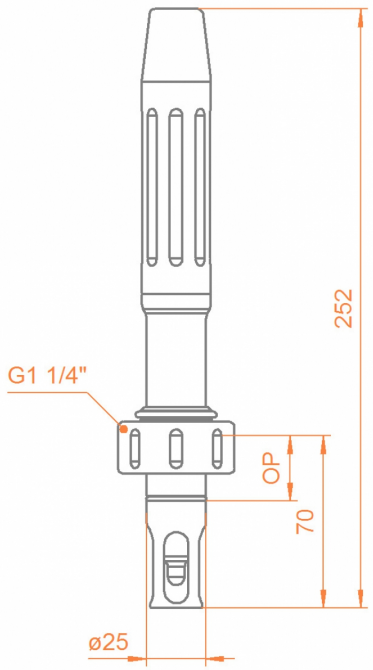

Validity: 01.01.2023/ EXstatic 310_Datasheet_en_240618

Exner Process Equipment GmbH // Carl-Metz-Straße 26 // 76275 Ettlingen // Germany
fon +49 (0)7243-94 54 29-0 // fax +49 (0)7242-94 54 29-99 // mail info@e-p-e.de
Managing directors: Detlef Exner, Michael Tottewitz // Registration court Mannheim, HRB 706 588 // VAT number DE264742343

EXstatic 310 Thread G1 ¼“ for weld-in socket DN25



Protection cage on EXstatic 310



EXstatic 310 - without protection cage



Installation example: left EXstatic 310, right EXstatic 315

Order code

Code	Material (wetted parts)	Delivery time
0408	Stainless Steel 1.4404 / 316L Ra0,78	2 Weeks
0404	Stainless Steel 1.4404 / 316L Ra0,37	4 Weeks

Code	Sealing material (wetted sealings)	Delivery time
EPD	EPDM (FDA/USP VI)	2 Weeks
FPM	FPM (Viton)	2 Weeks

Code	Sensor type	Delivery time
120	120mm PG 13,5 Ø12mm	2 Weeks

Code	Process connection	Delivery time
IN25	G1 1/4" (DN25) O-ring-position 25mm	2 Weeks

Code	Immersion length	Delivery time
070	70mm under process connection	2 Weeks

Code	Protection cage	Delivery time
0	without	2 Weeks
1	with protection cage	2 Weeks

Validity: 01.01.2023/ EXstatic 310_Datasheet_en_240618

Exner Process Equipment GmbH // Carl-Metz-Straße 26 // 76275 Ettlingen // Germany
fon +49 (0)7243-94 54 29-0 // fax +49 (0)7242-94 54 29-99 // mail info@e-p-e.de
Managing directors: Detlef Exner, Michael Tottewitz // Registration court Mannheim, HRB 706 588 // VAT number DE264742343