# EXconnect 170 Connection hose for rectractable housings

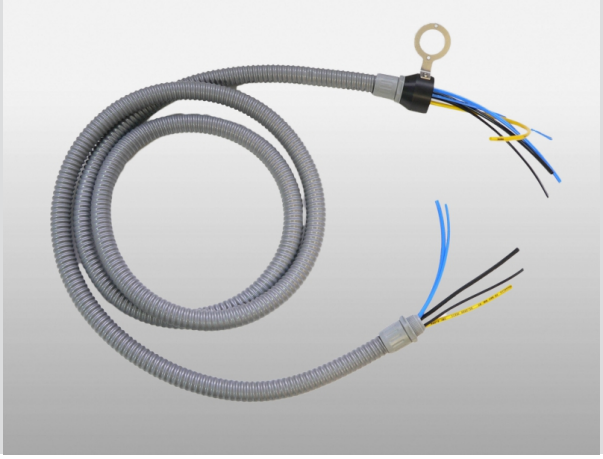

- All required connection tubes are integrated
- Matching fasteners for various probe housing types possible
- PG29 connection on control unit side
- Quick and easy installation
- Additional control tubes for cleaning valves are integrated
- Available in suitable length
- Size and color-coded control tubes for confusion-free connection

EXconnect 170 is a multi-connection hose for quick and easy installation between a cleaning system of series EXmatic 470/471 and a pneumatic retractable probe housing of EXmatic 8XX series and their associated flushing valves.

## Specifications

| | |
|---|---|
| Length: | 3 m, 5 m oder 10 m |
| Material: | PVC (grey) |
| Ambient temperature: | -10...55 °C |
| Fixing on control unit: | PG29 gland |
| Fixing on armature: | fixing angle EXtract8XX |
| Tubes drive unit: | 2x Ø4/6 mm (blue/black) |
| Tubes limit switches: | 2x Ø2/4 mm (blue/black) |
| Tubes cleaning: | up to 2x Ø4/6 mm (yellow/green/grey) |
| Tubes drain: | optional 1x Ø4/6 mm (red) |

## Dimensions

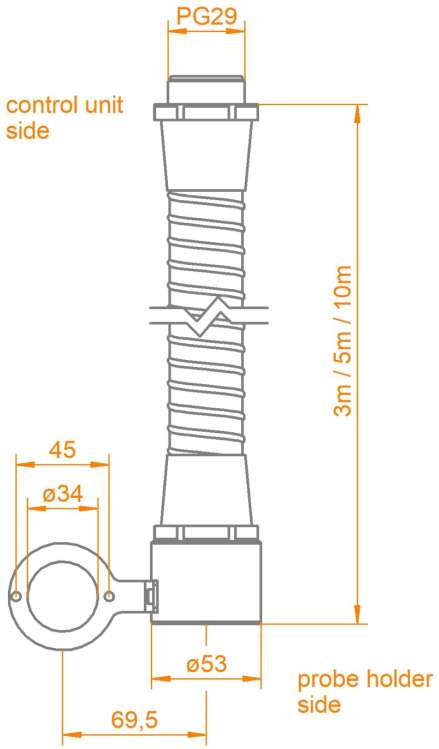


Validity: 01.01.2023/ EXconnect 170_Datasheet_en_240619

Exner Process Equipment GmbH // Carl-Metz-Straße 26 // 76275 Ettlingen // Germany
fon +49 (0)7243-94 54 29-0 // fax +49 (0)7242-94 54 29-99 // mail info@e-p-e.de
Managing directors: Detlef Exner, Michael Tottewitz // Registration court Mannheim, HRB 706 588 // VAT number DE264742343

# EXconnect 170 Connection hose for rectractable housings



EXconnect connected to retractable probe housing





Measuring point with probe housing, flow-through fitting and control unit

## Order code

| Code | Length of connecting hose | Delivery time |
|---|---|---|
| 03 | 3 meters | 2 Weeks |
| 05 | 5 meters | 2 Weeks |
| 10 | 10 meters | 2 Weeks |

| Code | Cleaning valve connection | Delivery time |
|---|---|---|
| 1 | one additional 6mm pneumatic tube (yellow) for one cleaning valve | 2 Weeks |
| 2 | two additional 6mm pneumatic tube (yellow / green) for two cleaning valves | 2 Weeks |
| 3 | three additional 6mm pneumatic tube (yellow / green / grey) for three cleaning valves | 2 Weeks |

| Code | Drain valve connection | Delivery time |
|---|---|---|
| 0 | without | 2 Weeks |
| 1 | one additional 6mm pneumatic tube (red) | 2 Weeks |

| Code | Fastening angle | Delivery time |
|---|---|---|
| EX | for EXtract 8XX | 2 Weeks |

Validity: 01.01.2023/ EXconnect 170_Datasheet_en_240619

Exner Process Equipment GmbH // Carl-Metz-Straße 26 // 76275 Ettlingen // Germany
fon +49 (0)7243-94 54 29-0 // fax +49 (0)7242-94 54 29-99 // mail info@e-p-e.de
Managing directors: Detlef Exner, Michael Tottewitz // Registration court Mannheim, HRB 706 588 // VAT number DE264742343