EXcap 110 Set of optical reference filters



- Verification, adjustment or calibration of Exner-NIR sensors
- Individually selectable single filters
- Filters are traceable according to NIST standard
- No fluids for calibration or verification necessary
- Factory verification with certificate possible
- Optimal fixation during verification or calibration
- Very easy handling

EXcap 110 is a set of optical reference filters for verification or adjustment of Exner-NIR sensors. This set can be equipped with up to three individually selectable single filters to verify sensors in their ideal measuring range.

Specifications

Box dimensions:	120x116x40 mm
Box material:	PP light grey
Quantity of filters:	3 pieces
Filter dimensions:	36x17 mm
Filter material:	POM black
Path length:	>5 mm
Shaft diameter:	12 mm
Absorption points:	0.35AU, 1...6AU
Certificate:	inclusive

Dimensions

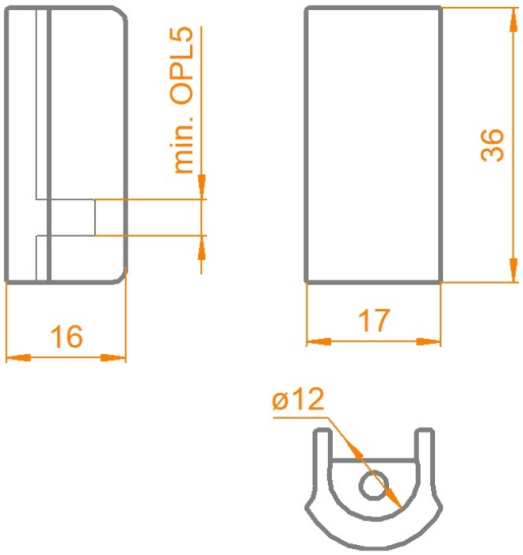

Exner Process Equipment GmbH // Carl-Metz-Straße 26 // 76275 Ettlingen // Germany
fon +49 (0)7243-94 54 29-0 // fax +49 (0)7242-94 54 29-99 // mail info@e-p-e.de
Managing directors: Detlef Exner, Michael Tottewitz // Registration court Mannheim, HRB 706 588 // VAT number DE264742343

EXcap 110 Set of optical reference filters



EXcap 110 on sensor EXcell 231





Reference filter EXcap 110

Order code

Code	Filter 1	Delivery time
03	0,35 AU / 55% turbidity	2 Weeks
10	1 AU / 90% turbidity	2 Weeks
20	2 AU / 99% turbidity	2 Weeks
30	3 AU	2 Weeks
40	4 AU	2 Weeks
50	5 AU	2 Weeks
60	6 AU	2 Weeks

Code	Filter 2	Delivery time
00	without filter 2	2 Weeks
10	1 AU / 90% turbidity	2 Weeks
20	2 AU / 99% turbidity	2 Weeks
30	3 AU	2 Weeks
40	4 AU	2 Weeks
50	5 AU	2 Weeks
60	6 AU	2 Weeks

Code	Filter 3	Delivery time
00	without filter 3	2 Weeks
20	2 AU / 99% turbidity	2 Weeks
30	3 AU	2 Weeks
40	4 AU	2 Weeks
50	5 AU	2 Weeks
60	6 AU	2 Weeks

Validity: 01.01.2023/ EXcap 110_Datasheet_en_240613

Exner Process Equipment GmbH // Carl-Metz-Straße 26 // 76275 Ettlingen // Germany
fon +49 (0)7243-94 54 29-0 // fax +49 (0)7242-94 54 29-99 // mail info@e-p-e.de
Managing directors: Detlef Exner, Michael Tottewitz // Registration court Mannheim, HRB 706 588 // VAT number DE264742343