ProtEX-MAX PD8-6060 Explosion-Proof Dual-Input Meter Instruction Manual

ProtEX™ MAX

MeterView Pro
USB Install

FM APPROVED

Dual-Input

- Two (2) 0-20 mA, 4-20 mA, 0-5 V, 1-5 V, and ±10 V Inputs
- Displays Two Process Inputs Simultaneously
- Math Functions Capabilities
- Multi-Pump Alternation Control
- Signal Input Conditioning for Flow & Round Horizontal Tank
- Programmable Displays & Function Keys
- 32-Point, Square Root, or Exponential Linearization
- Modern, Sleek and Practical Enclosure
- Display Mountable at 0°, 90°, 180°, & 270° Degrees
- Explosion-Proof, IP68, NEMA 4X Enclosure
- SafeTouch® Through-Glass Button Programming
- Flanges for Wall or Pipe Mounting
- Superluminous Sunlight Readable Display
- Free USB Programming Software & Cable
- Input Power Options Include 85-265 VAC or 12-24 VDC
- Isolated 24 VDC @ 25 mA Transmitter Power Supply
- Modbus® RTU Communication Protocol Standard

PRECISION DIGITAL CORPORATION
233 South Street • Hopkinton MA 01748 USA
Tel (800) 343-1001 • Fax (508) 655-8990

PRECISION DIGITAL

www.predig.com

Disclaimer

The information contained in this document is subject to change without notice. Precision Digital makes no representations or warranties with respect to the contents hereof and specifically disclaims any implied warranties of merchantability or fitness for a particular purpose.

CAUTION: *Read complete instructions prior to installation and operation of the meter.*	**WARNING**: ***Risk of electric shock or personal injury.***

Warning!

- ***This product is not recommended for life support applications or applications where malfunctioning could result in personal injury or property loss. Anyone using this product for such applications does so at his/her own risk. Precision Digital Corporation shall not be held liable for damages resulting from such improper use.***
- ***Failure to follow installation guidelines could result in death or serious injury. Make sure only qualified personnel perform the installation.***
- ***Never remove the instrument cover in explosive environments when the circuit is live.***
- ***Cover must be fully engaged to meet flameproof/explosion-proof requirements.***
- ***Information in this manual supersedes all enclosure, compliance, and agency approval information included in additional product manuals included with this product.***

Limited Warranty

Precision Digital Corporation warrants this product against defects in material or workmanship for the specified period under “Specifications” from the date of shipment from the factory. Precision Digital’s liability under this limited warranty shall not exceed the purchase value, repair, or replacement of the defective unit.

Registered Trademarks

MeterView® Pro is a registered trademark of Precision Digital Corporation. Modbus® is a Registered Trademark of Schneider Automation Inc. All other trademarks mentioned in this document are the property of their respective owners.

© 2022 Precision Digital Corporation. All rights reserved.

www.predig.com

Table of Contents

Table of Contents ---------- 3
Table of Figures ---------- 4
Introduction ---------- 4
Ordering Information ---------- 5
Specifications ---------- 5
- **General** ---------- 5
- **Dual Process Input** ---------- 6
- **Relays** ---------- 7
- **Isolated 4-20 mA Transmitter Output** ---------- 7
- **Serial Communications** ---------- 8
- **Digital Inputs & Outputs** ---------- 8
- **MeterView Pro** ---------- 8
- **Product Ratings and Approvals;** ---------- 9

Compliance Information ---------- 10
- **Safety** ---------- 10
- **Electromagnetic Compatibility** ---------- 10

EU Declaration of Conformity ---------- 11
Safety Information ---------- 11
Installation ---------- 11
- **Unpacking** ---------- 11
- **Pre-Installed Conduit/Stopping Plug** ---------- 12
- **Mounting** ---------- 12
- **Cover Jam Screw** ---------- 12
- **Transmitter Supply Voltage Selection (P+, P-)** ---------- 12
- **Connections** ---------- 13
  - Required & Factory Wired Connection ---------- 13
  - Connectors Labeling ---------- 14
  - Power Connections ---------- 14
  - Signal Connections ---------- 15
  - Serial Communications Connections ---------- 16
    - Three Wire Connections ---------- 16
  - Using ProVu Serial Adapters ---------- 18
  - Relay Connections ---------- 19
  - Switching Inductive Loads ---------- 19
  - F4 Digital Input Connections ---------- 20
  - 4-20 mA Output Connections ---------- 20
  - Analog Output Transmitter Power Supply ---------- 20
  - Interlock Relay Feature ---------- 20
  - Digital I/O Connections ---------- 21
  - External Switch Contacts ---------- 21

Setup and Programming ---------- 22
- **Overview** ---------- 22
- **SafeTouch® Buttons** ---------- 22
- **Front Buttons and Status LED Indicators** ---------- 23
- **MeterView® Pro Software** ---------- 24
  - MeterView Pro Installation ---------- 24
- **Display Functions & Messages** ---------- 25
- **Main Menu** ---------- 27
- **Setting Numeric Values** ---------- 27
- **Setting Up the Meter (SEtuP)** ---------- 28
  - Setting the Input Signal (InPut) ---------- 28
  - Setting the Decimal Point (dEc Pt) ---------- 29
  - Programming the Meter (Prou) ---------- 29
    - Multi-Point Linearization (L inEAr) ---------- 30
    - MeterView® Pro Software ---------- 30
    - Scaling the Meter without a Signal Source ---------- 30
    - Scaling the Meter for Channel A (SCAL-A) ---------- 30
    - Scaling the Meter for Channel B (SCAL-b) ---------- 30
    - Error Message (Error) ---------- 31
    - Calibrating the Meter with External Source ---------- 31
    - Calibrating the Meter for Channel A (CAL-A) ---------- 31
    - Calibrating the Meter for Channel B (CAL-b) ---------- 31
  - Setting the Display Parameter & Intensity (dSPLAY) ---------- 32
  - Setting the Input Units or Custom Tags (un itS) ---------- 33

Setting the Relay Operation (rELAY) ---------- 34
- Setting the Relay Assignment (ASS iGn) ---------- 34
- Setting the Relay Action ---------- 35
- Programming Set and Reset Points ---------- 35
- Setting Fail-Safe Operation ---------- 35
- Programming Time Delay ---------- 35
- Relay Action for Loss of 4-20 mA Input (Loop Break) ---------- 35

Relay and Alarm Operation Diagrams ---------- 36
- High Alarm Operation (Set > Reset) ---------- 36
- Low Alarm Operation (Set < Reset) ---------- 36
- High Alarm with Fail-Safe Operation (Set > Reset) ---------- 36
- Low Alarm with Fail-Safe Operation (Set < Reset) 36
- Pump Alternation Control Operation ---------- 37
- Relay Sampling Operation ---------- 37
- Signal Loss or Loop Break Relay Operation ---------- 38
- Time Delay Operation ---------- 38

Relay Operation Details ---------- 39
- Overview ---------- 39
- Relays Auto Initialization ---------- 39
- Fail-Safe Operation ---------- 39
- Front Panel LEDs ---------- 40
- Latching and Non-Latching Relay Operation ---------- 40
- Non-Latching Relay (Auto) ---------- 40
- Non-Latching Relay (A-mn An) ---------- 40
- Latching Relay (LAtcH) ---------- 40
- Latching Relay (Lt-CLr) ---------- 41
- Acknowledging Relays ---------- 41
- Pump Alternation Control Applications (ALtErn) ---------- 42
- Setting Up the Interlock Relay (Force On) Feature 43
  - Interlock Relay Operation Example ---------- 43

Scaling the 4-20 mA Analog Output (Aout) ---------- 44
Reset Menu (rESEt) ---------- 44
Control Menu (ContrL) ---------- 44
Setting Up the Password (PASS) ---------- 45
- Protecting or Locking the Meter ---------- 45
- Making Changes to a Password Protected Meter ---------- 45
- Disabling Password Protection ---------- 45

Advanced Features Menu ---------- 46
- Advanced Features Menu & Display Messages ---------- 46
- Noise Filter (F iLtEr) ---------- 48
- Noise Filter Bypass (bypass) ---------- 48
- Rounding Feature (round) ---------- 48
- Modbus RTU Serial Communications (SEr iAL) ---------- 48
- Serial Communications Overview ---------- 49
- Select Menu (SELECt) ---------- 50
- Signal Input Conditioning (Functn) ---------- 50
- Multi-Point Linearization (L inEAr) ---------- 51

Math Function (m Ath) ---------- 52
Math Constants (ConSt) ---------- 52
Low-Flow Cutoff (CutoFF) ---------- 52
Analog Output Programming (AoutPr)---------- 53
Programmable Function Keys User Menu (uSEr) - 53
Tare (tare A, tare B)---------- 55
Internal Calibration (ICAL)---------- 55
Meter Operation ---------- 57
Front Panel Buttons Operation ---------- 57
SafeTouch® Buttons ---------- 57
F4 Operation ---------- 58
Maximum/Minimum Readings---------- 58
Troubleshooting ---------- 59
Diagnostics Menu (d iAG)---------- 59
Determining Software Version ---------- 59
Reset Meter to Factory Defaults---------- 59
Factory Defaults & User Settings---------- 60
Troubleshooting Tips ---------- 62
Service ---------- 63
Mounting Dimensions ---------- 63

Table of Figures

Figure 1. Transmitter Supply Voltage Selection..... 12
Figure 2: Integrated ProVu Required Connections .. 13
Figure 3. Connector Labeling for Fully Loaded PD6060 14
Figure 4. Power Connections..... 14
Figure 5. Transmitters Powered by Internal Supply. 15
Figure 6. Transmitter Powered by Ext. Supply or Self-Powered 15
Figure 7. Voltage Input Connections..... 15
Figure 8: ProtEX-MAX Connections to a Serial Converter 16
Figure 9. Three-Wire RS485 Connection..... 16
Figure 10: RS-485 Wiring..... 17
Figure 11: RS-485 Two-Wire Multi-Drop Wiring..... 18
Figure 12. Relay Connections.....19
Figure 13. AC and DC Loads Protection.....19
Figure 14. Low Voltage DC Loads Protection 19
Figure 15. F4 Digital Input Connections 20
Figure 16. 4-20 mA Output Connections.....20
Figure 17. Interlock Connections 20
Figure 18: Digital I/O Connections 21
Figure 19. Acknowledge Relays w/Function Key or Digital Input 41
Figure 20: General Four-Wire Network Connection..49
Figure 21: General Two-Wire Network Connection...49
Figure 22: Enclosure Dimensions – Front View.....63
Figure 23: Enclosure Dimensions – Side Cross Section View.....63

Introduction

The ProtEX-MAX PD8-6060 offers all the functionality of the ProVu PD6060 as a fully FM, CSA, ATEX, and IECEx approved explosion-proof product. It accepts two inputs of either a process current (4-20 mA) or process voltage (0-5V, 1-5V, etc.) signal. It displays these signals on a dual-line, 6-digit SunBright® sunlight readable display. Its superluminous LED digits make it easily readable in smoke, dust, fog, and, with the optional SunBright® display, even direct sunlight. The meter can be customized such that these two inputs are displayed in a variety of ways, including both at the same time with tags or the result of math functions performed on one or both of the inputs.

The PD8-6060 includes a 24 VDC power supply to drive the transmitter and can be equipped with up to four internal relays and a 4-20 mA analog output. It can be programmed and operated without opening the housing by using the built-in SafeTouch® through-glass buttons or the RS485 serial communication port with free Modbus® protocol.

Various math functions may be applied to the inputs including addition, difference, absolute difference, average, weighted average, multiplication, division, minimum, maximum, draw, ratio, and concentration. This is in addition to the signal input conditioning functions (linear, square root, programmable exponent, or round horizontal tank calculations). The displays, relays, and the analog output may be assigned to input channels A or B, or math result channel C.

The basic model includes an isolated 24 VDC transmitter power supply that can be used to power the input transmitters or other devices. An additional isolated 24 VDC power supply is included with the 4-20 mA output option. A digital input is standard. A fully loaded PD6060 meter has the following: four SPDT relays, 4-20 mA output, and two 24 VDC power supplies.

Ordering Information

SunBright Display Models

85-265 VAC Model	12-24 VDC Model	Options Installed
PD8-6060-6H0	PD8-6060-7H0	No options
PD8-6060-6H7	PD8-6060-7H7	4 relays & 4-20 mA output

WARNING - Cancer and Reproductive Harm - **www.P65Warnings.ca.gov**

Accessories

Model	Description
PDA1232	RS-232 serial adapter
PDA1485	RS-485 serial adapter
PDA7485-I	RS-232 to RS-422/485 isolated converter
PDA8232-N	USB to RS-232 non-isolated converter
PDA8485-I	USB to RS-422/485 isolated converter
PDX6901	Suppressor (snubber): 0.01 µF/470 Ω, 250 VAC

Specifications

Except where noted all specifications apply to operation at +25°C.

General

Display	Line 1: 0.60" (15 mm) high, red LEDs Line 2: 0.46" (12 mm) high, red LEDs 6 digits each (-99999 to 999999), with lead zero blanking
Display Intensity	Eight user selectable intensity levels
Display Update Rate	5/second (200 ms)
Overrange	Display flashes 999999
Underrange	Display flashes -99999
Display Assignment	Display lines 1 & 2 may be assigned to process values for Channels A (Ch-A), B (Ch-B), or C (Ch-C), toggle between (Ch-A & Ch-B, Ch-A & Ch-C, Ch-B & Ch-C, and Ch-A, Ch-B, & Ch-C), toggle between Channel & units, show channel gross value (no tare) or toggle net (tare) and gross values, show relay set points, max & min values, or Modbus input. Line 2 may also be set to show engineering units or be off, with no display.
Programming Methods	Four front panel buttons, digital inputs, PC and MeterView Pro software, or Modbus registers.
Noise Filter	Programmable from 2 to 199 (0 will disable filter)
Filter Bypass	Programmable from 0.1 to 99.9% of calibrated span
Recalibration	All ranges are calibrated at the factory. Recalibration is recommended at least every 12 months.
Max/Min Display	Max/min readings reached by the process are stored until reset by the user or until power to the meter is cycled.
Password	Three programmable passwords restrict modification of programmed settings. Pass 1: Allows use of function keys and digital inputs Pass 2: Allows use of function keys, digital inputs and editing set/reset points Pass 3: Restricts all programming, function keys, and digital inputs.
Non-Volatile Memory	All programmed settings are stored in non-volatile memory for a minimum of ten years if power is lost.
Power Options	85-265 VAC 50/60 Hz, 90-265 VDC, 20 W max or 12-24 VDC ± 10%, 15 W max Powered over USB for configuration only.
Fuse	Required external fuse: UL Recognized, 5 A max, slow blow; up to 6 meters may share one 5 A fuse
Isolated Transmitter Power Supply	Terminals P+ & P-: 24 VDC ± 10%. Selectable for 24, 10, or 5 VDC supply (internal jumper J4). All models transmitter supply rated @ 25 mA max.
Normal Mode Rejection	Greater than 60 dB at 50/60 Hz
Isolation	4 kV input/output-to-power line 500 V input-to-output or output-to-P+ supply
Overvoltage Category	Installation Overvoltage Category II: Local level with smaller transient overvoltages than Installation Overvoltage Category III.
Environmental	T6 Class operating temperature range Ta = -40 to 60°C T5 Class operating temperature range Ta = -40 to 65°C
Max Power Dissipation	Maximum power dissipation limited to 15.1 W.
Connections	Screw terminals accept 12 to 22 AWG wire

Enclosure	Explosion-proof die cast aluminum with glass window, corrosion resistant epoxy coating, color: blue. NEMA 4X, 7, & 9, IP68. Default conduit connections: Four ¾" NPT threaded conduit openings and two ¾" NPT metal conduit plugs with 12 mm hex key fitting installed. Additional conduit opening configurations may be available; verify quantity and sizes on specific device labeling during installation.
Mounting	Four slotted flanges for wall mounting or NPS 1½" to 2½" or DN 40 to 65 mm pipe mounting. See Mounting Dimensions on page **63**.
Tightening Torque	Screw terminal connectors: 5 lb-in (0.56 Nm)
Overall Dimensions	6.42" x 7.97" x 8.47" (W x H x D) (163 mm x 202 mm x 215 mm)
Approximate Shipping Weight	16.0 lbs (7.26 kg)
Warranty	3 years parts & labor

Dual Process Input

Two Inputs	Two **non-isolated** inputs, each separately field selectable: 0-20, 4-20 mA, ±10 V (0-5, 1-5, 0-10 V), Modbus PV (Slave)
Channels	Channel A, Channel B, Channel C (Math channel)
Programmable Constants	Constant P (Adder): -99.999 to 999.999, default: 0.000 Constant F (Factor): 0.001 to 999.999, default: 1.000

Math Functions

Name	Function	Setting
Addition	(A+B+P)*F	Sunm
Difference	(A-B+P)*F	diF
Absolute diff.	((Abs(A-B))+P)*F	diFAbS
Average	(((A+B)/2)+P)*F	AvG
Multiplication	((A*B)+P)*F	nmulti
Division	((A/B)+P)*F	divide
Max of A or B	((AB-Hi)+P)*F	Hi-Ab
Min of A or B	((AB-Lo)+P)*F	Lo-Ab
Draw	((A/B)-1)*F	drAuw
Weighted avg.	((B-A)*F)+A	uw avg
Ratio	(A/B)*F	ratio
Ratio 2	((B-A)/A)+P)*F	rAt 102
Concentration	(A/(A+B))*F	Concen

Note: The F constant can be any value from 0.001 to 999.999. If the value is less than 1, it will have the same effect as a divider. For example, the average could also be derived by using (A+B)*F, where F = 0.500.

Sequence of Operations for Input Programming	1. Select Input for A and B 2. Set up the engineering units for A, B, and C 3. Set up decimal point for A, B, and C 4. Program A & B 5. Set up the displays for A, B, or C 6. Select the transfer function for A & B (e.g. Linear) 7. Select Math function for Channel C 8. Program constants for Factor (F) and Adder (P). 9. Program cutoff values for A and B
Accuracy	±0.03% of calibrated span ±1 count, square root & programmable exponent accuracy range: 10-100% of calibrated span
Temperature Drift	0.005% of calibrated span/°C max from 0 to 65°C ambient, 0.01% of calibrated span/°C max from -40 to 0°C ambient
Signal Input Conditioning	Linear, square root, programmable exponent, or round horizontal tank volume calculation
Multi-Point Linearization	2 to 32 points for channel A and B
Programmable Exponent	1.0001 to 2.9999
Low-Flow Cutoff	0-999999 (0 disables cutoff function)
Decimal Point	Up to five decimal places or none: dddddd, ddddd, dddd, ddd, dd, or dddddd

Calibration Range	Input Range	Minimum Span Input 1 & Input 2
	4-20 mA	0.15 mA
	±10 V	0.01 V
	An error message will appear if the input 1 and input 2 signals are too close together.	
Input Impedance	Voltage ranges: greater than 500 kΩ Current ranges: 50 - 100 Ω (depending on resettable fuse impedance)	
Input Overload	Current input protected by resettable fuse, 30 VDC max. Fuse resets automatically after fault is removed.	
F4 Digital Input Contacts	3.3 VDC on contact. Connect normally open contacts across F4 to COM.	
F4 Digital Input Logic Levels	Logic High: 3 to 5 VDC Logic Low: 0 to 1.25 VDC	
HART Transparency	Analog input will not interfere with existing HART communications on the wired 4-20 mA signal	

Relays

Rating	4 SPDT (Form C) internal and/or 4 SPST (Form A) external; rated 3 A @ 30 VDC and 125/250 VAC resistive load; 1/14 HP (≈ 50 W) @ 125/250 VAC for inductive loads
Noise Suppression	Noise suppression is recommended for each relay contact switching inductive loads; see page 19 for details.
Deadband	0-100% of span, user programmable
High or Low Alarm	User may program any alarm for high or low trip point. Unused alarm LEDs and relays may be disabled (turn off).
Relay Operation	Automatic (non-latching) Latching (requires manual acknowledge) Sampling (based on time) Pump alternation control (2 to 4 relays) Off (disable unused relays and enable Interlock feature) Manual on/off control mode
Time Delay	0 to 999.9 seconds, on & off relay time delays Programmable and independent for each relay
Fail-Safe Operation	Programmable and independent for each relay. *Note: Relay coil is energized in non-alarm condition.* *In case of power failure, relay will go to alarm state.*
Auto Initialization	When power is applied to the meter, relays will reflect the state of the input to the meter.
Relay Reset	User selectable via front panel buttons, digital inputs, or PC 1. Automatic reset only (non-latching), when the input passes the reset point. 2. Automatic + manual reset at any time (non-latching) 3. Manual reset only, at any time (latching) 4. Manual reset only after alarm condition has cleared (L) *Note: Front panel button or digital input may be assigned to acknowledge relays programmed for manual reset.*

Isolated 4-20 mA Transmitter Output

Output Source	Process channel A, B, or C, max or min for channel A, B, or highest or lowest max or min of A and B, set points 1-4, Modbus input, or manual control mode
Scaling Range	1.000 to 23.000 mA for any display range
Calibration	Factory calibrated: 4.000 to 20.000 = 4-20 mA output
Analog Out Programming	23.000 mA maximum for all parameters: Overrange, underrange, max, min, and break
Accuracy	± 0.1% of span ± 0.004 mA
Temperature Drift	0.4 µA/°C max from 0 to 65°C ambient, 0.8 µA/°C max from -40 to 0°C ambient *Note: Analog output drift is separate from input drift.*
Isolated Transmitter Power Supply	Terminals I+ & R: 24 VDC ± 10%. May be used to power the 4-20 mA output or other devices. Refer to Figure 3 on page 14 and Figure 16 on page 20. All models @ 25 mA max.
External Loop Power Supply	35 VDC maximum

	Power supply	Minimum	Maximum
Output Loop Resistance	24 VDC	10 Ω	700 Ω
	35 VDC (external)	100 Ω	1200 Ω

Serial Communications

Compatibility	EIA-485
Connectors	Removable screw terminal connector
Max Distance	3,937' (1,200 m) max
Status Indication	Separate LEDs for Power (P), Transmit (TX), and Receive (RX)
Slave Id	1 – 247 (Meter address)
Baud Rate	300 – 19,200 bps
Transmit Time Delay	Programmable between 0 and 199 ms
Data	8 bit (1 start bit, 1 or 2 stop bits)
Parity	Even, Odd, or None with 1 or 2 stop bits
Byte-To-Byte Timeout	0.01 – 2.54 second
Turn Around Delay	Less than 2 ms (fixed)

Note: Refer to the PROVU® Modbus Register Tables located at www.predig.com for details.

Digital Inputs & Outputs

Channels	4 digital inputs & 4 digital outputs per module
Digital Input Logic High	3 to 5 VDC
Digital Input Logic Low	0 to 1.25 VDC
Digital Output Logic High	3.1 to 3.3 VDC
Digital Output Logic Low	0 to 0.4 VDC
Source Current	10 mA maximum output current
Sink Current	1.5 mA minimum input current
+5 V Terminal	To be used as pull-up for digital inputs only. Connect normally open pushbuttons across +5 V & DI 1-4. **WARNING** *DO NOT use +5 V terminal (pin 1) to power external devices.*
Function Assignment	The on-board digital inputs (1-4) are designed to mimic the behavior of the front panel buttons (Menu, F1, F2, & F3). If you wish to change their behavior, re-assign F1-F3 to the desired function, then change the corresponding digital input to match.

MeterView Pro

System Requirements	Microsoft® Windows® XP/Vista/7/8/10
Communications	USB 2.0 (Standard USB A to Micro USB B)
Configuration	Configure device settings one at a time

Product Ratings and Approvals;

FM	Enclosure: Type 4X; IP66 Class I, Division 1, Groups B, C, D Class II, Division 1, Groups E, F, G Class III, Division 1, T5/T6 Class I, Zone 1, AEx d, IIC Gb T5/T6 Zone 21, AEx tb IIIC T90°C; Ta -40°C to +65°C T6 Ta = -40°C to +60°C; T5 Ta = -40°C to +65°C Certificate Number: 3047283
CSA	Class I, Division 1, Groups B, C, D Class II, Division 1, Groups E, F, G Class III, Division 1 Class I Zone 1 Ex d IIC Zone 21 Ex tb IIIC T90°C -40°C < Tamb. < +60° C; Temperature Code T6 -40°C < Tamb. < +65° C; Temperature Code T5 Enclosure Type 4X & IP66 Certificate Number: 2531731
ATEX	Ex II 2 G D Ex d IIC T* Gb Ex tb IIIC T90°C Db IP68 Ta = -40°C to +*°C *T6 = -40°C to +60°C *T5 = -40°C to +65°C Certificate number: Sira 12ATEX1182
IECEx	Ex d IIC T* Gb Ex tb IIIC T90°C Db IP68 Ta = -40°C to +*°C *T6 = -40°C to +60°C *T5 = -40°C to +65°C Certificate Number: IECEx SIR 12.0073

Special Conditions for Safe Use:
Use suitably certified and dimensioned cable entry device and/or plug. The equipment shall be installed such that the supply cable is protected from mechanical damage. The cable shall not be subjected to tension or torque. If the cable is to be terminated within an explosive atmosphere, then appropriate protection of the free end of the cable shall be provided. Cable must be suitable for 90°C.

Year of Construction
This information is contained within the serial number with the first four digits representing the year and month in the YYMM format.

For European Community: The ProtEX-MAX must be installed in accordance with the ATEX directive 94/9/EC, and the product certificate Sira 12ATEX1182.

Compliance Information

Safety

UL & c-UL Listed	USA & Canada UL 508 Industrial Control Equipment
UL File Number	E160849
Front Panel	UL Type 4X, NEMA 4X, IP65; panel gasket provided
Low Voltage Directive	EN 61010-1 Safety requirements for measurement, control, and laboratory use

Electromagnetic Compatibility

Emissions	EN 55022 Class A ITE emissions requirements
Radiated Emissions	Class A
AC Mains Conducted Emissions	Class A
Immunity	EN 61326-1 Measurement, control, and laboratory equipment EN 61000-6-2 EMC heavy industrial generic immunity standard
RFI - Amplitude Modulated	80 -1000 MHz 10 V/m 80% AM (1 kHz) 1.4 - 2.0 GHz 3 V/m 80% AM (1 kHz) 2.0 - 2.7 GHz 1 V/m 80% AM (1 kHz)
Electrical Fast Transients	±2kV AC mains, ±1kV other
Electrostatic Discharge	±4kV contact, ±8kV air
RFI - Conducted	10V, 0.15-80 MHz, 1kHz 80% AM
AC Surge	±2kV Common, ±1kV Differential
Surge	1KV (CM)
Power-Frequency Magnetic Field	30 A/m 70%V for 0.5 period
Voltage Dips	40%V for 5 & 50 periods 70%V for 25 periods
Voltage Interruptions	<5%V for 250 periods

Note:

Testing was conducted on PD6000 Series meters installed through the covers of grounded metal enclosures with cable shields grounded at the point of entry representing installations designed to optimize EMC performance.

Declaration of Conformity available at www.predig.com

EU Declaration of Conformity

EU Declaration of Conformity is available in the Documentation CD provided with the product under the **EU DoC** menu.

Safety Information

WARNINGS

- Read complete instructions prior to installation and operation of the instrument.
- Installation and service should be performed only by trained service personnel. Service requiring replacement of internal sub-components must be performed at the factory.
- Disconnect from supply before opening enclosure. Keep cover tight while circuits are alive. Conduit seals must be installed within 18" (450mm) of the enclosure or within 2" (50mm) for Zone installations.
- Verify that the operating atmosphere of the instrument is consistent with the appropriate hazardous locations certifications.
- If the instrument is installed in a high voltage environment and a fault or installation error occurs, high voltage may be present on any lead
- Read all product labels completely and follow all instructions and requirements listed on the labels for installation or service.

Installation

Install in accordance with applicable local and national regulations (e.g. NEC).

For Installation in USA: The ProtEX-MAX must be installed in accordance with the National Electrical Code (NEC) NFPA 70.

For Installation in Canada: The ProtEX-MAX must be installed in accordance with the Canadian Electrical Code CSA 22.1. All power supplies below 36 V and input circuits must be derived from a CSA Approved Class 2 source.

For European Community: The ProtEX-MAX must be installed in accordance with the ATEX directive 94/9/EC and the product certificate Sira 12ATEX1182.

WARNING Disconnect from supply before opening enclosure. Keep cover tight while circuits are alive. Conduit seals must be installed within 18" (450mm) of the enclosure or within 2" (50mm) for Zone installations.

Wiring connectors are accessed by opening the enclosure. To access electrical connectors, remove the 2 captive screws and then remove the electronics module. Connectors are on the rear of the electronics module.

Unpacking

Remove the instrument from packing box. Inspect the packaging and contents for damage. Report damages, if any, to the carrier.

If any part is missing or the instrument malfunctions, please contact your supplier or the factory for assistance.

Pre-Installed Conduit/Stopping Plug

The PD8-6000 is supplied with two pre-installed conduit plugs for installations that do not require the use of all conduit entries. The conduit/stopping plugs include an internal 12mm hexagonal socket recess for removal. The pre-installed plugs and their installation are included in the hazardous area approvals for the PD8 Series enclosure.

WARNING In hazardous areas, conduit and conduit/stopping plugs require the application of non-setting (solvent free) thread sealant. It is critical that all relevant hazardous area guidelines be followed for the installation or replacement of conduit or plugs.

Mounting

The ProtEX-MAX has four slotted mounting flanges that should be used for pipe mounting or wall mounting. Refer to *Mounting Dimensions*, page 63 for details.

WARNING Do not attempt to loosen or remove flange bolts while the instrument is in service.

Cover Jam Screw

The cover jam screw should be properly installed once the instrument has been wired and tested in a safe environment. The cover jam screw is intended to prevent the removal of the instrument cover in a flameproof environment without the use of tools. Using a M2 hex wrench, turn the screw clockwise until the screw contacts the aluminum enclosure. Turn the screw an additional 1/4 to 1/2 turn to secure the cover. Caution: Excess torque may damage the threads and/or wrench.

Transmitter Supply Voltage Selection (P+, P-)

All meters, including models equipped with the 12-24 VDC power option, are shipped from the factory configured to provide 24 VDC power for the transmitter or sensor.

If the transmitter requires 5 or 10 VDC excitation, the internal jumper J4 must be configured accordingly.

To access the voltage selection jumper:

1. Remove all the wiring connectors.
2. Unscrew the back cover.
3. Slide out the back cover by about 1 inch.
4. Configure the J4 jumper, located behind the input signal connector, for the desired excitation voltage as shown.

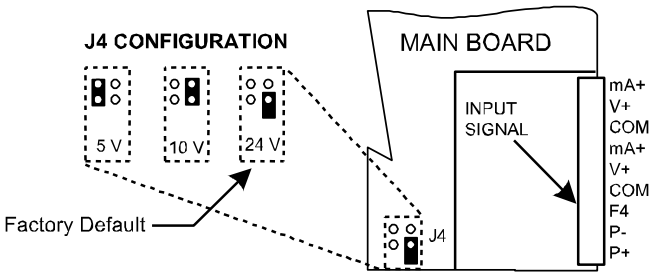

Figure 1. Transmitter Supply Voltage Selection

Connections

WARNINGS

- **Static electricity can damage sensitive components.**
- **Observe safe handling precautions for static-sensitive components.**
- **Use proper grounding procedures/codes.**
- **If the instrument is installed in a high voltage environment and a fault or installation error occurs, high voltage may be present on any lead or terminal.**
- **Follow all fusing and wiring precautions requirements for the instrument integrated to the PD8 Series model number being connected.**

To access the connectors, remove the enclosure cover and unscrew the two captive screws that fasten the electronics module. Signal connections are made to de-pluggable connectors on the back of the electronics module.

Some connectors may be provided already connected. These connections are required for proper operation of the ProtEX-MAX, and should not be removed unless instructed to by this manual.

Wires marked as being used for testing purposes should be removed.

Grounding connections are made to the two ground screws provided on the base – one internal and one external.

After all connections have been completed and verified, apply power to the unit.

Required & Factory Wired Connection

The ProtEX-MAX comes with a pre-wired connection. This connection is detailed below, and must be maintained in order for the instrument to function properly.

WARNING

Observe all safety regulations. Electrical wiring should be performed in accordance with all agency requirements and applicable national, state, and local codes to prevent damage to the meter and ensure personnel safety.

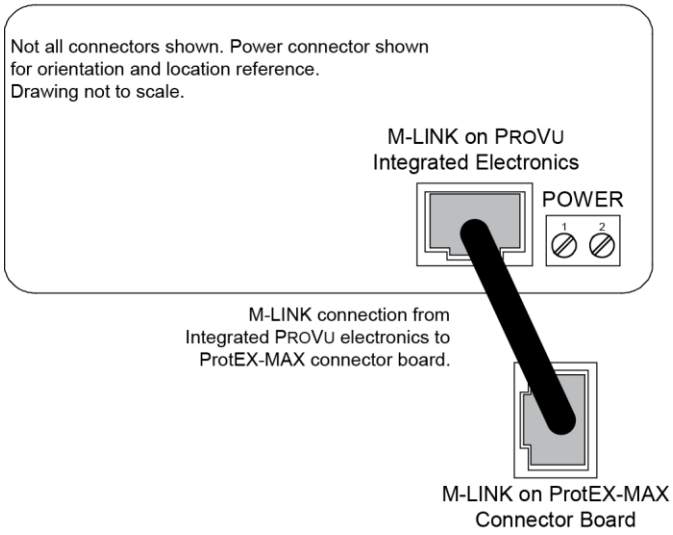

Figure 2: Integrated ProVu Required Connections

Connectors Labeling

The connectors' label, affixed to the meter, shows the location of all connectors available with requested configuration.

Warning!	***Do not connect any equipment other than Precision Digital's expansion modules, cables, or meters to the RJ45 M-LINK connector. Otherwise damage will occur to the equipment and the meter.***

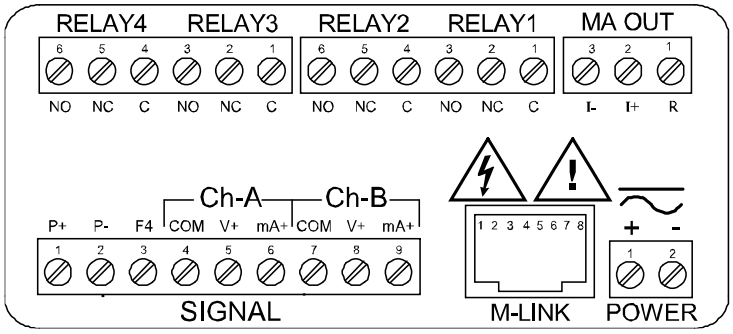

Figure 3. Connector Labeling for Fully Loaded PD6060

Power Connections

Power connections are made to a two-terminal connector labeled POWER on Figure 3. The meter will operate regardless of DC polarity connection. The + and - symbols are only a suggested wiring convention.

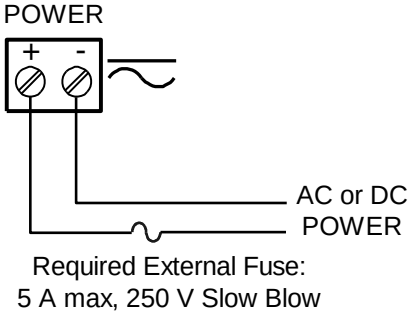

Figure 4. Power Connections

Signal Connections

Signal connections are made to a nine-terminal connector labeled SIGNAL on Figure 3. The COM (common) terminals are the return for the 4-20 mA and the ±10 V input signals. The two COM terminals connect to the same common return, and are not isolated.

Current and Voltage Connections

The following figures show examples of current and voltage connections.

There are no switches or jumpers to set up for current and voltage inputs. Setup and programming is performed through the front panel buttons.

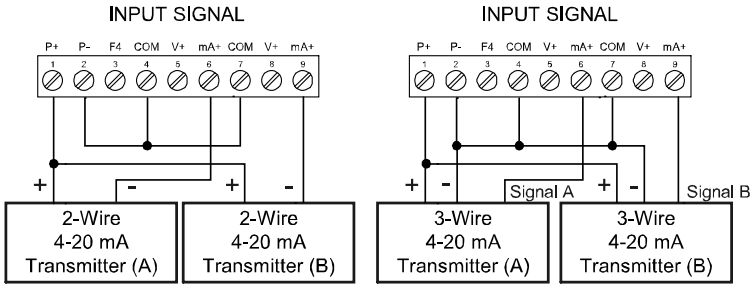

Figure 5. Transmitters Powered by Internal Supply

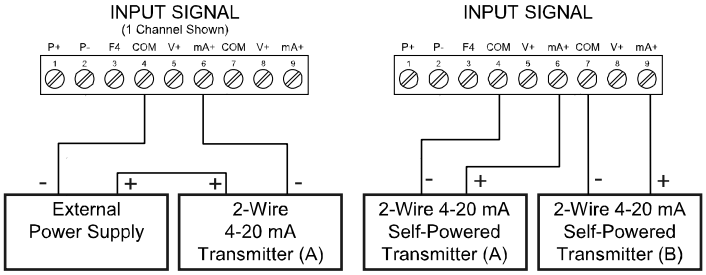

Figure 6. Transmitter Powered by Ext. Supply or Self-Powered

The current input is protected against current overload by a resettable fuse. The display may or may not show a fault condition depending on the nature of the overload.

The fuse limits the current to a safe level when it detects a fault condition, and automatically resets itself when the fault condition is removed.

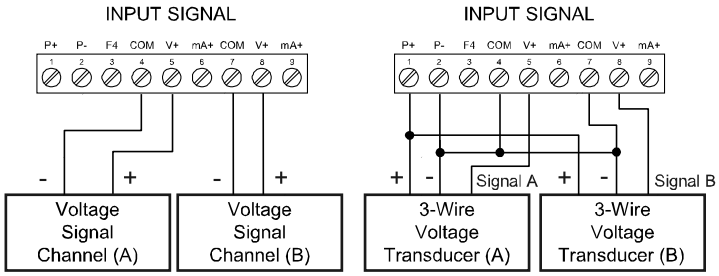

Figure 7. Voltage Input Connections

The meter is capable of accepting any voltage from -10 VDC to +10 VDC.

Serial Communications Connections

The ProtEX-MAX has a 5 position terminal block for connecting RS-485 serial devices.

Figure 8 details the wiring connections from the ProtEX-MAX to an RS-485 serial converter (such as the PDA7485 or PDA8485) for a four-wire network.

ProtEX-MAX to RS-485 Serial Converter Connections	
RS-485 Serial Converter	ProtEX-MAX RS-485 Connections
⏚	⏚
$\overline{DO}$	$\overline{DI}$
DO	DI
$\overline{DI}$	$\overline{DO}$
DI	DO

Figure 8: ProtEX-MAX Connections to a Serial Converter

The ProtEX-MAX has three diagnostic LEDs: a Power (P) LED to show when the module is powered properly, a Transmit Data (TX) LED to show when the module is being transmitted to by the PC side, and a Receive Data (RX) LED to show when the module is sending data to a receiving device.

The following diagrams detail how to connect the RS-485 serial communications from the ProtEX-MAX to a RS-485/RS-232 serial converter (PDA7485) in four wire and two wire configurations.

Three Wire Connections

In order to wire the 5 pins for use as a 3-wire half-duplex RS-485 connection, it is necessary to create a jumper connection between DI – DO and DI- – DO- as shown below.

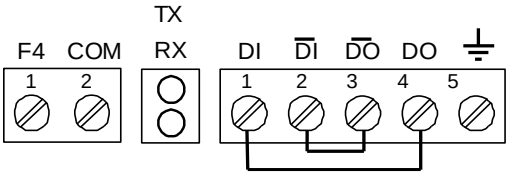

Figure 9. Three-Wire RS485 Connection

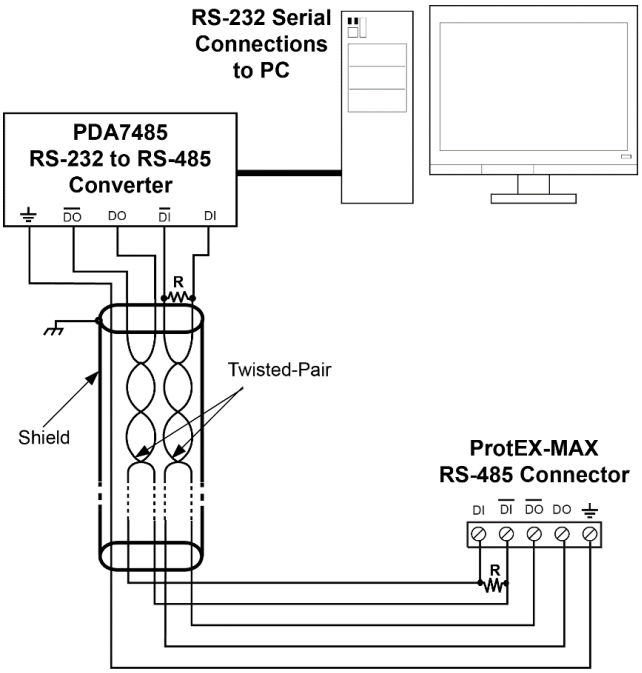

Figure 10: RS-485 Wiring

Notes:

1. Termination resistors are optional and values depend on the cable length and characteristic impedance. Consult the cable manufacturer for recommendations.
2. Refer to RS-232 to RS-485 Converter documentation for further details.
3. Use shielded cable, twisted-pairs plus ground. Connect ground shield only at one location.

WARNING	Observe all safety regulations. Electrical wiring should be performed in accordance with all agency requirements and applicable national, state, and local codes to prevent damage to the meter and ensure personnel safety.

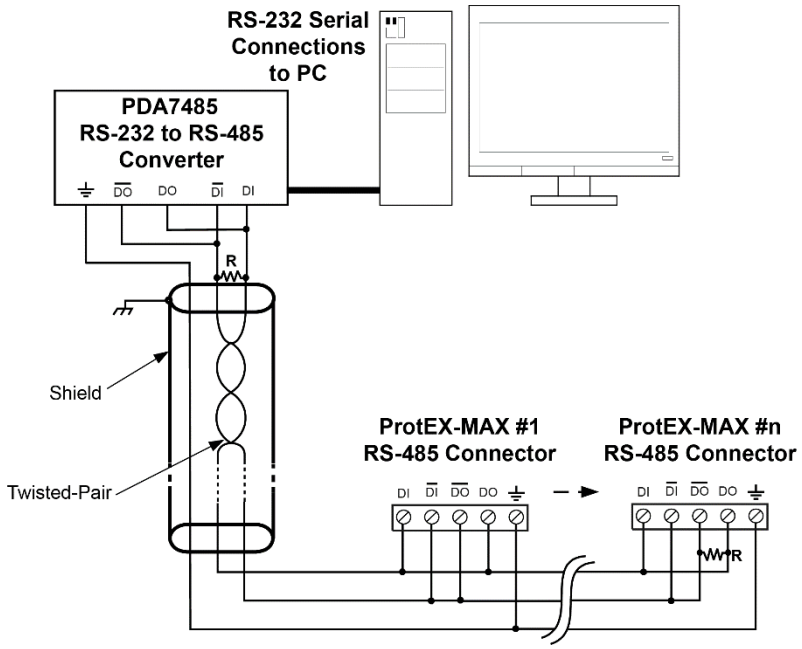

Figure 11: RS-485 Two-Wire Multi-Drop Wiring

Notes:

1. Termination resistors are optional and values depend on the cable length and characteristic impedance. Consult the cable manufacturer for recommendations.
2. Refer to RS-232 to RS-485 Converter documentation for further details.
3. Use shielded cable, twisted-pair plus ground. Connect ground shield only at one location.

WARNING Observe all safety regulations. Electrical wiring should be performed in accordance with all agency requirements and applicable national, state, and local codes to prevent damage to the meter and ensure personnel safety.

When using more than one instrument in a multi-drop or multi-point mode, each meter must be provided with its own unique address. See Modbus RTU Serial Communications on page 48.

Using ProVu Serial Adapters

NOTICE ProVu expansion modules and serial adapters are not included in the hazardous area approvals of the ProtEX-MAX. The PDA1232 and PDA8008 may be used only while the ProtEX-MAX is in a safe area, and will disable some features while installed.

ProVu expansion modules and serial adapters are not recommended for use with the ProtEX-MAX. It is recommended that any serial protocol conversion required on the RS-485 communications connection be performed using a PDA7485 RS-232 to RS-485 or PDA8485 USB to RS-485 serial converter located in a safe area.

Relay Connections

Relay connections are made to two six-terminal connectors labeled RELAY1 – RELAY4 on Figure 3. Each relay's C terminal is common only to the normally open (NO) and normally closed (NC) contacts of the corresponding relay. The relays' C terminals should not be confused with the COM (common) terminal of the INPUT SIGNAL connector.

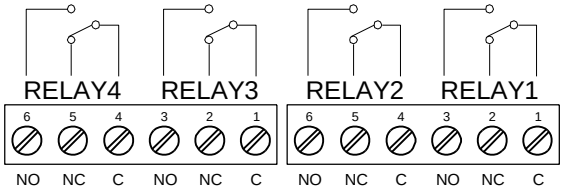

Figure 12. Relay Connections

Switching Inductive Loads

The use of suppressors (snubbers) is strongly recommended when switching inductive loads to prevent disrupting the microprocessor's operation. The suppressors also prolong the life of the relay contacts. Suppression can be obtained with resistor-capacitor (RC) networks assembled by the user or purchased as complete assemblies. Refer to the following circuits for RC network assembly and installation:

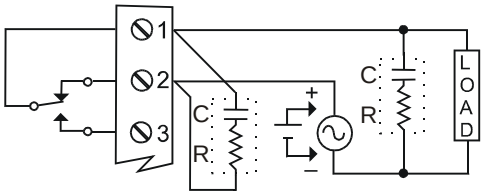

Figure 13. AC and DC Loads Protection

Choose R and C as follows:

R: 0.5 to 1 Ω for each volt across the contacts

C: 0.5 to 1 µF for each amp through closed contacts

Notes:

1. *Use capacitors rated for 250 VAC.*
2. *RC networks may affect load release time of solenoid loads. Check to confirm proper operation.*
3. *Install the RC network at the meter's relay screw terminals. An RC network may also be installed across the load. Experiment for best results.*

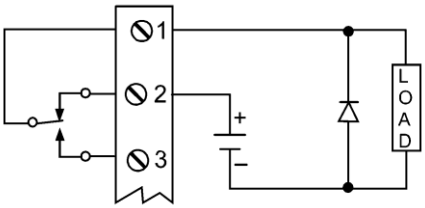

Use a diode with a reverse breakdown voltage two to three times the circuit voltage and forward current at least as large as the load current.

Figure 14. Low Voltage DC Loads Protection

RC Networks Available from Precision Digital

RC networks are available from Precision Digital and should be applied to each relay contact switching an inductive load. Part number: PDX6901.

Note: Relays are de-rated to 1/14th HP (50 watts) with an inductive load.

F4 Digital Input Connections

A digital input, F4, is standard on the meter. This digital input connected with a normally open closure across F4 and COM, or with an active low signal applied to F4.

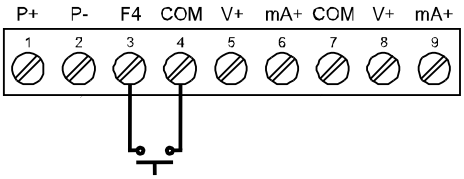

Figure 15. F4 Digital Input Connections

4-20 mA Output Connections

Connections for the 4-20 mA transmitter output are made to the connector terminals labeled MA OUT. The 4-20 mA output may be powered internally or from an external power supply.

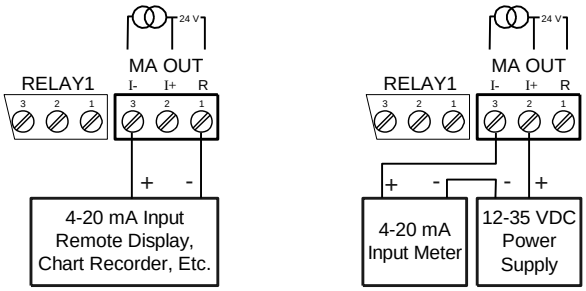

Figure 16. 4-20 mA Output Connections

Analog Output Transmitter Power Supply

The internal 24 VDC power supply powering the analog output may be used to power other devices, if the analog output is not used. The I+ terminal is the +24 V and the R terminal is the return.

Interlock Relay Feature

As the name implies, the interlock relay feature reassigns one, or more, alarm/control relays for use as interlock relay(s). Interlock contact(s) are wired to digital input(s) and trigger the interlock relay. This feature is enabled by configuring the relay, and relative digital input(s) (see page 43). In one example, dry interlock contacts are connected in series to one digital input which will be used to force on (energize) the assigned interlock power relay when all interlock contacts are closed (safe). The interlock relay front panel LED flashes when locked out. The interlock relay would be wired in-series with the load (N/O contact). See below.

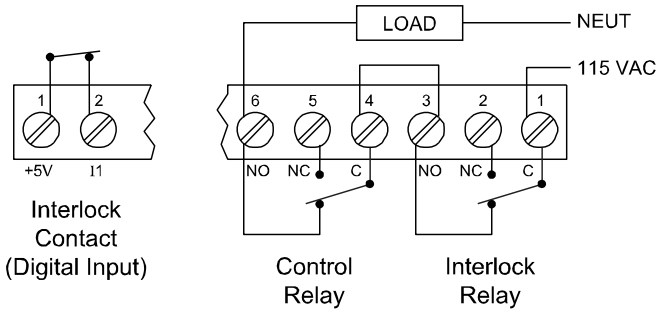

Figure 17. Interlock Connections

Digital I/O Connections

The ProtEX-MAX has a 10 position terminal block for connecting digital inputs and outputs.

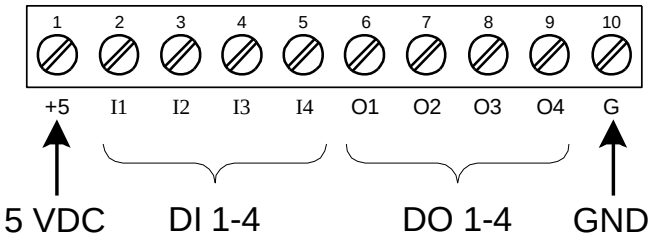

Figure 18: Digital I/O Connections

NOTICE	The onboard digital inputs (1-4) are configured at the factory to function identically to the front panel pushbuttons (Menu, F1, F2, & F3) in order to work with the SafeTouch buttons. Changing the programming of the digital inputs will affect the function of the SafeTouch buttons. If you wish to change the behavior of the digital inputs, re-assign F1-F3 to the desired function, then change the corresponding digital input to match.
WARNING	Observe all safety regulations. Electrical wiring should be performed in accordance with all agency requirements and applicable national, state, and local codes to prevent damage to the meter and ensure personnel safety.

External Switch Contacts

The ProtEX-MAX includes 4 digital inputs. These digital inputs are preconfigured at the factory to function as external contacts to duplicate the front button functions of the instrument. The factory configuration uses the following corresponding digital input terminals for external switch contacts.

Digital Input Connection	Factory Default Function
I1	MENU
I2	RIGHT arrow
I3	UP arrow
I4	ENTER arrow

See Digital Inputs & Outputs in the Specification on page 8 for details on the digital inputs.

NOTICE	The digital inputs are configured at the factory to function identically to the front panel pushbuttons in order to work with the SafeTouch buttons. Changing the programming of the digital inputs will affect the function of the SafeTouch buttons.

Setup and Programming

The meter is factory calibrated prior to shipment to read in milliamps and volts depending on the input selection. The calibration equipment is traceable to NIST

Overview

There are no jumpers to set for the meter input selection.

Setup and programming may be done through the infrared through-glass SafeTouch buttons, or using the mechanical buttons when uncovered. There is a slide switch located on the connector board. This is used to enable or disable SafeTouch Buttons.

After power and input signal connections have been completed and verified, apply power to the meter.

SafeTouch® Buttons

The ProtEX-MAX is equipped with four sensors that operate as through-glass buttons so that it can be programmed and operated without removing the cover (and exposing the electronics) in a hazardous area.

These buttons can be disabled for security by selecting DISABLE on the switch labeled NO-CONTACT BUTTONS located on the connector board.

To actuate a button, press one finger to the glass directly over the marked button area. Then retract finger more than three inches from the glass before pressing the next button. When the cover is removed, the four mechanical buttons located next to the sensors are used. The sensors are disabled when a mechanical button is pressed and will automatically be re-enabled after 60 seconds of inactivity.

The SafeTouch Buttons are designed to filter normal levels of ambient interference and to protect against false triggering, however, it is recommended that the SafeTouch Buttons be disabled (slide switch to LOCK) if there is an infrared interference source in line-of-sight to the display.

The SafeTouch Buttons are configured by default to duplicate the function of the front panel mechanical pushbuttons associated with the integrated meter. The symbols by each SafeTouch button correspond to a mechanical button as shown in the table on the next page.

SafeTouch Button Tips:

- To the extent possible, install the display facing away from sunlight, windows, reflective objects and any sources of infrared interference.
- Keep the glass window clean.
- Tighten the cover securely.
- Use a password to prevent tampering.

WARNING Take caution when cleaning the window glass as it may result in unintentional SafeTouch button events. Only clean the ProtEX-MAX when the system is safely shut down, and inspect the ProtEX-MAX for proper configuration prior to system restart.

Front Buttons and Status LED Indicators

Button Symbol	Description
MENU	**Menu**
F1	**Right arrow/F1**
F2	**Up arrow/F2**
F3	**Enter/F3**

Notes:
F4-8 are digital inputs.

LED	Status
1-8	Alarm 1-8 indicator
1-8 M	Flashing: Relay in manual control mode
A B C	Channel displayed Flashing: Tare
1-4	Flashing: Relay interlock switch open

Note:
LEDs for relays in manual mode flash with the "M" LED every 10 seconds.

- Press the Menu button to enter or exit the Programming Mode at any time.
- Press the Right arrow button to move to the next digit during digit or decimal point programming.
- Press or hold the Up arrow button to scroll through the menus, decimal point, or to increment the value of a digit.
- Press the Enter button to access a menu or to accept a setting.
- Press and hold the Menu button for three seconds to access the advanced features of the meter.

MeterView® Pro Software

The meter can also be programmed using the PC-based MeterView Pro software included with the meter. This software can be installed on any Microsoft® Windows® (XP/Vista/7/8/10) computer by connecting the meter's onboard USB. The meter is powered by the USB connection, so there is no need to wire anything prior to programming the meter, though USB is intended only for meter configuration.

MeterView Pro Installation

1. Connect one end of the provided USB cable to the internal electronics module and the other end to the computer. The computer will automatically install the driver software it needs to talk to the meter. O**nly one meter may be connected at a time. Attaching multiple meters will cause a conflict with the meter software.**

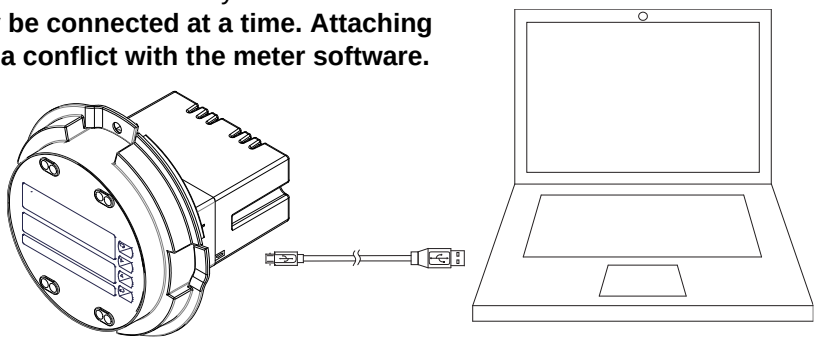

2. Once the driver is installed, an AutoPlay dialog should appear for the drive "MAINSTAL." Click "Open folder to view files." If the computer does not display an AutoPlay dialog for the drive "MAINSTAL," you should open My Computer and double-click on the drive labeled "MAINSTAL."

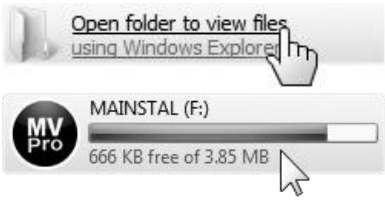

3. Double-click on the file named "MAStart." The program will open a few windows and install two programs on your computer. Simply follow the onscreen instructions until you see one of the dialogs below. If you receive a "User Account Control" warning, click "Yes."

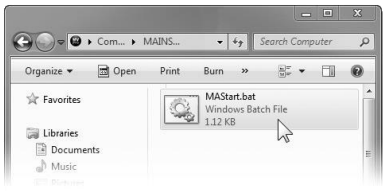

4. If there is an update available, click the "Update" button to install the new version. Otherwise, click "Configure" to begin programming your meter.

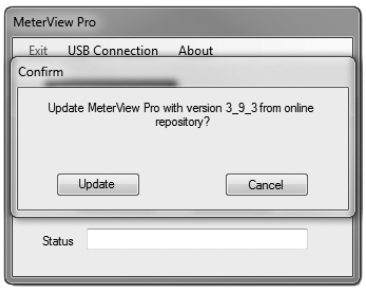

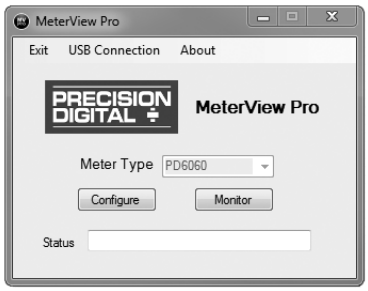

Note: If you decide to update your MeterView Pro software, once the installation has completed, you will be asked if you want to update the setup files located on the meter itself. This way, you will always have the most current version on the meter for future installs.	
Warning!	***Do not unplug the meter while the new installation files are being written to it. The meter will display uwrite during the process and you will receive an onscreen notification once the process is complete.***

Data logging for one meter at a time is available with MeterView Pro software. More advanced data acquisition may be accomplished by using any Modbus RTU compliant software. Additional information regarding configuration and monitoring of the meter using MeterView Pro software is available online. Go to **www.predig.com/meterview-pro**.

Display Functions & Messages

The following table shows the main menu functions and messages in the order they appear in the menu.

Display	Parameter	Action/Setting Description
SEtuP	*Setup*	Enter *Setup* menu
InPut	*Input*	Enter *Input* selection menu
Ch-A*	*Input*	Set input type for channel A (*or B)
mA	*4-20 mA*	Set meter for 4-20 mA input
UoLt	*0-10 VDC*	Set meter for ±10 VDC input
unitS	*Unit*	Select the display units/tags
Ch-A*	*Unit*	Set unit or tag for channel A (*or B or C)
dEc Pt	*Decimal point*	Set decimal point
Ch-A*	*Decimal point*	Set decimal point for channel A (*or B or C)
ProG	*Program*	Enter the *Program* menu
InCAL	*Input calibration*	Enter the *Input Calibration* menu
Ch-A*	*Input A*	Set input type for channel A (*or B)
SCAL A	*Scale A*	Enter the *Scale* menu for channel A
SCAL b	*Scale B*	Enter the *Scale* menu for channel B
CAL A	*Calibrate A*	Enter the *Calibration* menu for channel A
CAL b	*Calibrate B*	Enter the *Calibration* menu for channel B
InP 1	*Input 1*	Calibrate input 1 signal or program input 1 value
dis 1	*Display 1*	Program display 1 value
InP 2	*Input 2*	Calibrate input 2 signal or program input 2 value (up to 32 points)
dis 2	*Display 2*	Program display 2 value (up to 32 points)
Error	*Error*	Error, calibration not successful, check signal or programmed value
dSPLAY	*Display*	Enter the *Display* menu
LinE 1	*Line 1*	Assign line 1 parameter
LinE 2	*Line 2*	Assign line 2 parameter
d Ch-A	*Display Ch-A*	Assign display to channel A
d Ch-b	*Display Ch-B*	Assign display to channel B
d Ch-C	*Display Ch-C*	Assign display to channel C (math)

Display	Parameter	Action/Setting Description
d Ab	*Display AB*	Alternate display of channel A & B
d AC	*Display AC*	Alternate display of channel A & C
d bC	*Display BC*	Alternate display of channel B & C
d AbC	*Display ABC*	Alternate display of channel A, B, & C
d SEt 1*	*Display set 1**	Displays relay 1(*through 8) set point.
d Hi-A	*Display high A*	Display high value of channel A
d Lo-A	*Display low A*	Display low value of channel A
d HL-A	*Display hi/low A*	Alternate between high/low value of channel A
d Hi-b	*Display high B*	Display high value of channel B
d Lo-b	*Display low B*	Display low value of channel B
d HL-b	*Display high/low B*	Alternate between high/low value of channel B
d Hi-C	*Display high C*	Display high value of channel C
d Lo-C	*Display low C*	Display low value of channel C
d HL-C	*Display high/low C*	Alternate between high/low value of channel C
d A-u	*Display A and units/tags*	Alternate display of channel A and the unit/tag
d b-u	*Display B and units/tags*	Alternate display of channel B and the unit/tag
d C-u	*Display B and units/tags*	Alternate display of channel C and the unit/tag
A GroS	*Display A gross*	Display input channel A gross (no tare)
A nt-G	*Display A net and gross*	Alternate display of channel A net (tare) and gross (no tare)
b GroS	*Display B gross*	Display input channel B gross (no tare)
b nt-G	*Display B net and gross*	Alternate display of channel B net (tare) and gross (no tare)

Display	Parameter	Action/Setting Description
m bus	*Display Modbus*	Display Modbus input register
d oFF	*Display off*	Display blank (line 2)
d unit	*Display unit*	Display line 1 channel units
d- Inty	*Display intensity*	Set display intensity level from 1 to 8
rELAY	*Relay*	Enter the *Relay* menu
ASS iGn	*Assignment*	Assign relays to channels or Modbus
AS iGn 1	*Assign 1*	Relay 1 assignment
Ch-A*	*Channel A**	Assign relay to channel A (*or B or C)
m bus	*Modbus*	Assign relay to Modbus register
rLY 1	*Relay 1*	Relay 1 setup
Act 1	*Action 1*	Set relay 1 action
Auto	*Automatic*	Set relay for automatic reset
A-nman	*Auto-manual*	Set relay for auto or manual reset any time
LAtCH	*Latching*	Set relay for latching operation
Lt-CLr	*Latching-cleared*	Set relay for latching operation with manual reset only after alarm condition has cleared
ALtErn	*Alternate*	Set relay for pump alternation control
SAm PL	*Sample*	Set relay for sample time trigger control
OFF	*Off*	Turn relay off
FA iLSF	*Fail-safe*	Enter *Fail-safe* menu
FLS 1*	*Fail-safe 1*	Set relay 1 (*through 8) fail-safe operation
on	*On*	Enable fail-safe operation
oFF	*Off*	Disable fail-safe operation
dELAY	*Delay*	Enter relay *Time Delay* menu
dLY 1	*Delay 1*	Enter relay 1 time delay setup
On 1	*On 1*	Set relay 1 On time delay
OFF 1	*Off 1*	Set relay 1 Off time delay
dLY 2	*Delay 2*	Enter relays 2-4 time delay setup

Display	Parameter	Action/Setting Description
brEAK	*Loop break*	Set relay condition if loop break detected
iGnorE	*Ignore*	Ignore loop break condition (Processed as a low signal condition)
On	*On*	Relay goes to alarm condition when loop break detected
OFF	*Off*	Relay goes to non-alarm condition when loop break detected
Aout	*Analog output*	Enter the *Analog output* scaling menu
AOut 1*	*Aout channel*	Analog Output source channel (*1-3)
d iS 1	*Display 1*	Program display 1 value
Out 1	*Output 1*	Program output 1 value (e.g. 4.000 mA)
d iS 2	*Display 2*	Program display 2 value
Out 2	*Output 2*	Program output 2 value (e.g. 20.000 mA)
rESEt	*Reset*	Press Enter to access the *Reset* menu
rSt Hi	*Reset high*	Press Enter to reset max display
rSt Lo	*Reset low*	Press Enter to reset min display
rSt HL	*Reset high & low*	Press Enter to reset max & min displays
rSt tr	*Reset tare*	Press Enter to reset (cancel) tare
ContrL	*Control*	Enter *Control* menu
Auto	*Automatic*	Press Enter to set meter for automatic operation
m An	*Manual*	Press Enter to manually control relays or analog output operation
PASS	*Password*	Enter the *Password* menu
PASS 1*	*Password 1**	Set or enter Password 1 (*through 3)
unLoc	*Unlocked*	Program password to lock meter
Locd	*Locked*	Enter password to unlock meter
999999 -99999	*Flashing*	Over/under range condition

Main Menu

The main menu consists of the most commonly used functions: *Reset, Control, Setup*, and *Password*.

- Press Menu button to enter Programming Mode then press the Up arrow button to scroll main menu.
- Press Menu, at any time, to exit and return to Run Mode. Changes made to settings prior to pressing Enter are not saved.
- Changes to the settings are saved to memory only after pressing Enter.
- The display moves to the next menu every time a setting is accepted by pressing Enter.

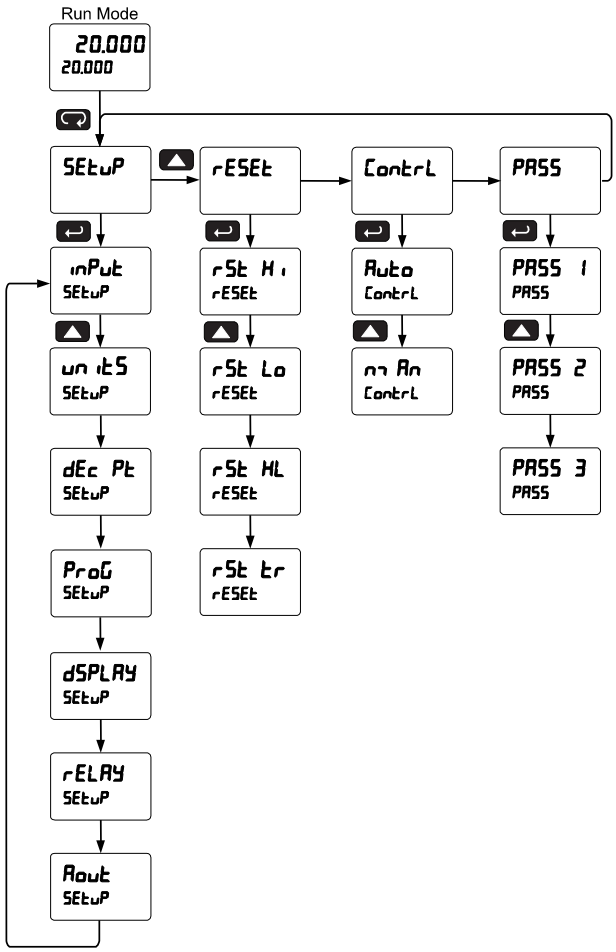

Setting Numeric Values

The numeric values are set using the Right and Up arrow buttons. Press Right arrow to select next digit and Up arrow to increment digit value. The digit being changed is displayed brighter than the rest. Press and hold Up to auto-increment the display value. If negative numbers are allowed, the first digit position will include a negative symbol (-) after the 9.

Press the Enter button, at any time, to accept a setting or Menu button to exit without saving changes.

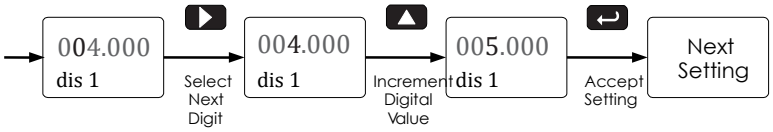

Setting Up the Meter (SEtuP)

The *Setup* menu is used to select:

1. Input signal the meter will accept for channel A and channel B
2. Units for A, B, and C
3. Decimal point position for A, B, and C
4. Program the meter using the Scale or Calibrate functions
5. Display parameter and intensity
6. Relay assignment and operation
7. 4-20 mA analog output scaling

Press the Menu button to exit at any time.

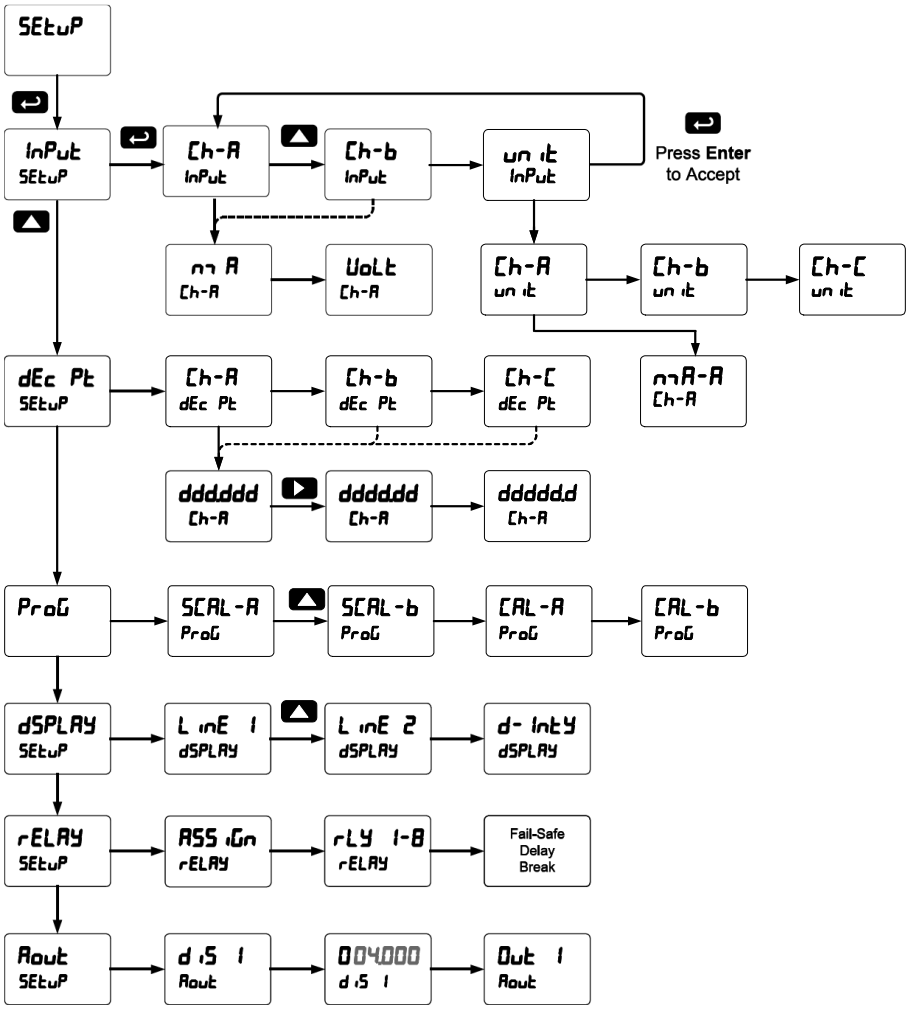

Setting the Input Signal (InPut)

Enter the *Input* menu to set up the meter to display current (mA) or voltage (VoLt) inputs for channel A and channel B.

The current input is capable of accepting any signal from 0 to 20 mA. Select current input to accept 0-20 mA or 4-20 mA signals.

The voltage input is capable of accepting any signal from -10 to +10 VDC. Select voltage input to accept 0-5, 1-5, 0-10, or ±10 VDC signals.

Channel C is the Math Function calculation, which is set up in the Advanced Features menu.

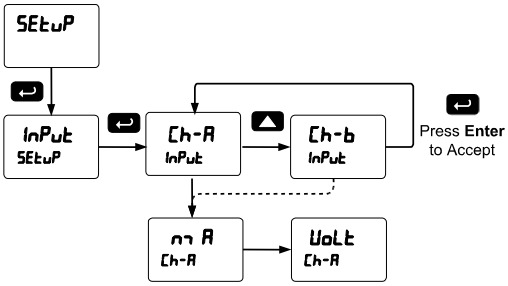

Setting the Decimal Point (dEc Pt)

The decimal point may be set with up to five decimal places or with no decimal point at all.

Pressing the Right arrow moves the decimal point one place to the right until no decimal point is displayed, and then it moves to the leftmost position.

There are three decimal points to set up for three channels: Ch-A, Ch-B, and Ch-C.

After the decimal points are set up, the meter moves to the *Program* menu.

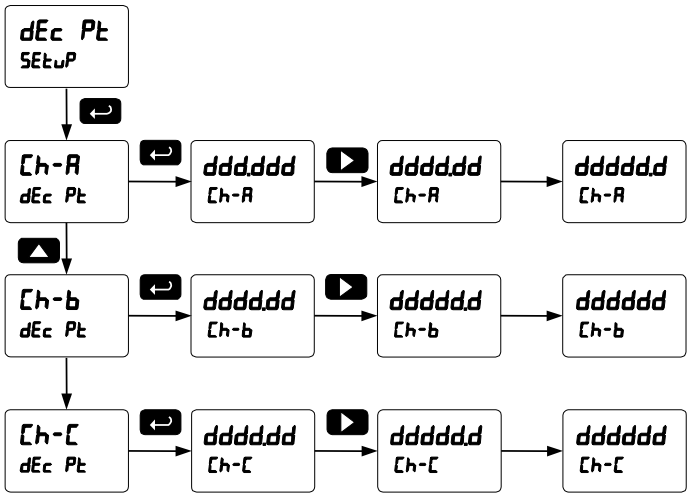

Programming the Meter (ProG)

It is **very important** to read the following information, before proceeding to program the meter:

- The meter is factory calibrated prior to shipment to read in milliamps and volts depending on the input selection. The calibration equipment is traceable to NIST standards.
- Use the *Scale* menu to scale the process input (e.g. 4-20 mA). A calibrated signal source is not needed to scale the meter.
- Use the *Calibrate* menu to apply a signal from a calibrator or a flowmeter.

The *Program* menu contains the *Scale* and the *Calibrate* menus for channels A & B.

The process inputs may be calibrated or scaled to any display value within the range of the meter.

Note: The Scale and Calibrate functions are exclusive of each other. The meter uses the last function programmed. Only one of these methods can be employed at a time. The Scale and Calibrate functions can use up to 32 points (default is 2). The number of points should be set in the Advanced Menu under the menu selection prior to scaling and calibration of the meter, see page 51 for details.

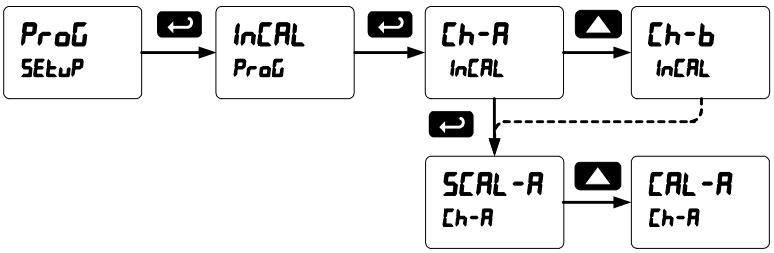

Multi-Point Linearization (L inEAr)

The process inputs may be calibrated or scaled to any display value within the range of the meter. The meter is set up at the factory for 2-point linear calibration.

Up to 32 linearization points may be selected. See page 51 for details.

MeterView® Pro Software

The meter can also be programmed using the PC-based MeterView Pro software available for free download at www.predig.com.

Data logging for one meter at the time is available with MeterView Pro software. More advanced data acquisition may be accomplished by using any Modbus RTU compliant software.

In order to program the meter using a computer, the meter must be connected using a USB, RS-232, or RS-485 serial adapter, see

Ordering Information on page 5 for details.

Scaling the Meter without a Signal Source

The process inputs (4-20 mA, ±10 VDC) can be scaled to display the process variables in engineering units.

A signal source is not needed to scale the meter; simply program the inputs and corresponding display values.

Scaling the Meter for Channel A (SCAL-A)

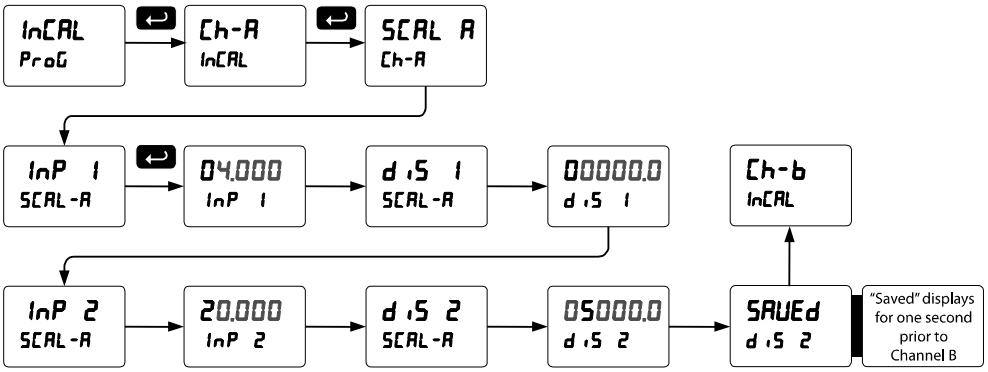

Scaling the Meter for Channel B (SCAL-b)

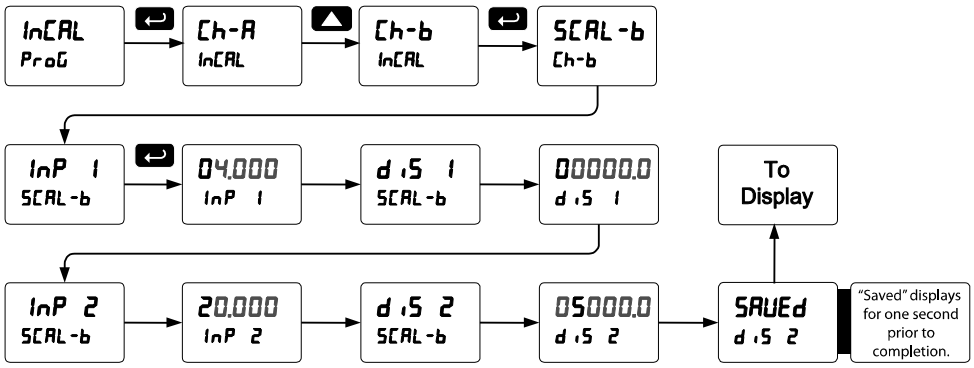

For instructions on how to program numeric values see *Setting Numeric Values*, page 27.

Error Message (Error)

An error message indicates that the calibration or scaling process was not successful.

After the error message is displayed, the meter reverts to input 2 during calibration or scaling and to input 1 during internal calibration, allowing the appropriate input signal to be applied or programmed.

The error message might be caused by any of the following conditions:

1. Input signal is not connected to the proper terminals or it is connected backwards.
2. Wrong signal selection in *Setup* menu.
3. Minimum input span requirements not maintained.
4. Input 1 signal inadvertently applied to calibrate input 2.

Minimum Input Span

The minimum input span is the minimum difference between input 1 and input 2 signals required to complete the calibration or scaling of the meter.

Input Range	Input 1 & Input 2 Span
4-20 mA	0.15 mA
±10 VDC	0.01 VDC

Calibrating the Meter with External Source

To scale the meter without a signal source, refer to *Scaling the Meter without a Signal Source*, *page 30*.	Warm up the meter for at least 15 minutes before performing calibration to ensure specified accuracy.

The meter can be calibrated to display the process variable in engineering units by applying the appropriate input signal and following the calibration procedure.

The use of a calibrated signal source is strongly recommended to calibrate the meter.

Calibrating the Meter for Channel A (CAL-A)

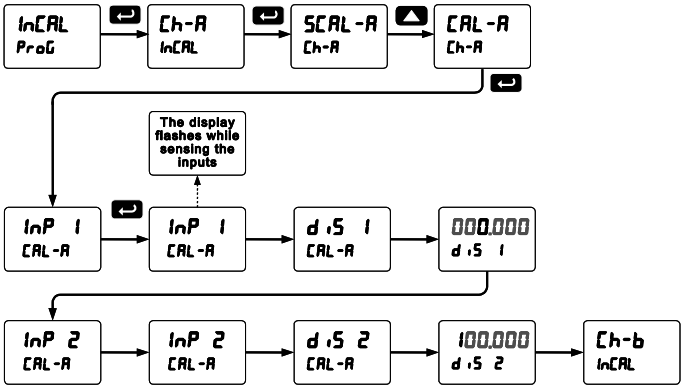

Calibrating the Meter for Channel B (CAL-b)

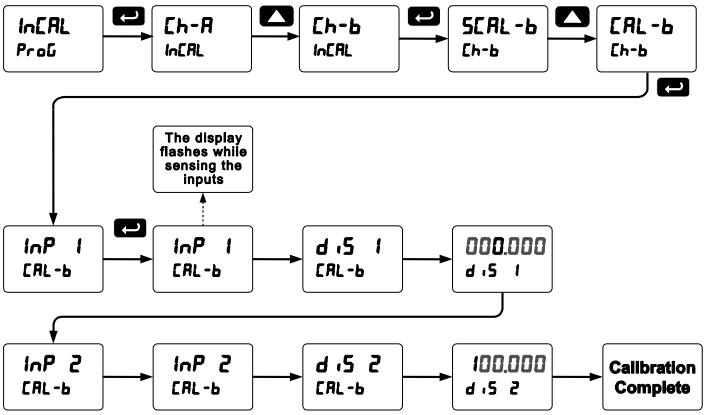

Setting the Display Parameter & Intensity (dSPLAY)

Display line 1 can be programmed to display:

1. Process value Ch-A
2. Process value Ch-B
3. Process value Ch-C
4. Toggle between Ch-A & Ch-B, Ch-A & Ch-C, Ch-B & Ch-C, and Ch-A, Ch-B, & Ch-C
5. Relay set points
6. Max & min values for each channel
7. Toggle between Channel & units
8. Channel gross value (no tare) or toggle net (tare) and gross values
9. Modbus input

Display line 2 can be programmed to display:

1. Process value Ch-A
2. Process value Ch-B
3. Process value Ch-C
4. Toggle between Ch-A & Ch-B, Ch-A & Ch-C, Ch-B & Ch-C, and Ch-A, Ch-B, & Ch-C
5. Relay set points
6. Max & min values for each channel
7. Toggle between Channel & units
8. Channel gross value (no tare) or toggle net (tare) and gross values
9. Modbus input
10. Off (no display)
11. Engineering units or custom legends

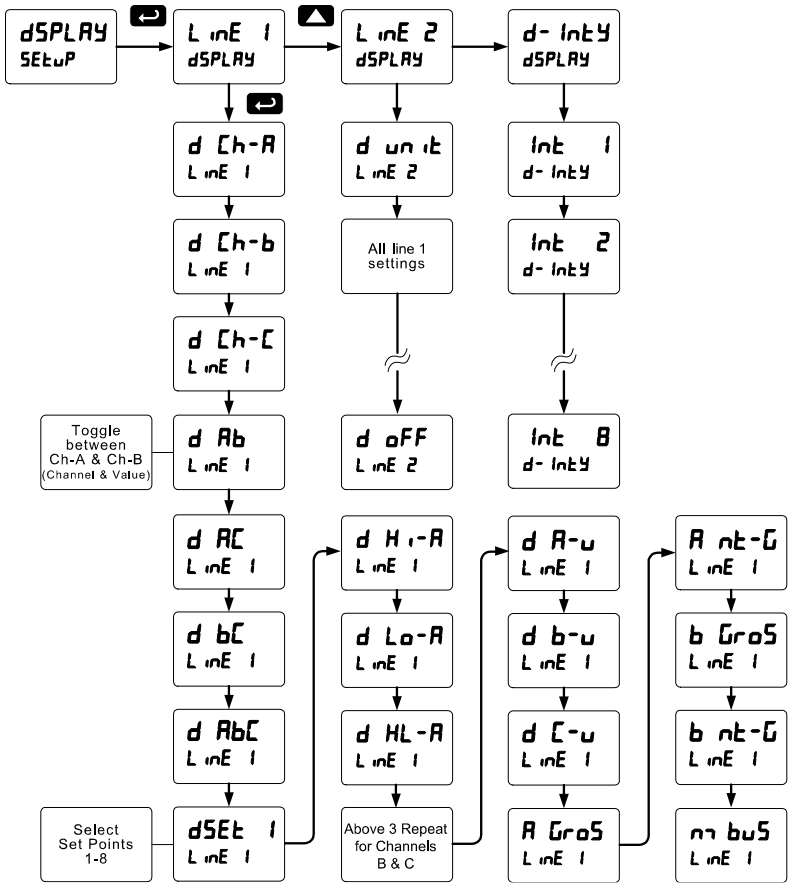

Display Intensity: The meter has eight display intensity levels to give the best performance under various lighting conditions. Select intensity 8 for outdoor applications. The default intensity setting is 8.

After setting up the input and display, press the Menu button to exit programming and skip the rest of the setup menu.

The displays can be set up to read channels A, B, or C, toggle between A & B, B & C, A & C, A & B & C, toggle between channels A, B, or C & units, the max/min of any of the channels, including the math channel (C), set points, gross (without tare) or net (with tare) & gross values of channel A or B, or the Modbus input. In addition to the parameters available on the Upper display, the Lower display can display Engineering units or it could be turned off.

Setting the Input Units or Custom Tags (units)

Enter the input unit or custom tag that will be displayed if alternating process input and units is selected in the units menu, or d unit is selected as the lower display parameter. See the flow chart on page 32 to access the display menu to show the unit or tag on the lower display. The engineering units or custom legends can be set using the following 7-segment character set:

Display	Character	Display	Character	Display	Character	Display	Character
0	0	C	C	k	K	v	V
1	1	c	c	l	L	u w	w
2	2	d	d	n m	m	x	X
3	3	e	E	n	n	y	Y
4	4	f	F	O	O	z	Z
5	5	g	G	o	o	-	-
6	6	9	g	p	P	/	/
7	7	H	H	q	q	[	]
8	8	h	h	r	r	]	[
9	9	I	I	s	S	=	=
A	A	I	i	t	t	!	Degree(<)
b	b	j	J	u	u		Space

Notes: Degree symbol represented by (<) if programming with MeterView® Pro. The letters "m" and "w" use two 7-segment LEDs each; when selected the characters to the right are shifted one position.

Press and hold up arrow to auto-scroll the characters in the display.

Setting the Relay Operation (rELAY)

This menu is used to set up the assignment and operation of the relays.

> **Caution!** *During setup, the relays do not follow the input and they will remain in the state found prior to entering the Relay menu.*

1. Relay assignment
   a. Channel A
   b. Channel B
   c. Channel C (Math channel)
   d. Modbus
2. Relay action
   a. Automatic reset only (non-latching)
   b. Automatic + manual reset at any time (non-latching)
   c. Latching (manual reset only)
   d. Latching with Clear (manual reset only after alarm condition has cleared)
   e. Pump alternation control (automatic reset only)
   f. Sampling (the relay is activated for a user-specified time)
   g. Off (relay state controlled by Interlock feature)
3. Set point
4. Reset point
5. Fail-safe operation
   a. On (enabled)
   b. Off (disabled)
6. Time delay
   a. On delay (0-999.9 seconds)
   b. Off delay (0-999.9 seconds)
7. Relay action for loss (break) of 4-20 mA input (ignore, on, off)

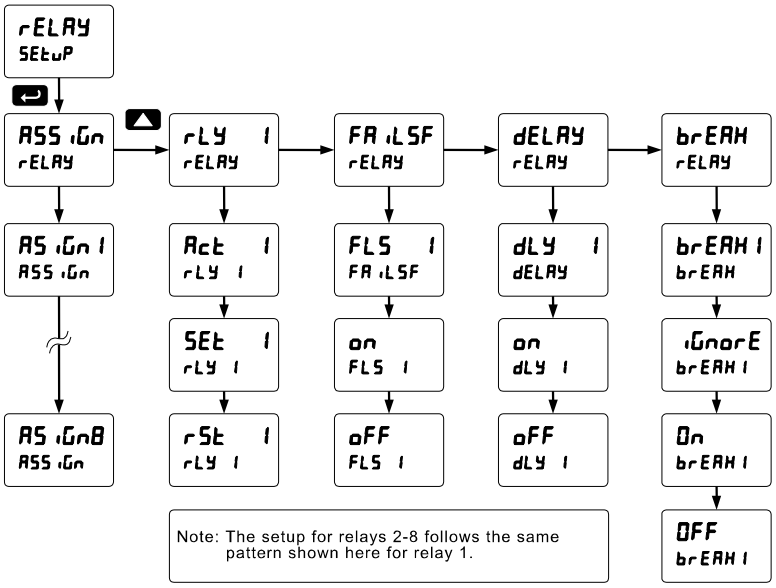

Setting the Relay Assignment (ASS iGn)

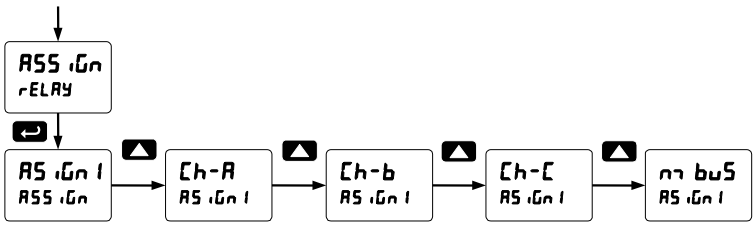

Setting the Relay Action

Operation of the relays is programmed in the *Action* menu. The relays may be set up for any of the following modes of operation:

1. Automatic reset (non-latching)
2. Automatic + manual reset at any time (non-latching)
3. Latching (manual reset only, at any time)
4. Latching with Clear (manual reset only after alarm condition has cleared)
5. Pump alternation control (automatic reset only)
6. Sampling (the relay is activated for a user-specified time)
7. Off (relay state controlled by Interlock feature)

The following graphic shows relay 1 action setup; relay 2-4 are set up in a similar fashion.

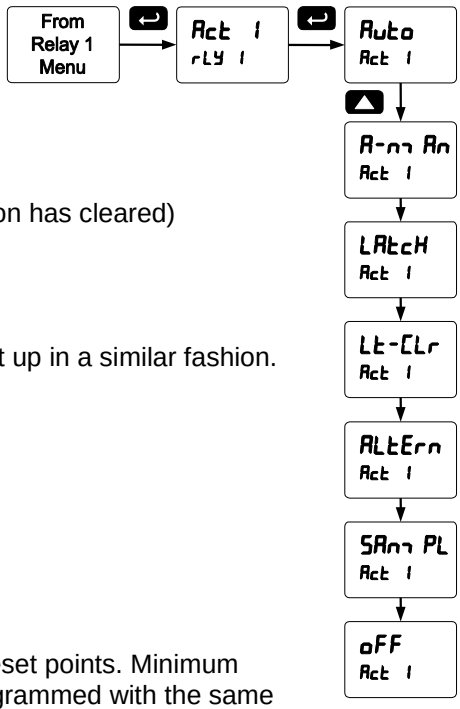

Programming Set and Reset Points

High alarm indication: program set point above reset point.
Low alarm indication: program set point below reset point.
The deadband is determined by the difference between set and reset points. Minimum deadband is one display count. If the set and reset points are programmed with the same value, the relay will reset one count below the set point.

Note: Changes are not saved until the reset point has been accepted.

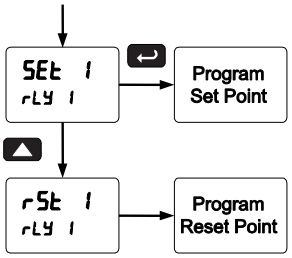

Setting Fail-Safe Operation

In fail-safe mode of operation, the relay coil is energized when the process variable is within safe limits and the relay coil is de-energized when the alarm condition exists. The fail-safe operation is set independently for each relay. Select **on** to enable or select **oFF** to disable fail-safe operation.

Programming Time Delay

The *On* and *Off* time delays may be programmed for each relay between 0 and 999.9 seconds. The relays will transfer only after the condition has been maintained for the corresponding time delay.

The *On* time delay is associated with the set point.

The *Off* time delay is associated with the reset point.

Relay Action for Loss of 4-20 mA Input (Loop Break)

The loop break feature is associated with the 4-20 mA input. Each relay may be programmed to go to one of the following conditions when the meter detects the loss of the input signal (i.e. < 0.005 mA):

1. Turn *On* (Go to alarm condition)
2. Turn *Off* (Go to non-alarm condition)
3. Ignore (Processed as a low signal condition)

Note: This is not a true loop break condition; if the signal drops below 0.005 mA, it is interpreted as a "loop break" condition.

Relay and Alarm Operation Diagrams

The following graphs illustrate the operation of the relays, status LEDs, and ACK button.

High Alarm Operation (Set > Reset)

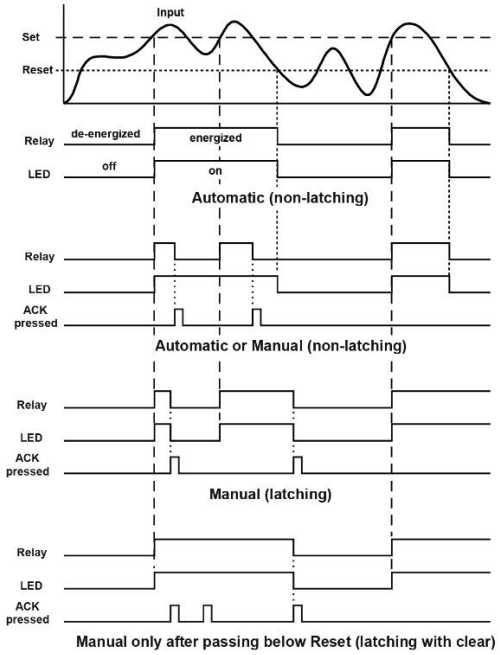

For Manual reset mode, ACK can be pressed anytime to turn "off" relay. To detect a new alarm condition, the signal must go below the set point, and then go above it.

Low Alarm Operation (Set < Reset)

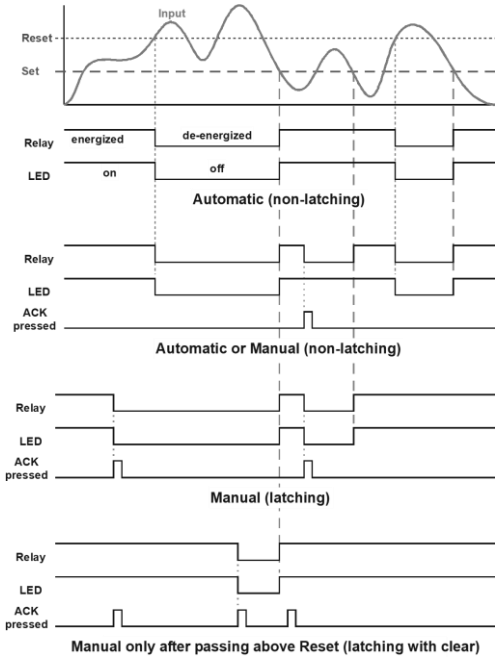

For Manual reset mode, ACK can be pressed anytime to turn "off" relay. For relay to turn back "on", signal must go above set point, and then go below it.

High Alarm with Fail-Safe Operation (Set > Reset)

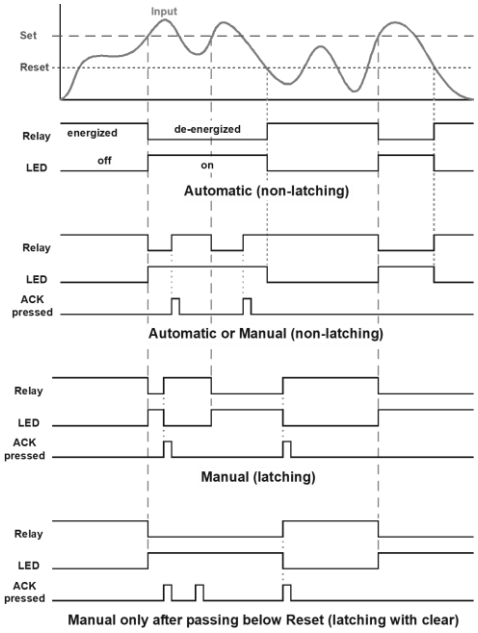

Note: Relay coil is energized in non-alarm condition. In case of power failure, relay will go to alarm state.

Low Alarm with Fail-Safe Operation (Set < Reset)

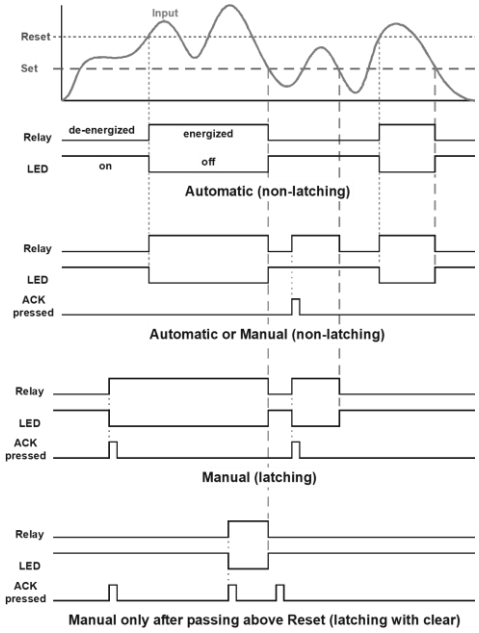

Note: Relay coil is energized in non-alarm condition. In case of power failure, relay will go to alarm state.

Pump Alternation Control Operation

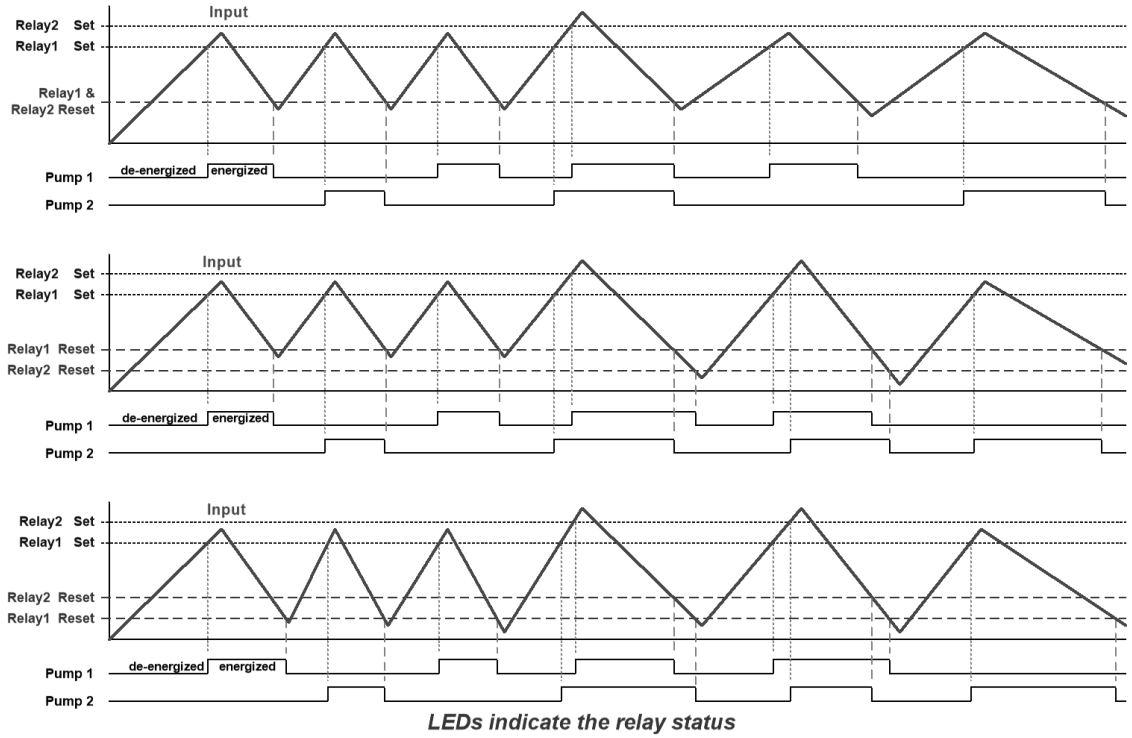

Relay Sampling Operation

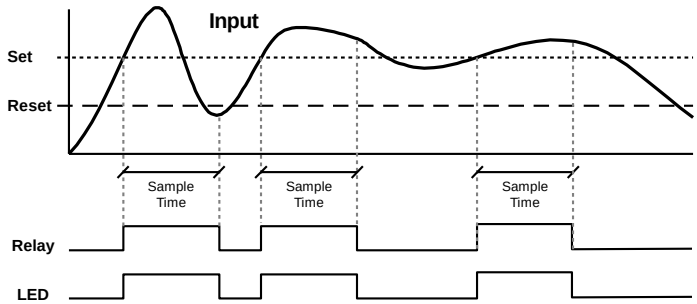

When the signal crosses the set point, the relay trips and the sample time starts. After the sample time has elapsed, the relay resets. The cycle repeats every time the set point is crossed, going up for high alarms and going down for low alarms.

The sample time can be programmed between 0.1 and 5999.9 seconds.

Signal Loss or Loop Break Relay Operation

The following graph shows the loop break relay operation for a high alarm relay.

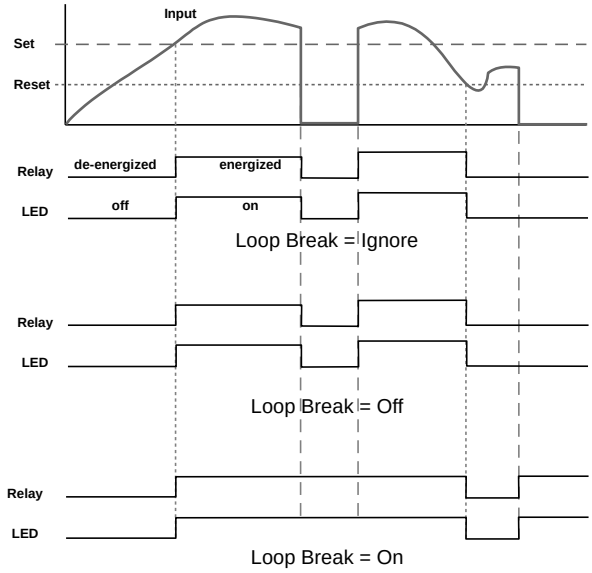

When the meter detects a break in the 4-20 mA loop, the relay will go to one of the following selected actions:

1. Turn *On* (Go to alarm condition)
2. Turn *Off* (Go to non-alarm condition)
3. Ignore (Processed as a low signal condition)

Time Delay Operation

The following graphs show the operation of the time delay function.

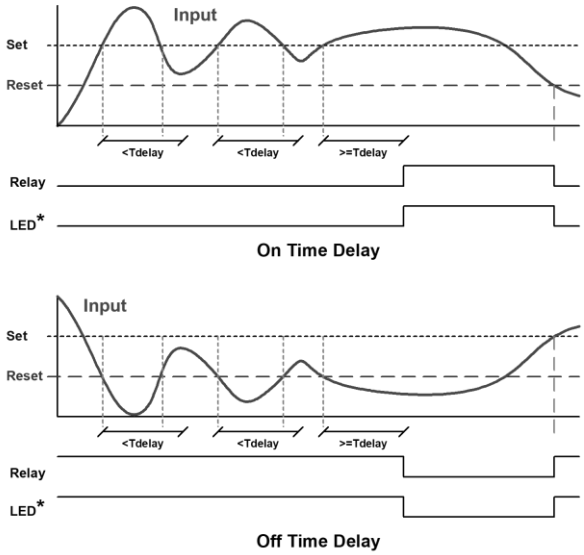

When the signal crosses the set point, the *On* time delay timer starts and the relay trips when the time delay has elapsed. If the signal drops below the set point (high alarm) before the time delay has elapsed, the *On* time delay timer resets and the relay does not change state. The same principle applies to the *Off* time delay.

Note: If "Automatic or Manual (A-m A_m)" reset mode is selected, the LED follows the reset point and not the relay state when the relay is acknowledged.

Relay Operation Details

Overview

The relay capabilities of the meter expand its usefulness beyond simple indication to provide users with alarm and control functions. These capabilities include front panel alarm status LEDs as well as either 2 or 4 optional internal relays. Typical applications include high or low temperature, level, pressure or flow alarms, control applications such as simple on/off pump control, and pump alternation control for up to 4 pumps. There are four basic ways the relays can be used:

1. High or Low Alarms with Latching or Non-Latching Relays
2. Simple On/Off Control with 100% Adjustable Deadband
3. Sampling (Based on Time)
4. Pump Alternation Control for up to 4 Pumps

Relays Auto Initialization

When power is applied to the meter, the front panel LEDs and alarm relays will reflect the state of the input to the meter. The following table indicates how the alarm LEDs and relays will react on power-up based on the set and reset points:

Alarm #	HI or LO Alarm	Set Point	Reset Point	Power-Up Reading	Relay & LED
1	HI	1000	500	499	Off
2	LO	700	900	499	On
3	LO	250	400	499	Off
4	HI	450	200	499	On

Fail-Safe Operation

The following table indicates how the relays behave based on the fail-safe selection for each relay:

Fail-Safe Selection	Non-Alarm State		Alarm State		Power Failure
	NO	NC	NO	NC	
Off	Open	Closed	Closed	Open	Relays go to non-alarm state
On	Closed	Open	Open	Closed	Relays go to alarm state

Note: NO = Normally Open, NC = Normally Closed. This refers to the condition of the relay contacts when the power to the meter is off.

Front Panel LEDs

The LEDs on the front panel provide status indication for the following:

LED	Status
1	Alarm 1
2	Alarm 2
3	Alarm 3
4	Alarm 4

LED	Status
5	Alarm 5
6	Alarm 6
7	Alarm 7
8	Alarm 8

The meter is supplied with four alarm points that include front panel LEDs to indicate alarm conditions. This standard feature is particularly useful for alarm applications that require visual-only indication. The LEDs are controlled by the set and reset points programmed by the user. When the display reaches a set point for a high or low alarm, the corresponding alarm LED will turn on. When the display returns to the reset point the LED will go off. The front panel LEDs responds differently for latching and non-latching relays.

For non-latching relays, the LED is always off during normal condition and always on during alarm condition, regardless of the state of the relay (e.g. Relay acknowledged after alarm condition).

For latching relays, the alarm LEDs reflects the status of the relays, regardless of the alarm condition. The following tables illustrate how the alarm LEDs function in relation to the relays and the acknowledge button (Default: F3 key assigned to ACK):

Latching and Non-Latching Relay Operation

The relays can be set up for latching (manual reset) or non-latching (automatic reset) operation.

The On and Off terminology does not refer to the status of the relay's coil, which depends on the fail-safe mode selected.

Relay terminology for following tables	
Terminology	**Relay Condition**
On	Alarm (Tripped)
Off	Normal (Reset)
Ack	Acknowledged

Warning! ***In latching relay mode, latched relays will reset (unlatch) when power is cycled.***

Non-Latching Relay (Auto)

In this application, the meter is set up for automatic reset (non-latching relay). Acknowledging the alarm while it is still present has no effect on either the LED or the relay. When the alarm finally goes away, the relay automatically resets and the LED also goes off.

Automatic reset only		
Condition	**LED**	**Relay**
Normal	Off	Off
Alarm	On	On
Ack (No effect)	On	On
Normal	Off	Off

Non-Latching Relay (A-nn An)

In this application, the meter is set up for automatic and manual reset at any time (non-latching relay). The LED and the relay automatically reset when the meter returns to the normal condition.

The next time an alarm occurs, the operator acknowledges the alarm manually while the alarm condition still exists. This causes the relay to reset, but the LED stays on until the meter returns to the normal condition.

Automatic + manual reset at any time		
Condition	**LED**	**Relay**
Normal	Off	Off
Alarm	On	On
Normal	Off	Off
Next Alarm	On	On
Ack	On	Off
Normal	Off	Off

Latching Relay (LAtcH)

In this application, the meter is set up for manual reset at any time. Acknowledging the alarm even if the alarm condition is still present resets the relay and turns off the LED.

Manual reset any time		
Condition	**LED**	**Relay**
Normal	Off	Off
Alarm	On	On
Ack	Off	Off

Latching Relay (LE-CLr)

In this application, the meter is set up for manual reset only after the signal passes the reset point (alarm condition has cleared). Acknowledging the alarm while it is still present has no effect on either the LED or the relay. When the alarm is acknowledged after it returns to the normal state, the LED and the relay go off. Notice that the LED remains on, even after the meter returns to the normal condition. This is because, for latching relays, the alarm LED reflects the status of the relay, regardless of the alarm condition.

Manual reset only after alarm condition has cleared		
Condition	**LED**	**Relay**
Normal	Off	Off
Alarm	On	On
Ack (No effect)	On	On
Normal	On	On
Ack	Off	Off

Acknowledging Relays

There are two ways to acknowledge relays programmed for manual reset:

1. Via the programmable front panel function keys F1-F3 (Default: F3 assigned to ACK).
2. Remotely via a normally open pushbutton wired across one of the digital inputs and the +5 V terminals on the digital I/O modules, or using the F4 digital input, which is triggered with a contact closure to COM, or with an active low signal (see page 20).

When the ACK button or the assigned digital input is closed, all relays programmed for manual reset are acknowledged.

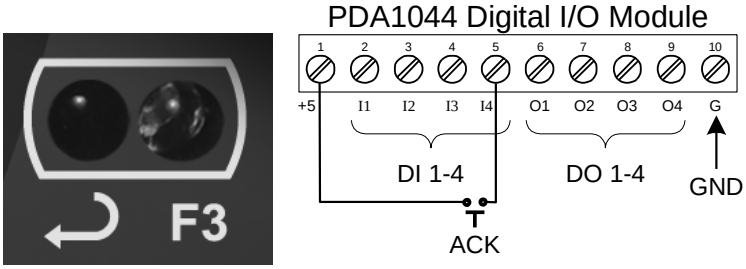

Figure 19. Acknowledge Relays w/Function Key or Digital Input

Pump Alternation Control Applications (ALtErn)

For pump control applications where two or more similar pumps are used to control the level of a tank or a well, it is desirable to have all the pumps operate alternately. This prevents excessive wear and overheating of one pump over the lack of use of the other pumps.

Up to 4 relays can be set up to alternate every time an on/off pump cycle is completed. The set points and reset points can be programmed, so that the first pump on is the first pump off.

Application #1: Pump Alternation Using Relays 1 & 2

1. Relays 1 and 2 are set up for pump alternation.
2. Relays 3 and 4 are set up for low and high alarm indication.

Set and Reset Point Programming with Pump Alternation

Relay	Set Point	Reset Point	Function
1	30.000	10.000	Controls pump 1 & 2
2	35.000	5.000	Sets dual pump trigger
3	4.000	9.000	Controls low alarm
4	40.000	29.000	Controls high alarm

Pump Alternation Operation

1. Pump #1 turns on when level reaches 30.000, when level drops below 10.000 pump #1 turns off.
2. The next time level reaches 30.000, pump #2 turns on, when level drops below 10.000, pump #2 turns off.
3. If the level doesn’t reach 35.000 pump #1 and pump #2 will be operating alternately.
4. If pump #1 cannot keep the level below 35.000 pump #2 will turn on at 35.000, then as the level drops to 10.000 pump #1 turns off, pump #2 is still running and shuts off below 5.000.
5. Notice that with the set and reset points of pump #2 outside the range of pump #1, the first pump on is the first pump to go off. This is true for up to 4 alternating pumps, if setup accordingly.
6. Relay #3 will go into alarm if the level drops below 4.000 and relay #4 will go into alarm if the level exceeds 40.000.

Setting Up the Interlock Relay (Force On) Feature

Relays 1-4 can be set up as interlock relays. To set up the relays for the interlock feature:

1. Access the *Setup – Relay – Action* menu and set the action to off.

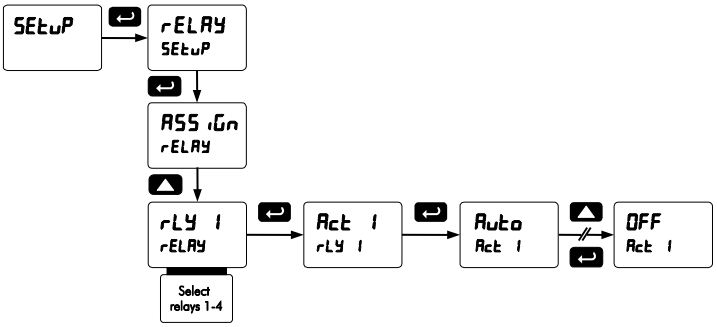

2. In the Advanced features – *User* menu program any of the digital inputs to *Force On* any of the internal relays (1-4).

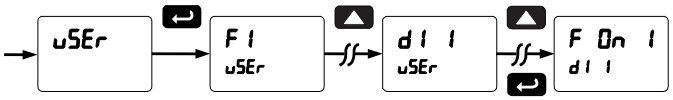

3. Connect a switch or dry contact between the +5V terminal and the corresponding digital input (dI-1 to dI-4) terminal.

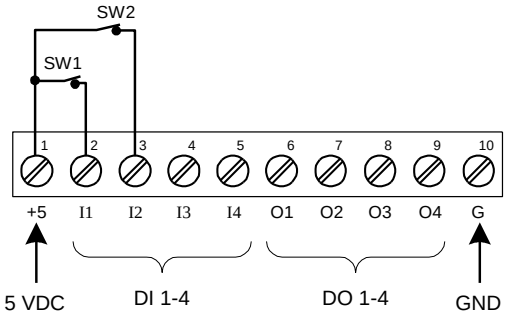

Interlock Relay Operation Example

Relays 1 & 2 are configured to energize (their front panel LEDs are off) when SW1 & SW2 switches (above) are closed. If the contacts to these digital inputs are opened, the corresponding front panel LEDs flash, indicating this condition. The processes being controlled by the interlock relay will stop, and will re-start only after the interlock relay is re-activated by the digital inputs (switches).

Note: If multiple digital inputs are assigned to the same relay, then the corresponding logic is (AND) – i.e. both switches must be closed to trip the relay.

Scaling the 4-20 mA Analog Output (Aout)

The 4-20 mA analog outputs can be scaled to provide a 4-20 mA signal for any display range selected. To select the channel and source assignments the analog outputs are assigned to, see *Analog Output Source* on page 53.

No equipment is needed to scale the analog outputs; simply program the display values to the corresponding mA output signal.

The *Analog Output* menu is used to program the 4-20 mA outputs based on display values.

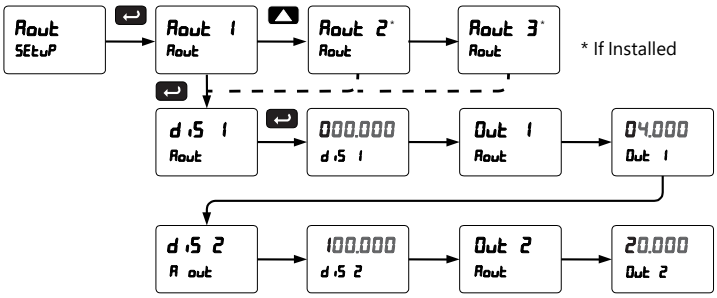

For instructions on how to program numeric values see *Setting Numeric Values*, page 27.

Reset Menu (rESEt)

The *Reset* menu is used to reset the maximum or minimum reading (peak or valley) reached by the process; both may be reset at the same time by selecting “reset high & low” (rSt HL). The tare value used to zero the display may be reset by selecting “reset tare” (rSt tr).

Control Menu (ContrL)

The *Control* menu is used to control the 4-20 mA analog output and the relays manually, ignoring the input. Each relay and analog output can be programmed independently for manual control. Selecting automatic control sets all relays and analog output for automatic operation.

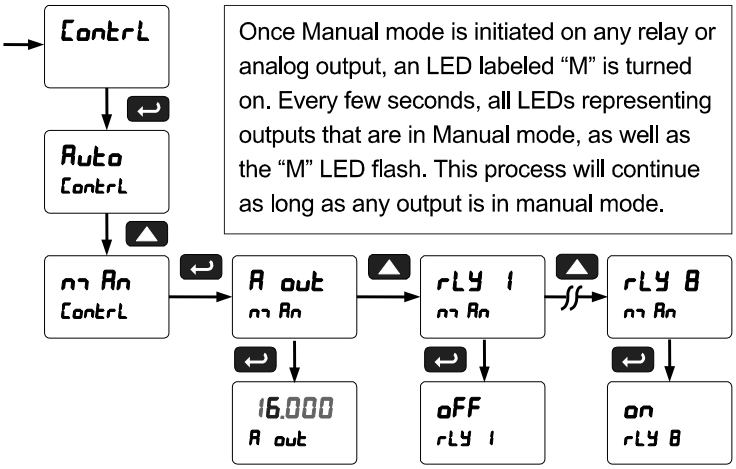

Setting Up the Password (PASS)

The *Password* menu is used for programming three levels of security to prevent unauthorized changes to the programmed parameter settings.

Pass 1: Allows use of function keys and digital inputs
Pass 2: Allows use of function keys, digital inputs and editing set/reset points
Pass 3: Restricts all programming, function keys, and digital inputs.

Protecting or Locking the Meter

Enter the *Password* menu and program a six-digit password.

For instructions on how to program numeric values see *Setting Numeric Values*, page 27.

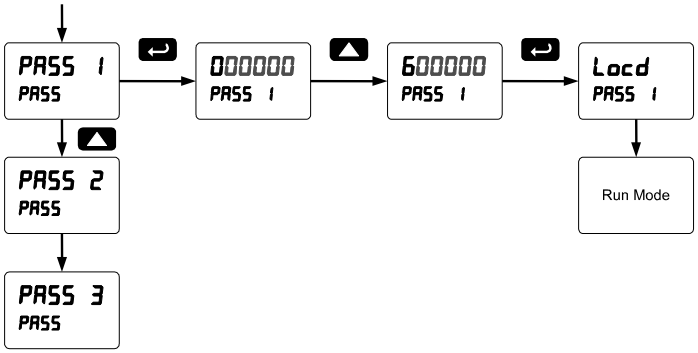

Making Changes to a Password Protected Meter

If the meter is password protected, the meter will display the message Locd (*Locked*) when the Menu button is pressed. Press the Enter button while the message is being displayed and enter the correct password to gain access to the menu. After exiting the programming mode, the meter returns to its password protected condition.

Disabling Password Protection

To disable the password protection, access the *Password* menu and enter the correct password twice, as shown below. The meter is now unprotected until a new password is entered.

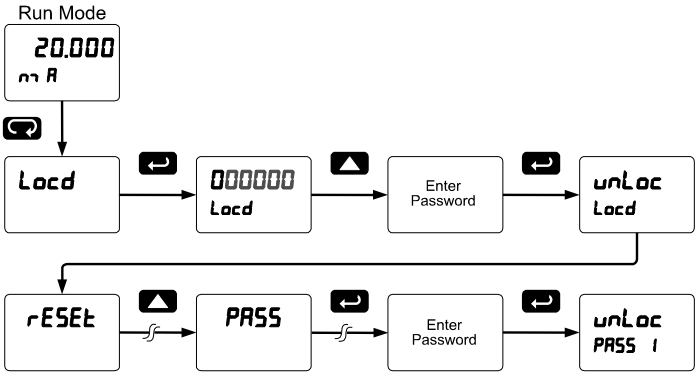

If the correct six-digit password is entered, the meter displays the message unLoc (*Unlocked*) and the protection is disabled until a new password is programmed.

If the password entered is incorrect, the meter displays the message Locd (*Locked*) for about two seconds, and then it returns to Run Mode. To try again, press Enter while the *Locked* message is displayed.

Did you forget the password?

The password may be disabled by entering a master password once. If you are authorized to make changes, enter the master password 508655 to unlock the meter.

Advanced Features Menu

To simplify the setup process, functions not needed for most applications are located in the *Advanced Features* menu.

Press and hold the Menu button for three seconds to access the advanced features of the meter.

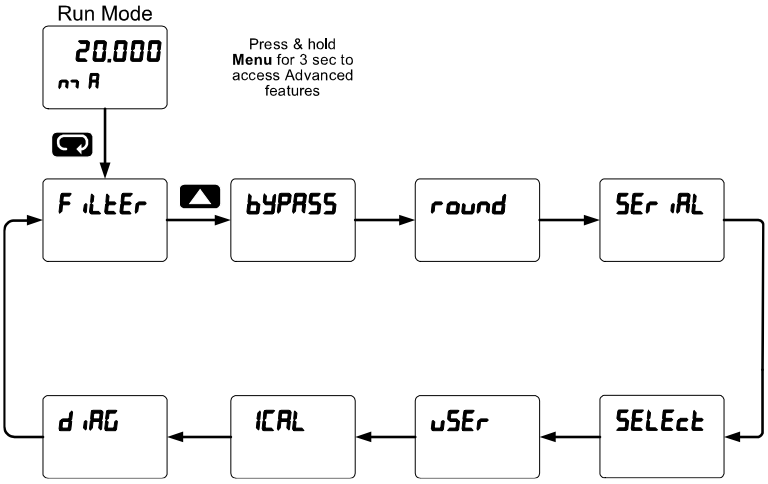

Advanced Features Menu & Display Messages

The following table shows the functions and messages of the *Advanced Features* menu in the order they appear in the menu.

Display	Parameter	Action/Setting
filtEr	*Filter*	Set noise filter value
Ch-A	*Channel A*	Set filter value for channel A
Ch-b	*Channel B*	Set filter value for channel B
bypASs	*Bypass*	Set filter bypass value
Ch-A	*Channel A*	Set filter bypass value for channel A
Ch-b	*Channel B*	Set filter bypass value for channel B
Round	*Round*	Set the rounding value for display variables
seriAl	*Serial*	Set serial communication parameters
SlaveId	*Slave ID*	Set slave ID or meter address
Baud	*Baud rate*	Select baud rate
Tr dLY	*Transmit delay*	Set transmit delay for serial communication
Parity	*Parity*	Select parity Even, Odd, or None with 1 or 2 stop bits
t-byt	*Time byte*	Set byte-to-byte timeout
SelEct	*Select*	Enter the Select menu (function, cutoff, out)

Display	Parameter	Action/Setting
Functn	*Signal input conditioning*	Select linear, square root, programmable exponent, or round horizontal tank
Ch-A	*Channel A*	Select menu for channel A
Ch-b	*Channel B*	Select menu for channel B
Linear	*Linear*	Set meter for linear function and select number of linearization points
No pts	*Number of points*	Set the number of linearization points (default: 2)
Square	*Square root*	Set meter for square root extraction
Prog E	*Programmable exponent*	Set meter for programmable exponent and enter exponent value
Rht	*Round horizontal tank*	Set meter for round horizontal tank volume calculation
Length	*Length*	Enter the tank's length in inches
dianmr	*Diameter*	Enter the tank's diameter in inches
nmath	*Math*	Enter the setup menu for channel C math functions
Sunm	*Sum*	Channel C = (A+B+P)*F
Dif	*Difference*	Channel C = (A-B+P)*F

Display	Parameter	Action/Setting
difabs	*Absolute difference*	Channel C = ((Absolute value of (A-B))+P)*F
Avg	*Average*	Channel C = (((A+B)/2)+P)*F
nmulti	*Multiplication*	Channel C = ((A*B)+P)*F
Divide	*Divide*	Channel C = ((A/B)+P)*F
Hi-ab	*Max of A or B*	C = ((High value of channel A or B)+P)*F
Lo-ab	*Min of A or B*	C = ((Low value of channel A or B)+P)*F
Drauw	*Draw*	Channel C = ((A/B)-1)*F
uwAvg	*Weighted avg.*	Channel C = ((B-A)*F)+A
ratio	*Ratio*	Channel C = (A/B)*F
Ratio2	*Ratio 2*	C = ((B-A)/A)+P)*F
Concen	*Concentration*	Channel C = (A/(A+B))*F
Const	*Constant*	Constant used in channel C math
adder	*Adder*	Addition constant used in channel C math calculations (P)
factor	*Factor*	Multiplication constant used in channel C math calculations (F)
CutofF	*Cutoff*	Set low-flow cutoff
Ch-A	*Channel A*	Set low-flow cutoff for Channel A
Ch-b	*Channel B*	Set low-flow cutoff for Channel B
AoutPr	*Analog output programming*	Program analog output parameters
AOut 1*	*Analog output 1*	Program analog output 1 (*1-3) parameters
Source	*Source*	Select source for the 4-20 mA output
brEAH	*Loop break*	Set relay condition if loop break detected
O-rang	*Overrange*	Program mA output for display overrange
u-rang	*Underrange*	Program mA output for display underrange
nmAx	*Maximum*	Program maximum mA output allowed

Display	Parameter	Action/Setting
nmin	*Minimum*	Program minimum mA output allowed
Calib	*Calibrate*	Calibrate 4-20 mA output (internal reference source used for scaling the output)
4 nmA	*4 mA output*	Enter mA output value read by milliamp meter with at least 0.001 mA resolution
20 nmA	*20 mA output*	Enter mA output value read by milliamp meter with at least 0.001 mA resolution
User	*User I/O*	Assign function keys and digital I/O
F1*	*F1* function key*	Assign F1 function key (*F1/F2/F3)
F4	*F4 function*	Assign F4 function (digital input)
dI I	*Digital input 1*	Assign digital input 1 – 4
dO 1	*Digital output 1*	Assign digital output 1 – 4
ICal	*Internal calibration*	Enter internal calibration (used for recalibrating the meter with a calibrated signal source)
Ch-A	*Channel A*	Perform calibration on channel A
Ch-b	*Channel B*	Perform calibration on channel B
C CAL	*Current calibration*	Calibrate 4-20 mA current input (internal reference source used for scaling the input)
C lo	*Current low*	Calibrate low current input (e.g. 4 mA)
C Hi	*Current high*	Calibrate high current input (e.g. 20 mA)
v CAL	*Voltage calibration*	Calibrate voltage input
v Lo	*Voltage low*	Calibrate low voltage input (e.g. 0 V)
v Hi	*Voltage high*	Calibrate high voltage input (e.g. 10 V)
Diag	*Diagnostics*	Display parameter settings
LEd t	*LED test*	Test all LEDs
InFo	*Information*	Display software and S/N information

Noise Filter (FILTER)

The noise filter is available for unusually noisy signals that cause an unstable process variable display. The noise filter averages the input signal over a certain period. The filter level determines the length of time over which the signal is averaged. The filter level can be set between 2 and 199. The higher the filter level, the longer the averaging time and so the longer it takes the display to settle to its final value. Setting the filter level to zero disables the filter function.

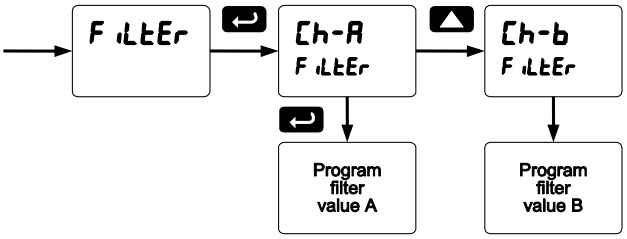

Noise Filter Bypass (bypass)

The noise filter bypass changes the behavior of the meter so that small variations in the signal are filtered out but large abrupt changes in the input signal are displayed immediately. The bypass value determines the minimum amount of signal change to be displayed immediately. All signal changes smaller than the bypass value are filtered or averaged by the meter. The noise filter bypass may be set between 0.1 and 99.9% of full scale.

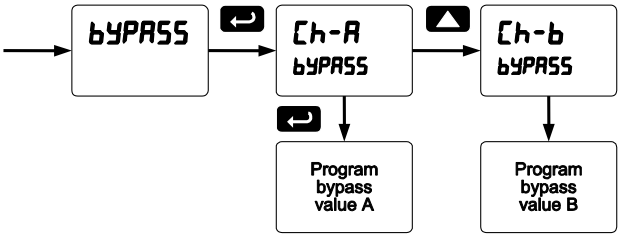

Rounding Feature (round)

The rounding feature is used to give the user a steadier display with fluctuating signals. Rounding is used in addition to the filter function.

Rounding causes the display to round to the nearest value according to the rounding selected. This setting affects the last two digits, regardless of decimal point position.

Modbus RTU Serial Communications (SERIAL)

The meter is equipped with serial communications capability as a standard feature using Modbus RTU Serial Communication Protocol.

The meter may be connected to a PC for initial configuration via the onboard micro USB connection. For ongoing digital communications with a computer or other data terminal equipment, an RS-232, or RS-485 option is required; see *Ordering Information* on page 5 for details.

Warning!	***Do not connect any equipment other than Precision Digital's expansion modules, cables, or meters to the RJ45 M-LINK connector. Otherwise damage will occur to the equipment and the meter.***

Note: More detailed instructions are provided with each optional serial communications adapter.

Note: Refer to the ProVu® Modbus Register Tables located at www.predig.com for details.

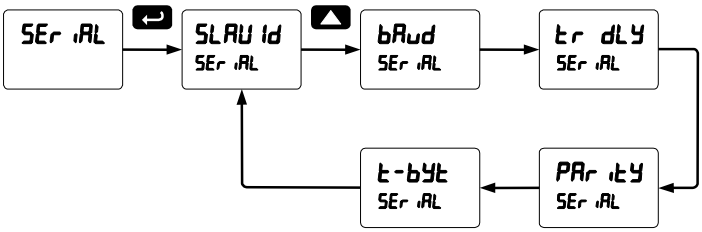

When using more than one meter in a multi-drop mode, each meter must be provided with its own unique address. The meter address (Slave ID) may be programmed between 1 and 247. The transmit delay may be set between 0 and 199 ms. The parity can be set to even, odd, or none with 1 or 2 stop bits.

Changes made to the Serial menu are initialized after the MENU key is pressed or after navigating through the t-byte parameter.

Serial Communications Overview

RS-232 and RS-485 are standard interfaces approved by the Electronic Industries Alliance (EIA) for connecting serial devices. In EIA terms, the device (e.g. meter) that connects to the interface is called a Data Communications Equipment (DCE) and the device to which it connects (e.g. the computer) is called a Data Terminal Equipment (DTE).

RS-485 can support multi-point connections per line because it uses lower-impedance drivers and receivers.

Line drivers and receivers are used to exchange data between two or more points (nodes) on a serial communications network. Reliable data communications can be difficult in the presence of induced noise, ground level differences, and other hazards associated with installation of a network. When communicating at high data rates, or over long distances in real world environments, RS-232 is often inadequate. The differential data transmission of RS-485 offers superior performance in most applications. Differential signals can help nullify the effects of ground shifts and induced noise signals that can appear as common mode voltages on a network.

A multi-point network consists of multiple drivers and receivers connected on a single bus, where any point (node) can transmit and/or receive data. RS-485 allows multiple drivers and receivers on the same two-wire or four-wire system. The RS-485 standard specifies up to 32 drivers and 32 receivers on a single bus, but with the introduction of "automatic" repeaters and high-impedance drivers/receivers, this number can be extended to hundreds of points (nodes) on a network.

The cabling used for an RS-485 serial communications network should always be a high quality cable such as Belden 8162 or Alpha 6203C. A two-wire system requires two twisted pairs, and a four-wire system requires three twisted pairs (the extra twisted pair is needed for the signal ground).

Figure 20 illustrates how to connect a general four-wire network (a four-wire network actually contains 5 wires).

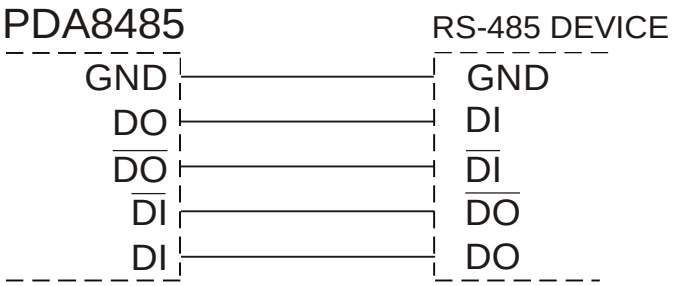

Figure 20: General Four-Wire Network Connection

Figure 21 illustrates how to connect a general two-wire network (a two-wire network actually contains 3 wires). Note that the PDA7485 and PDA8485 have DIP switches that allow for two-wire connections without the need to externally wire the DO to the DI and the /DO to the /DI (see the converter section for complete details).

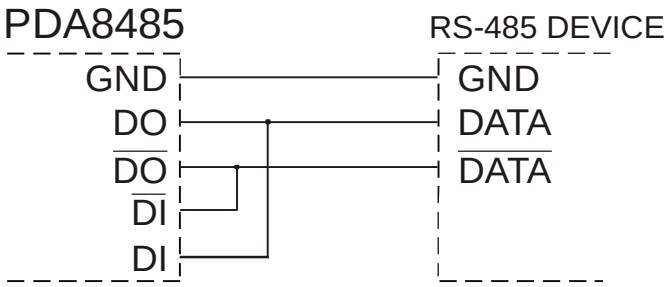

Figure 21: General Two-Wire Network Connection

Select Menu (SELEct)

The *Select* menu is used to select the signal input conditioning function applied to the inputs (linear, square root, programmable exponent, or round horizontal tank), math function for A & B, constants, low-flow cutoff, and analog output programming. Multi-point linearization is part of the linear function selection.

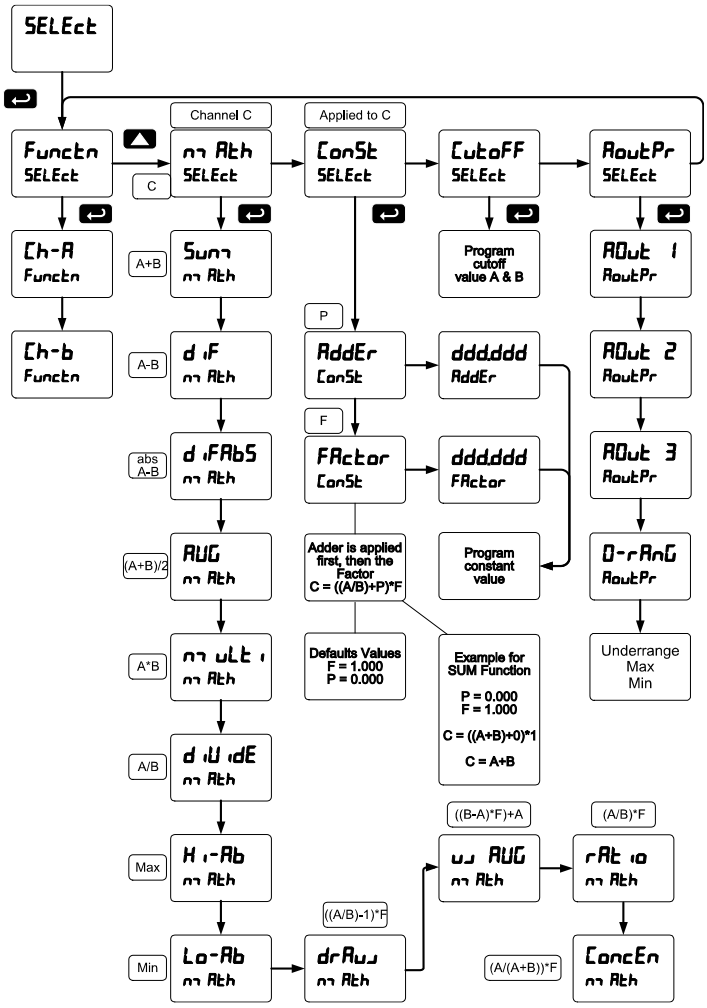

Signal Input Conditioning (Functn)

The *Function* menu is used to select the input-to-output transfer function applied to the input signal: linear, square root, programmable exponent, or round horizontal tank volume calculation. Multi-point linearization is part of the linear function selection.

Meters are set up at the factory for linear function with 2-point linearization. The linear function provides a display that is linear with respect to the input signal.

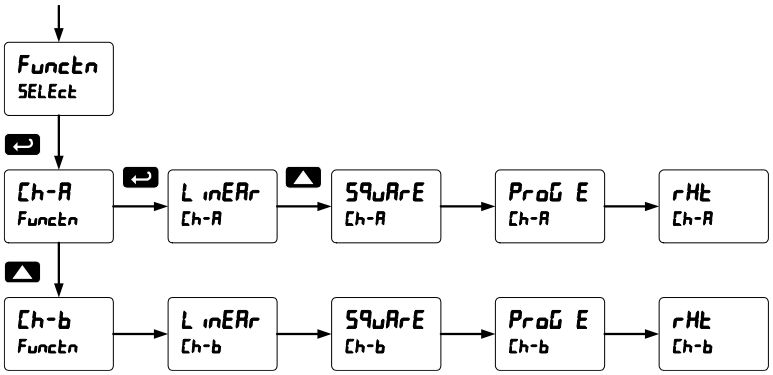

Square Root Linearization (SqurE)

The square root function is used to calculate flow measured with a differential pressure transmitter. The flow rate is proportional to the square root of the differential pressure. Scale the meter so that the low input signal (e.g. 4 mA) is equal to zero flow and the high input signal (e.g. 20 mA) is equal to the maximum flow.

Programmable Exponent Linearization (ProG E)

The programmable exponent function is used to calculate open-channel flow measured with a level transmitter in weirs and flumes. The flow rate is proportional to the head height. Scale the meter so that the low input signal (e.g. 4 mA) is equal to zero flow and the high input signal (e.g. 20 mA) is equal to the maximum flow. This method works well for all weirs and flumes that have a simple exponent in the flow calculation formula. For weirs and flumes with complex exponents it is necessary to use a strapping table and the 32-point linearization of the meter.

Multi-Point Linearization (L inEAr)

Meters are set up at the factory for linear function with 2-point linearization. Up to 32 linearization points can be selected for each channel under the linear function. The multi-point linearization can be used to linearize the display for non-linear signals such as those from level transmitters used to measure volume in odd-shaped tanks or to convert level to flow using weirs and flumes with complex exponent.

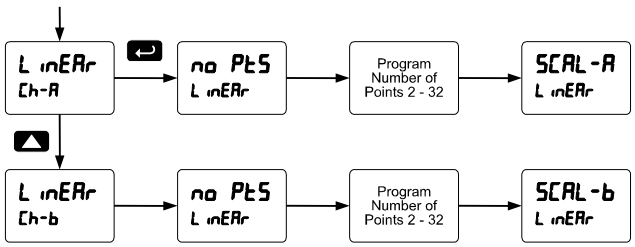

Round Horizontal Tank Linearization (rHt)

This function is used to calculate volume in a round horizontal tank with flat ends. The volume is calculated based on the diameter and length of the tank. The tank's dimensions can be entered in inches or centimeters; the meter automatically calculates the volume in gallons or liters. After entering the dimensions, complete the scaling process with the display values calculated by the meter. The meter can be re-scaled to display the volume in any engineering unit without the need to re-enter the dimensions again.

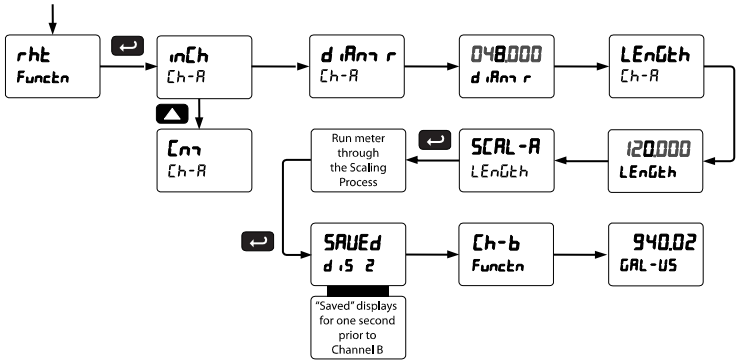

Note: After Scale is displayed continue pressing the Enter button until the meter completes the scaling of the input and display values.

Changing the Volume from Gallons to Liters

In the above graphic, entering the 48" for the diameter and 120" for the length of the round horizontal tank, the meter automatically calculates that the volume of the tank is 940.02 gallons.

1. Convert gallons to liters
   1 US gallon = 3.7854 L
   940.02 gal = 3558.4 L
2. Go to the *Setup* menu and change the decimal point to 1 decimal.
3. Go to the *Program – Scale* menu and press Enter until d.S 2 is shown on the Upper display.
4. Press Enter and change the display 2 value to 3558.4.
5. The meter is now displaying the volume in liters.

Note: The display can be scaled to display the volume in any engineering units.

Math Function (mt Fth)

The *Math* menu is used to select the math function that will determine the channel C value. These math functions are a combination of input channels A and B, and will display when channel C is selected in the *Display* menu.

The following math functions are available.

Function	Display	Description
Sunm	*Sum*	Channel C = (A+B+P)*F
Dif	*Difference*	Channel C = (A-B+P)*F
difabs	*Absolute difference*	Channel C = ((Absolute value of (A-B))+P)*F
Avg	*Average*	Channel C = (((A+B)/2)+P)*F
nmulti	*Multiplication*	Channel C = ((A*B)+P)*F
Divide	*Divide*	Channel C = ((A/B)+P)*F
Hi-ab	*Max of A or B*	C = ((High value of channel A or B)+P)*F
Lo-ab	*Min of A or B*	C = ((Low value of channel A or B)+P)*F
Drauw	*Draw*	Channel C = ((A/B)-1)*F
uwAvg	*Weighted avg.*	Channel C = ((B-A)*F)+A
ratio	*Ratio*	Channel C = (A/B)*F
Ratio2	*Ratio 2*	C = ((B-A)/A)+P)*F
Concen	*Concentration*	Channel C = (A/(A+B))*F

Math Constants (Const)

The *Math Constants* menu is used to set the constants used in channel C math. The math functions include input channel A and B, as well as the adder constant P, and factor constant F.

The *Adder* constant (P) may be set from -99.999 to 999.999.

The *Factor* constant (F) may be set from 0.001 to 999.999.

The chart on page 52 details the math functions that may be selected in the *Math Function* menu.

Low-Flow Cutoff (CutoFF)

The low-flow cutoff feature allows the meter to be programmed so that the often-unsteady output from a differential pressure transmitter, at low flow rates, always displays zero on the meter.

The cutoff value may be programmed from 0 to 999999. The meter will display zero below the cutoff value. Programming the cutoff value to zero disables the cutoff feature.

Analog Output Programming (AoutPr)

The *Analog Output Programming* menu is used to program the behavior of the 4-20 mA output. The following parameters and functions are programmed in this menu:

1. Source: Source for generating the 4-20 mA output
2. Overrange: Analog output value with display in overrange condition
3. Underrange: Analog output value with display in underrange condition
4. Break: Analog output value when loop break is detected
5. Max: Maximum analog output value allowed regardless of input
6. Min: Minimum analog output value allowed regardless of input
7. Calibrate: Calibrate the internal 4-20 mA source reference used to scale the 4-20 mA output

Analog Output Source

The analog output source can be based on either of the input channels (Ch-A, Ch-B), the math channel (Ch-C), maximum stored value of either input channel (Hi-A, Hi-B), minimum stored value of either input channel (Lo-A, Lo-B), relay set points, or the Modbus input.

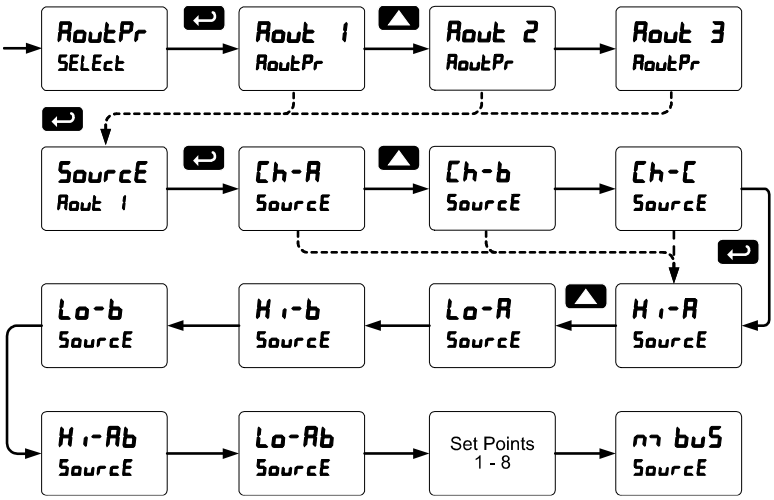

Analog Output Calibration

To perform the analog output calibration, it is recommended to use a milliamp meter with a resolution of at least 0.1 µA to measure the output current. The values saved internally during this procedure are used for scaling the 4-20 mA output in the *Setup* menu.

Programmable Function Keys User Menu (uSEr)

The *User* menu allows the user to assign the front panel function keys F1, F2, and F3, the digital input F4 (a digital input located on the signal input connector), and up to eight additional digital inputs to access most of the menus or to activate certain functions immediately (e.g. reset max & min, hold relay states, etc.). This allows the meter to be greatly customized for use in specialized applications.

Up to eight digital outputs can be assigned to a number of actions and functions executed by the meter (i.e. alarms, relay acknowledgement, reset max, min, or max & min, tare, and reset tare). The digital outputs can be used to trigger external alarms or lights to indicate these specific events.

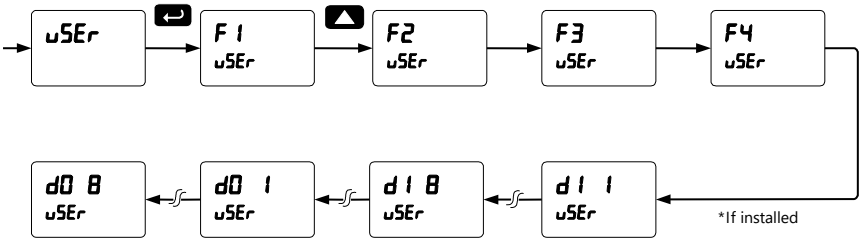

Function Keys & Digital I/O Available Settings

Refer to the following table for descriptions of each available function key or digital I/O setting.

Display	Description
Rst Hi	Reset the stored maximum display values for all channels
Rst Lo	Reset the stored minimum display values for all channels
Rst HL	Reset the stored maximum & minimum display values for all channels
Tare A	Capture tare and zero the display for channel A (A LED flashes – same rate as M)*
Tare B	Capture tare and zero the display for channel B (B LED flashes – same rate as M)*
Rst tr	Reset captured tare and resume normal operation for both channels A & B
relay	Directly access the relay menu
Set 1*	Directly access the set point menu for relay 1 (*through 8)
Rly d	Disable all relays until a button assigned to *enable relays* (**Rly E**) is pressed
Rly E	Enable all relays to function as they have been programmed
O Hold	Hold current relay states and analog output as they are until a button assigned to *enable relays* (**Rly E**) is pressed
d Hold	Hold the current display value, relay states, and analog output momentarily while the function key or digital input is active. The process value will continue to be calculated in the background.
D AbC	Scrolls values for A, B & C when activated. Keeps the last value for 10 seconds and then it returns to its assignment. Values are displayed on display line 1 and the corresponding channel and units on display line 2.
Ln1 Hi	Display maximum channel A display value on line 1

Display	Description
Ln1 Lo	Display minimum channel A display value on line 1
Ln1 HL	Display maximum & minimum channel A display values on line 1
Ln2 Hi	Display maximum channel B display value on line 2
Ln2 Lo	Display minimum Channel B display value on line 2
Ln2 HL	Display maximum & minimum channel B display values on line 2
LitHLC	Display maximum channel C display value on line 2
Ln2 HC	Display minimum channel C display value on line 2
Ln2 HC	Display maximum & minimum channel C display values on line 2
F On 1*	Force relay 1 (*through 4) into the on state. This function is used in conjunction with a digital input to achieve interlock functionality. See page 43 for details about interlock relays.
Contrl	Directly access the control menu
disabl	Disable the selected function key or digital I/O
AcH	Acknowledge all active relays that are in a manual operation mode such as auto-manual or latching
Reset	Directly access the reset menu
nmenu	Mimic the menu button functionality (digital inputs only)
rigHt	Mimic the right arrow/F1 button functionality (digital inputs only)
up	Mimic the up arrow/F2 button functionality (digital inputs only)
Enter	Mimic the enter/F3 button functionality (digital inputs only)
Alnm 1*	Provide indication when alarm 1 (*through 8) has been triggered (digital outputs only)

* If math functions are displayed, the math function indicator LED “C” will flash when either A or B channel is using a tare value (net value).

Tare (tare A, tare B)

The tare function zero's out the display. In the case of scale weight, tare is used to eliminate container weight and provide net weight readings. There are two tare functions; Capture Tare for channel A and B, and Reset Tare. Display channel indicator letter flashes when a tare is used. It will flash until the tare is reset.

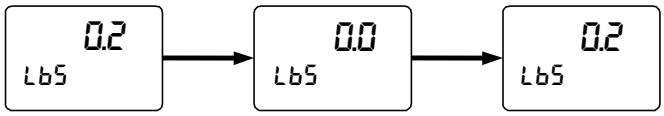

Before tare | After capture tare | After reset tare

Gross (without tare) and net (with tare) values can be viewed simultaneously. See page 32.

Internal Calibration (ICAL)

The meter is factory calibrated prior to shipment to read in milliamps and volts depending on the input selection. The calibration equipment is traceable to NIST standards.

The use of calibrated signal sources is necessary to perform the internal calibration of the meter.

Check calibration of the meter at least every 12 months. Each input and input type must be recalibrated separately.

Notes:

1. *If meter is in operation and it is intended to accept only one input type (e.g. 4-20 mA), recalibration of other input is not necessary.*
2. *Allow the meter to warm up for at least 15 minutes before performing the internal calibration procedure.*

The *Internal calibration* menu is part of the *Advanced Features* menu.

1. Press and hold the Menu button for three seconds to access the advanced features of the meter.
2. Press the Up arrow button to scroll to the *Internal calibration* menu (ICAL) and press Enter.
3. Select channel A (Ch-A) or channel B (Ch-b) and press enter.
4. The meter displays either current calibration (C CAL) or voltage calibration (U CAL), according to the input setup. Press Enter to start the calibration process.

   Example of *Internal Calibration* for current input:

5. The meter displays *low* input current message (C Lo). Apply the low input signal and press Enter. The display flashes for a moment while the meter is accepting the low input signal.
6. After the display stops flashing, a number is displayed with the leftmost digit brighter than the rest. The bright digit is the active digit that can be changed by pressing the Up arrow button. Press the Right arrow button to move to the next digit.
7. Set the display value to correspond to the input signal being calibrated, typically 4.000 mA.
8. The display moves to the *high* input calibration (C Hi). Apply the high input signal and press Enter.
9. Set the display for the high input calibration, in the same way as it was set for the low input calibration, typically 20.000 mA.

The graphic shows the calibration of the current input. The voltage input is calibrated in a similar way.

Tips:

- Low and high input signals can be any valid values within the range of the meter.
- Observe minimum input span requirements between input 1 and input 2.
- Low input should be less than high input signal.

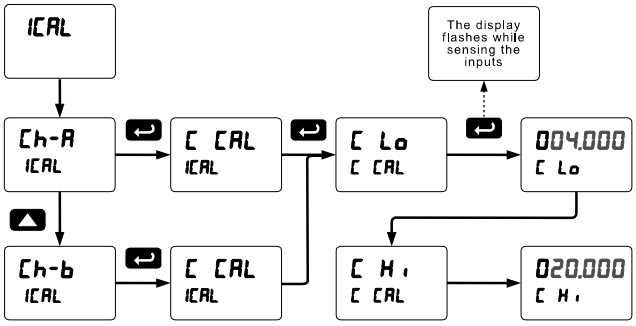

Error Message (Error)

An error message indicates that the calibration or scaling process was not successful.

After the error message is displayed, the meter reverts to input 2 during calibration or scaling and to input 1 during internal calibration, allowing the appropriate input signal to be applied or programmed.

The error message might be caused by any of the following conditions:

1. Input signal is not connected to the proper terminals, or it is connected backwards.
2. Wrong signal selection in *Setup* menu.
3. Minimum input span requirements not maintained.

Minimum Input Span

The minimum input span is the minimum difference between input 1 and input 2 signals required to complete the calibration or scaling of the meter.

Input Range	Input 1 & Input 2 Span
4-20 mA	0.15 mA
±10 VDC	0.01 VDC

Meter Operation

The meter is capable of accepting two input channels (A and B) of either current (0-20 mA, 4-20 mA) or voltage signals (0-5 V, 1-5 V, 0-10 V, ± 10 V) and displaying these signals in engineering units from -99999 to 999999 (*e.g.* a 4-20 mA signal could be displayed as -50.000 to 50.000).

A math function channel (C) is available to perform operations on channel A and B, with adder and factor constants, and display the results. Engineering units or tags may be displayed with these three channels.

The dual-line display can be customized by the user. Typically, the upper display is used to display the math channel C, while the lower display is used to alternate between displaying input channels A and B.

Additionally, the meter can be set up to display any input or math channel on the upper display and a unit or tag on the lower display. The relays and analog output can be programmed to operate based on any input or math channel.

Front Panel Buttons Operation

Button Symbol	Description
or	Press to enter or exit Programming Mode, view settings, or exit max/min readings
or	Press to reset max/min readings or other parameter/function assigned through the *User* menu
or	Press to display max/min readings for channel A or other parameter/function assigned through the *User* menu
or	Press to acknowledge relays or other parameters/function assigned through the *User* menu

SafeTouch® Buttons

The ProtEX-MAX is equipped with four sensors that operate as through-glass buttons so that it can be programmed and operated without removing the cover (and exposing the electronics) in a hazardous area.

These buttons can be disabled for security by selecting DISABLE on the switch labeled NO-CONTACT BUTTONS located on the connector board.

To actuate a button, press one finger to the glass directly over the marked button area. Then retract finger more than three inches from the glass before pressing the next button. When the cover is removed, the four mechanical buttons located next to the sensors are used. The sensors are disabled when a mechanical button is pressed and will automatically be re-enabled after 60 seconds of inactivity.

The SafeTouch Buttons are designed to filter normal levels of ambient interference and to protect against false triggering, however, it is recommended that the SafeTouch Buttons be disabled (slide switch to LOCK) if there is an infrared interference source in line-of-sight to the display.

The SafeTouch Buttons are configured by default to duplicate the function of the front panel mechanical pushbuttons associated with the integrated meter. The symbols by each SafeTouch button correspond to a mechanical button as shown in the above table.

SafeTouch Button Tips:

- To the extent possible, install the display facing away from sunlight, windows, reflective objects and any sources of infrared interference.
- Keep the glass window clean.
- Tighten the cover securely.
- Use a password to prevent tampering.

WARNING

Take caution when cleaning the window glass as it may result in unintentional SafeTouch button events. Only clean the ProtEX-MAX when the system is safely shut down, and inspect the ProtEX-MAX for proper configuration prior to system restart.

F4 Operation

A digital input, F4, is standard on the meter. This digital input is programmed identically to function keys F1, F2, and F3. The input is triggered with a contact closure to COM, or with an active low signal. During operation, F4 operates according to the way is has been programmed in the *Advanced Features – User* menu.

Maximum/Minimum Readings

The max & min readings (peak & valley) reached by the process can be displayed either continuously or momentary:

1. Display briefly by assigning to the F1-F3 function keys or to the digital inputs in the *User* menu.
2. Display continuously by assigning either display to max/min through the *Display* menu.

Any of the F1-F3 function keys (buttons) and the digital inputs can be programmed to reset the max & min readings. The meters are set at the factory to display the max reading by pressing the Up arrow/F2 button and to use the Right arrow/F1 button to access the *Reset* menu.

To display max and min channel A reading using function key with factory defaults:

1. Press Up arrow/F2 button to display minimum reading of channel A since the last reset/power-up. The display will then display the maximum reading of channel A since the last reset/power-up.
2. Press the Up arrow/F2 button again to display the minimum reading of channel A since the last reset/power up.
3. To reset max/min press Right arrow/F1 button to access the Reset menu. The max & min displays are reset to actual values.
4. Press Menu to exit max/min display reading.

Troubleshooting

The rugged design and the user-friendly interface of the meter should make it unusual for the installer or operator to refer to this section of the manual. However, due to the many features and functions of the meter, it's possible that the setup of the meter does not agree with what an operator expects to see.

If the meter is not working as expected, refer to the *Diagnostics* menu and recommendations below.

Diagnostics Menu (d iAG)

The *Diagnostics* menu is located in the *Advanced Features* menu, to access *Diagnostics* menu see *Advanced Features Menu*, page 46.

This menu allows the user to test the functionality of all the meter LEDs, check the meter's software and version information, and erase the MeterView Pro software installation files from the meter. Press the Enter button to view the settings and the Menu button to exit at any time.

For a description of the diagnostic messages, *see Advanced Features Menu &* Display Messages, page 46.

Determining Software Version

To determine the software version of a meter:

1. Go to the *Diagnostics* menu (d iAG) and press Enter button.
2. Press Up arrow button and scroll to Information menu (InFo).
3. Press Enter to access the software number (SFt) and version (UEr) information. Write down the information as it is displayed. Continue pressing Enter until all the information is displayed.
4. The meter returns to Run Mode after displaying all the settings.

Reset Meter to Factory Defaults

When the parameters have been changed in a way that is difficult to determine what's happening, it might be better to start the setup process from the factory defaults.

Instructions to load factory defaults:

1. Enter the *Advanced Features* menu. See *Advanced Features Menu*, page 46.
2. Press Up arrow to go to *Diagnostics* menu
3. Press and hold Right arrow for three seconds, press Enter when display flashes rESEt.
   Note: If Enter is not pressed within three seconds, the display returns to Run Mode.
4. The meter goes through an initialization sequence (similar as on power-up), and loads the factory default settings.

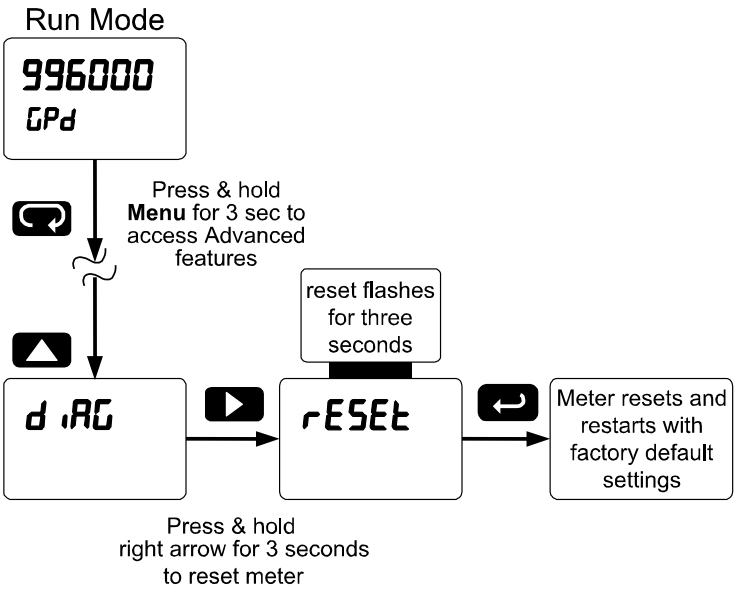

Factory Defaults & User Settings

The following table shows the factory setting for most of the programmable parameters on the meter.

Parameter	Display	Default Setting
Input type	InPut	
Input type, channel A	Ch-A	4-20 mA
Input type, channel B	Ch-b	4-20 mA
Unit	unit	
Unit, channel A	Ch-A	mA-A
Unit, channel B	Ch-b	mA-b
Unit, channel C	Ch-C	mA-C
Number of points	no PtS	
Number of points, ch A	Ch-A	2
Number of points, ch B	Ch-b	2
Scaling, (channel A)	ScAL A	
Input 1, channel A	InP 1	4.000 mA
Display 1, channel A	dis 1	4.000
Input 2, channel A	InP 2	20.000 mA
Display 2, channel A	dis 2	20.000
Scaling (channel B)	ScAL b	
Input 1, channel B	InP 1	4.000 mA
Display 1, channel B	dis 1	4.000
Input 2, channel B	InP 2	20.000 mA
Display 2, channel B	dis 2	20.000
Math, channel C	Sum	Sum
Adder (constant P)	AddEr	0.000
Factor (constant F)	FActor	1
Filter	FiLtEr	
Filter, channel A	Ch-A	70
Filter, channel B	Ch-b	70
Bypass, channel A	byPASS	0.2
Bypass, channel B	byPASS	0.2
Round	round	1
Cutoff	CutoFF	
Cutoff value, channel A	Ch-A	0.000 (disabled)
Cutoff value, channel B	Ch-b	0.000 (disabled)
Display assignment	dSPLAY	
Display line 1	d Ch-A	Channel A
Display line 2	d Ch-b	Channel B
Display intensity	d- Inty	8
Relay 1 assignment	Ch-A	Channel A
Relay 1 action	Act 1	Automatic
Relay 1 set point	SEt 1	1.000
Relay 1 reset point	rSt 1	0.500
Relay 2 assignment	Ch-A	Channel A

Parameter	Display	Default Setting
Relay 2 action	Act 2	Automatic
Relay 2 set point	SEt 2	2.000
Relay 2 reset point	rSt 2	1.500
Relay 3 assignment	Ch-A	Channel A
Relay 3 action	Act 3	Automatic
Relay 3 set point	SEt 3	3.000
Relay 3 reset point	rSt 3	2.500
Relay 4 assignment	Ch-A	Channel A
Relay 4 action	Act 4	Automatic
Relay 4 set point	SEt 4	4.000
Relay 4 reset point	rSt 4	3.500
Fail-safe relay 1	FLS 1	Off
Fail-safe relay 2	FLS 2	Off
Fail-safe relay 3	FLS 3	Off
Fail-safe relay 4	FLS 4	Off
On delay relay 1	On 1	0.0 sec
Off delay relay 1	OFF 1	0.0 sec
On delay relay 2	On 2	0.0 sec
Off delay relay 2	OFF 2	0.0 sec
On delay relay 3	On 3	0.0 sec
Off delay relay 3	OFF 3	0.0 sec
On delay relay 4	On 4	0.0 sec
Off delay relay 4	OFF 4	0.0 sec
Loop break relay 1	iGnorE	Ignore
Loop break relay 2	iGnorE	Ignore
Loop break relay 3	iGnorE	Ignore
Loop break relay 4	iGnorE	Ignore
Display 1 analog out	dis 1	4.000
Output 1 value	Out 1	4.000 mA
Display 2 analog out	dis 2	20.000
Output 2 value	Out 2	20.000 mA
Source analog output	SourcE	Channel A
Overrange output	O-rAnG	21.000 mA
Underrange output	u-rAnG	3.000 mA
Loop break output	brEAK	3.000 mA
Maximum output	m AH	23.000 mA
Minimum output	m in	3.000 mA
Slave ID (Address)	SLAU Id	247
Baud rate	bAud	9600
Transmit delay	tr dLY	50 ms
Parity	PAr ity	Even

Parameter	Display	Default Setting
Byte-to-byte timeout	t-byt	010 (0.1 sec)
F1 function key	F1	Reset max & min
F2 function key	F2	Upper Max & Min
F3 function key	F3	Acknowledge relays
F4 function (digital input)	F4	Acknowledge relays
Digital input 1	di 1	Menu
Digital input 2	di 2	Right arrow
Digital input 3	di 3	Up arrow

Parameter	Display	Default Setting
Digital input 4	di 4	Enter
Digital output 1	dO 1	Alarm 1
Digital output 2	dO 2	Alarm 2
Digital output 3	dO 3	Alarm 3
Digital output 4	dO 4	Alarm 4
Password 1	PASS 1	000000 (unlocked)
Password 2	PASS 2	000000 (unlocked)
Password 3	PASS 3	000000 (unlocked)

Troubleshooting Tips

Symptom	Check/Action
SafeTouch buttons do not respond	If mechanical button was pushed. The SafeTouch buttons will be re-enabled automatically **60 seconds** after the last button push. If slide switch on connector board is in DISABLE position, switch to ENABLE. Strong direct sunlight may interfere with SafeTouch button operation. It is recommended to operate the buttons by standing so as to block direct sunlight.
Serial Communications Power LED Indicator is off	1. Check modular cable connection 2. Check power to the device
If only the TX (or DATA IN) data status LED is flashing when serial communications attempted	1. Check serial cable 2. Check protocol selected on device 3. Check instrument address & baud rate **4.** Check program address & baud rate
If both data status LEDs (TX and RX) are off when trying to communicate	Remove all unnecessary cables and instruments from the bus. Try getting the system to work with only one device (to ease troubleshooting) and then expand the system one device at a time.
Communications slow	Increase the baud rate
Random communication errors	1. Increase the TX delay time 2. Decrease the baud rate
Power LED is off	1. Check modular cable connection 2. Check power to instrument
No display at all	Check power at power connector
Not able to change setup or programming, Locd is displayed	Meter is password-protected, enter correct six-digit password to unlock
Meter displays error message during calibration (Error)	1. Check signal connections 2. Check input selected in *Setup* menu 3. Check minimum input span requirements
Meter displays 1. 999999 2. -99999	1. Check input selected in *Setup* menu 2. Check corresponding signal at Signal connector
Display is unstable	1. Check input signal stability and value 2. Check display scaling vs. input signal 3. Check filter and bypass values (increase)
Display response is too slow	Check filter and bypass values
Display reading is not accurate	1. Check signal input conditioner selected: Linear, square root, etc. 2. Check scaling or calibration
Display does not respond to input changes, reading a fixed number	Check display assignment, it might be displaying max, min, or set point.
Display alternates between 1. Hi and a number 2. Lo and a number	Press Menu to exit max/min display readings.
Relay operation is reversed	1. Check fail-safe in *Setup* menu 2. Check wiring of relay contacts
Relay and status LED do not respond to signal	1. Check relay action in *Setup* menu 2. Check set and reset points
Flashing relay status LEDs	Relays in manual control mode or relay interlock switches opened.
If the display locks up or the meter does not respond at all	Cycle the power to reboot the microprocessor.
Other symptoms not described above	Call Technical Support for assistance.

Service

WARNINGS

- Installation and service should be performed only by trained service personnel. Service requiring replacement of internal sub-components must be performed at the factory.
- Disconnect from supply before opening enclosure. Keep cover tight while circuits are alive. Conduit seals must be installed within 18" (450mm) of the enclosure.
- Verify that the operating atmosphere of the instrument is consistent with the appropriate hazardous locations certifications.
- If the instrument is installed in a high voltage environment and a fault or installation error occurs, high voltage may be present on any lead
- Read all product labels completely and follow all instructions and requirements listed on the labels for installation or service.

If the enclosure is sound and undamaged, then only the internal electronics housing will need to be returned to the factory for service. Contact the factory for RMA number and return instructions.

Mounting Dimensions

All units: inches (mm)

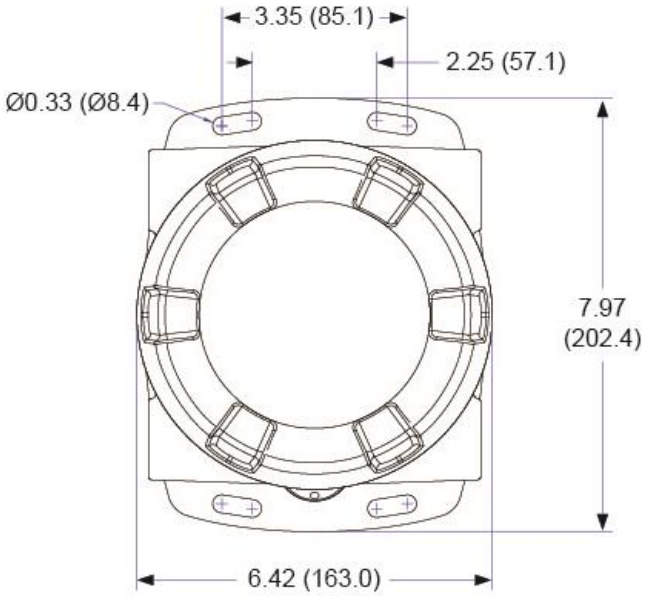

Figure 22: Enclosure Dimensions – Front View

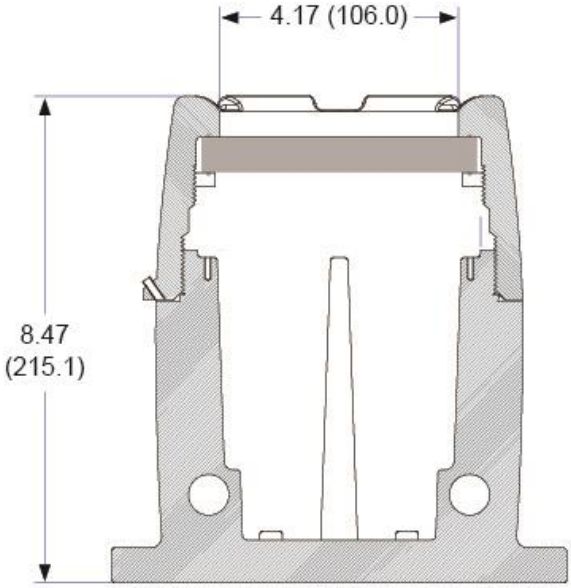

Figure 23: Enclosure Dimensions – Side Cross Section View

How to Contact Precision Digital

- For Technical Support please

  Call: (800) 610-5239 or (508) 655-7300

  Fax: (508) 655-8990

  Email: support@predig.com

- For Sales Support or to place an order please contact your local distributor or

  Call: (800) 343-1001 or (508) 655-7300

  Fax: (508) 655-8990

  Email: sales@predig.com

- For the latest version of this manual please visit

  www.predig.com

PRECISION DIGITAL CORPORATION
233 South Street • Hopkinton MA 01748 USA
Tel (800) 343-1001 • Fax (508) 655-8990

www.predig.com

LIM8-6060_E
SFT065 Ver 4.010 & up
2/22