# Operating Manual



PT-ST2 - Pressure Transmitter Standard

## PT-ST2

## *Content*


| | | |
|---|---|---|
| 1 | General (Information, Signs, Abbreviations) | 3 |
| 2 | Transport, Packaging, Storage | 3 |
| 3 | Safety Instructions | 5 |
| 4 | Start-Up, Operation | 7 |
| 4.1 | Function | 7 |
| 4.2 | Before Mounting | 7 |
| 4.3 | Product Label | 7 |
| 4.4 | Mounting | 7 |
| 4.5 | Electrical Start-Up | 10 |
| 4.6 | Electrical Connection | 12 |
| 4.7 | Function Test | 14 |
| 5 | Fault Recovery | 14 |
| 6 | Maintenance, Dismounting, Return, Cleaning, Disposal | 16 |
| 7 | Technical Data | 17 |
| 8 | Dimensions | 22 |
| 9 | Application as Component of a Safety Function | 24 |
| 9.1 | Norms and Abbreviations | 24 |
| 9.2 | Pressure Ranges | 24 |
| 9.3 | Product Label for Usage as Component of a Safety Function | 25 |
| 9.4 | Electrical Connection for Usage as Component of a Safety Function | 25 |
| 9.5 | Safety Function and Diagnosis | 27 |
| 9.6 | Safety Parameters | 29 |
| 9.7 | Operating Parameters | 30 |
| 10 | Accessories | 32 |

# 1 General

## 1.1 Information

- This operating manual gives important handling instructions for the pressure transmitter PT-ST2. Compliance with all safety and handling instructions in this manual is a requirement for safe work.
- This operating manual must be read and understood by qualified personnel before mounting and start-up of the sensor.
- This operating manual is part of the product. Please keep this manual at a place accessible for all users and on-site.
- Please comply with the local regulations and safety instructions for the PT-ST2s field of application.
- If the serial number on the product label becomes illegible (e. g. through mechanical damage), traceability can not be ensured.
- The pressure measuring transmitter PT-ST2 described in this manual is carefully designed and manufactured using state-of-the-art technology. Every component undergoes strict quality inspection in all stages of manufacture.
- The manufacturer's liability is void in the case of any damage caused by using the product contrary to its intended use, non-compliance with these operating instructions, unauthorised modifications to the PT-ST2 or assignment of insufficiently qualified skilled personnel.

## 1.2 Signs and Abbreviations




**Warning!**
Non-compliance can cause injuries to persons and/or the demolition of the device.
There can be a danger to life.



**Attention!**
Non-compliance can cause faulty device operation or lead to property damage.



**Information!**
Non-compliance can influence device operation or cause unintentional reactions.




**Danger!**
Failure to comply to the safety instructions risks serious or fatal injury caused by electrical power.




**Warning!**
Possible dangerous situations caused by hot surfaces or liquids, which can lead to burns. Please avoid hot surfaces and liquids.

# 2 Transport, Packaging, Storage

## 2.1 Transport

Check the device for any damage that may have been caused during transportation. Report obvious damage at once.

## 2.2 Packaging

Do not remove packaging until just before mounting. Keep the packaging, as it will provide optimum protection during transport (e.g. change in installation site, returns).

## 2.3 Storage




**Warning!**
Please remove all rest media before storing the device after operation. This is especially important if the media are hazardous materials. Examples for hazardous materials: Corrosive, toxic, radioactive media and carcinogens.



Please observe permissible environmental conditions, see page 18-19.

During long-term storage please avoid:

- Direct sunlight or close proximity to hot objects and surfaces
- Mechanical vibration, mechanical shock (e. g. by rough setup)
- Soot, steam, dust and corrosive gases
- Humid or wet environments
- Hazardous areas, flammable atmospheres

If possible, store the device in its original packaging or an equivalent one

# 3 Safety Instructions

Warning

Before mounting, start-up and operation please select the correct pressure transmitter in terms of function and assembly.
**Non-compliance can cause heavy injuries and/or damage!**

Warning

**Please open the process connections only when unpressurized.**
Attention: Please comply with the performance parameters as per chapter 7 *Technical Data*.
In case of usage as component of a safety function: Please comply with chapter 9, too.

Warning

**The overpressure limit can not be exceeded, not even when errors occur.** Loads above the overpressure limit can cause measurement errors inside the output signal. The safety function will be impaired.

You can find further important safety instructions in the individual chapters.

## 3.1 Intended Use

The PT-ST2 is designed only for the intended use as described here and may only be used as intended.

The technical specifications as described in this operating manual are mandatory. Inappropriate handling or operating the device outside of its technical specifications makes an immediate shutdown and inspection by the manufacturer mandatory.

When the device is transported from a cold into a warm environment, condensation can cause a device malfunction. Wait for device temperature and room temperature to equalize before putting the PT-ST2 back into operation.

The manufacturer shall not be liable for claims of any kind based on operation contrary to the intended use.

## 3.2 Personnel Qualification

Warning

**Risk of injury if qualification is insufficient**

Improper handling can lead to considerable property damage and injury.

- The required tasks as described in this operating manual should only be conducted by qualified personnel with qualifications as follows.
- Keep unqualified personnel away from hazardous areas.

For mounting and start-up of the PT-ST2 the personnel has to be familiar with the relevant regulations and directives of the country and must have the required qualification. They must have knowledge on measurement and control technology, have to be acquainted with electric circuits, have to be capable of carrying out the work described and have to be able to independently recognise potential hazards. Depending on the operational conditions they need to have the corresponding knowledge, e.g. of corrosive media.

## 3.3 Special Hazards




Please comply with existing codes and regulations of your country (e. g. norms). Additionally for special applications, please comply with the applicable norms and directives.
**Non-compliance with appropriate regulations can cause heavy injuries and property damage!**




Use of hazardous measurement materials like e. g. oxygen, acetylene, flammable or toxic substances, or use of refrigerating systems, compressors etc. requires compliance beyond the general regulations. In this case, compliance with applicable special regulations is necessary.




Rest media in dismounted pressure transmitters can be hazardous to persons, the environment and the installation. Use sufficient safety measures!




Electrostatic discharge (ESD) protection is required.
The proper use of grounded worktops and personal wristbands is required when working with open circuits (PCBs) to prevent damage to sensitive electronic components caused by electrostatic discharge.




Danger to life due to electric current. If live parts are touched, there is an immediate danger of death.

Installation and mounting of electrical equipment may only be carried out by qualified electricians.

Operation with a defective power supply unit (e. g. short-circuit from mains voltage to output voltage) can cause life-threatening voltages on the unit.

# 4 Start-Up, Operation

## 4.1 Function

The PT-ST2 has a pressure connection with internal membrane. With the help of the sensor element and auxiliary energy, an applied pressure deforming the membrane is converted into an electrical standard signal. This signal changes proportional to the pressure and can be further processed.

Pressure surges below the nominal pressure and duration less than 1 ms can cause measuring errors in the output signal and thus impair the safety function. To reduce pressure surges, optional channel bores with smaller diameter are available. The reduced diameter must be suitable for the particle size of the medium.

See product label for the permissible pressure range of the pressure transmitter.
When used as part of a safety function, see also chapter 9.

## 4.2 Before Mounting

- Check if a fully assembled PT-ST2 has been supplied.
- Inspect the sensor for potential damage accrued during transportation. If such damage exists, inform the transport company and supplier immediately.
- Keep the packaging, as it provides optimum protection during transport.
- Make sure that the connection contacts are not damaged.

Warning

It is essential to read the operating instructions before mounting and start-up of the device!

## 4.3 Product Label (Example)

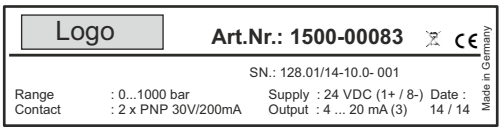


Art.No.: Article number

SN : Serial number

## 4.4 Mounting

Avoid brute mechanical force on the sensing head, as this can lead to destruction of the instrument.

- Check the delivery for completeness and visible defects immediately after receiving the device.
- If parts are missing or if you detect visible defects, inform the transport company and the supplier immediately.

## 4.4 Mounting (Continued)

Use original accessories only!

- For accessories see chapter 10 or data sheet PT-ST2

### 4.4.1 Sealing Process Connection

Warnung

**Risk of Burns!**
The cooling stretch can be hot from previous use.
Allow the cooling stretch time to cool down first!

Before sealing, check the sealing surfaces on the instrument and at the measuring point for damage and dirt.

If damage is detected, please do not conduct a start-up!

If dirt is detected, please remove dirt first! (see chapter 6.4)

**Sealing of process connections with parallel threads**

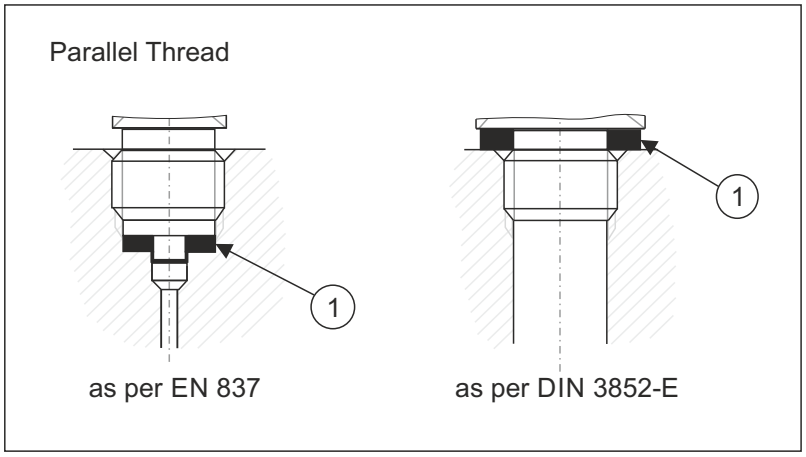


Use flat seals, sealing lenses or MIE profiled seals on sealing surface 1 to seal the process connection.

For a possible selection of seals, see chapter 10.

**Sealing of process connections of taper threads**

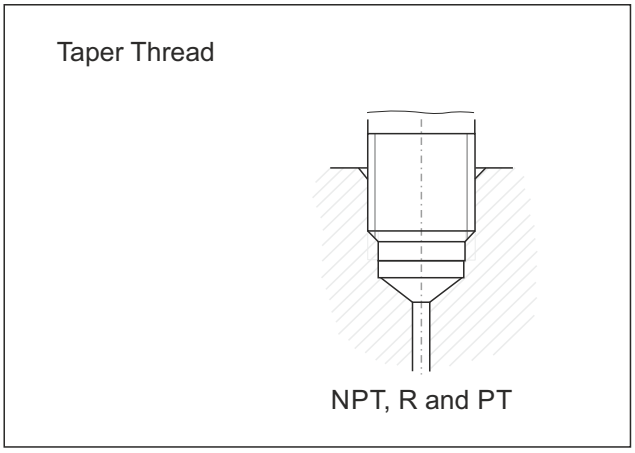


The sealing of process connections with taper threads takes place inside the thread and with additional sealing materials. Potential sealing materials are for example PFTE-tape as per EN 837-2.

The threads are self-sealing.

### 4.4.2 Mounting Process Connection

Warning

**Risk of Burns!**
The cooling stretch can be hot from previous use.
Allow the cooling stretch time to cool down first!

Tools: Open-end wrench SW27, screwdriver

PT-ST2 without cooling stretch

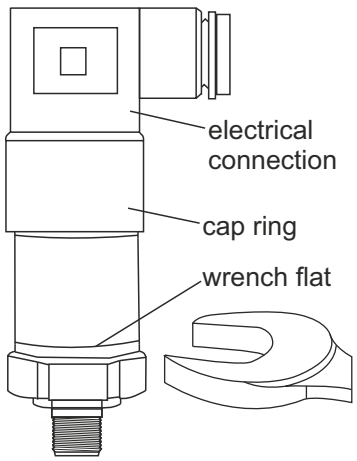


Mounting cooling stretch

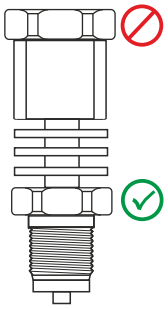

- Seal the process connection before mounting.
  Please comply with chapter 4.4.1 for correct sealing.
- Please use only suitable tools for mounting.
- Please comply with the prescribed torque[1]
  before mounting.
- Do not use casing or cap ring as
  working surface when mounting.
- Screw-in the PT-ST2 sensor only over the provided
  wrench flats.
- Use lower hexagon for tightening if
  cooling stretch is present. (See Mounting Cooling Stretch)
- Do not tilt the threads when screwing in.
- Do not insulate the cooling stretch! To ensure heat dissiatipation,
  the cooling stretch must not be insulated.
- When mounting overhead, make sure that water
  can't gather on the top of the unit, at the electrical connection
  and cap ring. Water can close the
  pressure compensation membrane.
- If necessary, please comply with information on female threads and
  welding sockets.

[1]The correct torque is dependent on process connection dimension
and employed seal.
(form/material).

For further information to process connections see data sheet PT-ST2.

### 4.4.3 Zero Point Adjustment

The manual zero point adjustment described here corresponds to zero point adjustment option 2. This option is not possible for all electrical connection variants.

Before using this chapter, please check whether your electrical connection variant allows manual zero adjustment.

(For more information about zero point adjustment, see data sheet PT-ST2.)

| 1: Detach | 2: Adjust |
|---|---|
| 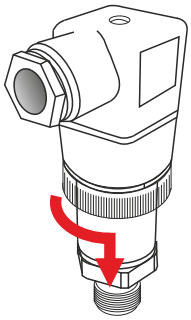 | 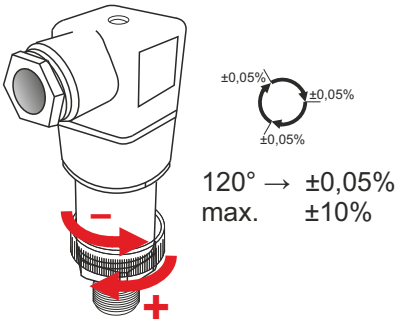  |

| 3: Tighten | 4: Check for correct fit |
|---|---|
| 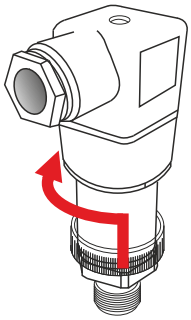 | 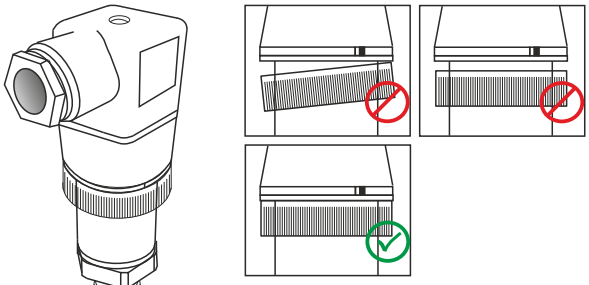 |

## 4.5 Electrical Start-Up

### 4.5.2 Electrical Mounting

Warning

The device shielding does not serve as a protective conductor for personal protection, but as a functional earth to shield the device against electromagnetic fields.

Use original accessories only. For accessories see chapter 10 or data sheet PT-ST2.

### 4.5.2 Connection Assembly




**Danger due to electric shock!** Only carry out electrical installation at dead voltage condition.

**Damage to property due to electrostatic charge!**
Comply with safety instructions as per DIN EN 61340-51/-3 to avoid a build-up of electrostatic charge!

Work on the electronics may only be carried out by qualified personnel.

- Use a shielded cable for devices with ratiometric output signal. Ground the cable shield, if the cable is longer than 30 m or leaves the building.

- Use a cable with suitable properties for the respective application conditions.

- Attach a strain relief to cable versions.

- Ventilate cables with ventilation tubes against atmosphere.

- Ground the device via the process connection.

- Select the cable diameter suitable for the cable bushing of the connector. Make sure that the cable gland of the mounted plug is fitting correctly and that the seals are present and not damaged.

- Tighten the screw connection and check the correct fit of the seals to ensure the protection class.

- For cable outlets, make sure that no moisture enters at the end of the cable.

- See 4.6 *Electrical Connection* for terminal assignment.

### 4.5.3 Setting Up Voltage Supply

Voltage supply is provided by power supplies or control units with energy limitation.

Supply of the pressure transmitter has to be done by an energy-limited circuit as per 9.4 of the UL/EN/IEC 61010-1 or LPS as per UL/EN/IEC 60950-1 or class 2 as per UL1310/UL1585 (NEC or CEC).

The power supply has to be suitable for operation above 2,000 m if the pressure transmitter is used from this height.

## 4.6 Electrical Connection

### Round plug M12x1, 4-pole

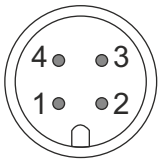


| | 2-wire | 3-wire |
|---|---|---|
| U+ | 1 | 1 |
| U- | 3 | 3 |
| SIG+ | | 4 |
| Shield | casing | casing |

Option: On-site zero point adjustment
Delivery: Without mating plugs
Protection class: IP67
Temperature: -30...+100 °C
Shield: Is optional

### Round plug M12x1, 4-pole metal

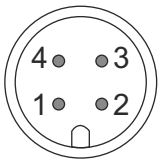


| | 2-wire | 3-wire |
|---|---|---|
| U+ | 1 | 1 |
| U- | 3 | 3 |
| SIG+ | | 4 |
| Shield | casing | casing |

Delivery: Without mating plugs
Protection class: IP67
Temperature: -40...+125 °C
Shield: Is optional

### Right angle plug DIN 175301-803 A (valve plug)

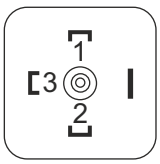


| | 2-wire | 3-wire |
|---|---|---|
| U+ | 1 | 1 |
| U- | 2 | 2 |
| SIG+ | | 3 |
| Shield | 4 | 4 |

Option: On-site zero point adjustment
Delivery: Without mating plugs
Protection class: IP65
Temperature: -30...+100 °C
Shield: Is optional

### Right angle plug DIN 175301-803 C (valve plug)

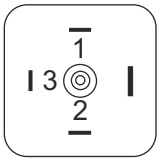


| | 2-wire | 3-wire |
|---|---|---|
| U+ | 1 | 1 |
| U- | 2 | 2 |
| SIG+ | | 3 |
| Shield | 4 | 4 |

Option: On-site zero point adjustment
Delivery: Without mating plugs
Protection class: IP65
Temperature: -30...+100 °C
Shield: Is optional

### Heavy Duty Connector

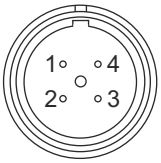


| | 2-wire | 3-wire |
|---|---|---|
| U+ | 1 | 1 |
| U- | 2 | 2 |
| SIG+ | | 3 |
| Shield | casing | casing |

Delivery: Without mating plugs
Protection class: IP68
Temperature: -40...+125 °C

### Bajonett plug, 6-pole

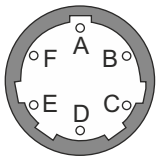


| | 2-wire | 3-wire |
|---|---|---|
| U+ | A | A |
| U- | B | B |
| SIG+ | | C |
| Shield | casing | casing |

Delivery: Without mating plugs
Protection class: IP67
Temperature: -40...+125 °C

## 4.6 Electrical Connection (Continued)

Field housing

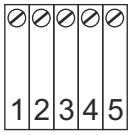


| | 2-wire | 3-wire |
|---|---|---|
| U+ | 1 | 1 |
| U- | 2 | 2 |
| SIG+ | | 3 |
| Shield | 5 | 5 |

Protection class: IP6K9K
Temperature: -25...+100 °C
Cable-Ø: 7...13 mm

Cable outlet connection colors

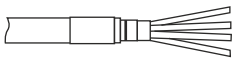

| | 2-wire | 3-wire |
|---|---|---|
| U+ | brown | brown |
| U- | blue | blue |
| SIG+ | | black |
| Shield | grey | grey |

Shield: Option for IP67
Option for 1/2NPT conduit

Cable outlet variants

| Cable outlet | Protection | Wires | Cable-Ø | Material | Temperature | Wire ends[1)] |
|---|---|---|---|---|---|---|
| IP67[2)] | IP67 | 3x0,34 mm² | 5,5 mm | PUR | -30...+100 °C | unassembled |
| 1/2NPT conduit | IP67 | 6x0,35 mm² | 6,1 mm | PUR | -30...+100 °C | ferrule |
| IP68 | IP68 | 6x0,35 mm² | 6,1 mm | PUR | -30...+125 °C | ferrule |
| IP68, FEP | IP68 | 6x0,39 mm² | 5,8 mm | FEP | -40...+125 °C | ferrule |
| IP6K9K | IP6K9K | 6x0,35 mm² | 6,1 mm | PUR | -30...+125 °C | ferrule |

1) Wire ends: Option for all variants: Wire ends tinned
Option 2 for cable outlet IP67: Wire end ferrules

2) Option: On-site zero point adjustment

Cable length: 2 m / 5 m / other lengths on request

More details about electrical connections

Connection designation:
U+: Positive supply connection
U-: Negative supply connection
SIG+: Analog output

With plug connection: The shown protection class is only valid in plugged condition with appropriate mating plugs.

Electrical safety measures (does not apply for ratiometric output)

| | |
|---|---|
| Short-circuit strength: | SIG+ against U- |
| Reverse voltage protection: | U+ against U- |
| Overvoltage resistance: | 40 VDC |
| Insulation voltage: | 750 VDC |

## 4.7 Function Test

The output signal must be proportional to the pressure. If this is not the case, this may be an indication of an incorrect mounting position or setting. In this event, please refer to chapter 5 *Fault Recovery*.

# 5 Fault Recovery

Warning

- Only the manufacturer is allowed to conduct repairs.

- Do not use pointed, sharp or hard objects for cleaning, or the electrical contacts may be damaged.
- Check in advance whether the correct voltage supply has been selected.

Warning

**Attention!**
If faults cannot be rectified using the measures listed here, immediately shut down the pressure transmitter and make sure that the device is depressurized or without a signal.

Protect the device against accidental start-up and contact the manufacturer.

If a return becomes necessary, please observe the instructions in chapter 6.3 *Return.*

| Fault | Possible Causes | Measures |
|---|---|---|
| Plastic has faded | UV-radiation | No measures required, discoloration is harmless |
| No output signal | Cable break | Check passage |
| | No / Wrong supply voltage | Correct supply voltage as per operating manual |
| No / Wrong output signal | Connection error | Check plug seat |
| Constant output signal at changing pressure | Mechanical overload by overpressure | Replace sensor / in case of repeated failure, contact manufacturer |
| Signal span too small / drops off | Mechanical overload by overpressure | Replace sensor / in case of repeated failure, contact manufacturer |
| | Membran damage / transmission medium is missing | Replace sensor / in case of repeated failure, contact manufacturer |
| | Seal / Sealing surface damaged or soiled. Seal doesn‘t fit, threads tilted | Clean seal / sealing surface, if necessary, replace seal |
| Output signal doesn‘t correspond to expectations | Pressure sensor not suitable or defect | Select suitable sensor or replace defect device |
| Signal span fluctuates / is imprecise | EMC interference in environment, e. g. converter | Shield sensor, shield cable, remove interference |
| | Too high / low operating temperatures | Comply with permissible temperatures as per operating manual |
| | Device not grounded | Ground device |
| | Pressure of process medium is fluctuating wildly | Dampen, consult with manufacturer |
| Zero point signal deviates | Too high / low operating temperatures | Comply with permissible temperatures as per operating manual |
| | Deviating fitting position | Correct zero point |
| | Overload limit exceeded | Reduce pressure |

Note: In case of unjustified complaints an additional charge is possible.

Check for correct mode of operation after every system change. If the fault persists, send the sensor in for repairs or exchange it.

In case of service needed: Clean devices before returning. See also chapter 6 for more details.

## 6 Maintenance, Dismounting, Return, Cleaning, Disposal

### 6.1 Maintenance

- The PT-ST2 pressure transmitter are maintenance-free.
- Only the manufacturer is allowed to conduct repairs.

Recalibration / DKD/DAkkS-certificate - official certificates:
If the instrument is used for hydrogen applications, calibration is required every 6 months.
The settings will then be corrected if necessary.

### 6.2 Dismounting




**Warning!**
There is a danger of leaking hot hazardous materials during dismounting.
Allow the device to cool down sufficiently before dismounting it!

Achieve dead-voltage and unpressurized condition on device. Remove electrical connections. Use chapter 4 in reverse. **Please comply with Safety Instructions!**

### 6.3 Return




Before returning a device, see chapter 6.4.

To return a device, us original packaging or similar.

To protect against damages, use anti-static foil, insulating material or identification as sensitive measurement equipment.

In addition, please mark the shipment as transport of a highly sensitive measuring instrument!

### 6.4 Cleaning

Clean the device regularly to prevent increased formation of dust on the device. Please keep the electrical contacts dry and clean!




Rest media in dismounted devices can be hazardous to persons, the environment and the installation.

Use sufficient safety measures!

Damage to property!
Abrasives or corrosive solvents can damage the contacts.

- Achieve dead-voltage and unpressurized condition before cleaning.
- Only clean the sensor body with a soft, damp cloth.
- Do not use pointed, sharp or hard objects for cleaning. The membrane of the process connection can be damaged.
- Clean the device to remove rest media before returning!

### 6.5 Disposal

Dispose of device components and packaging materials in an environmentally safe manner in accordance with country-specific waste treatment and disposal regulations.

Collect electrical and electronic parts separately. Separate metals and plastics. Dispose of printed circuit board assemblies professionally.

## Pressure Input

| | |
|---|---|
| Relative pressure: | 0...0,4 up to 0...1600 bar |
| Absolute pressure: | 0...0,4 up to 0...40 bar |
| Vacuum & ±ranges: | -0,4...0 up to -1...0 bar / -1...+0,6 up to -1...+59 bar |
| Ranges: | see table page 21 |
| Vacuum resistance: | available |

## Analog Output

| | | | |
|---|---|---|---|
| 4...20 mA, 20...4 mA: | 2-wire | Load: | ≤ (U+ - 7,5 V) / 0,023 A<br>≤ (U+ - 11,5 V) / 0,023 A (with settling time 1 ms) |
| 0...10 V, 10...0 V: | 3-wire | Load: | > 10 kΩ |
| 0...5 V, 1...5 V: | 3-wire | Load: | >5 kΩ |
| 0,5...4,5 V: | 3-wire | Load: | >4,5 kΩ |
| 1...6 V: | 3-wire | Load: | >6 kΩ |
| 0,5...4,5 V (ratiometric): | 3-wire | Load: | >4,5 kΩ |
| Option: | | | |
| Signal edge: | 4...20 mA: | Zero point: | 3,6 mA, 3,8 mA, 4 mA<br>(3,6 mA not combined with zero point adjustment) |
| | | Terminal value: | 20 mA, 21,5 mA, 23 mA |
| | 0...10 V: | Terminal value: | 10 V, 11,5 V |

## Response Time

Settling time per IEC 62594

| | | |
|---|---|---|
| Current (2-wire): | 3 ms (standard) | Option: 1 ms |
| Voltage (3-wire): | 2 ms (standard) | Option: 1 ms |
| Ratiometric (3-wire): | 2 ms (standard) | Option: 1 ms |
| Settling time: | 3 dB-limit frequency: | Standard: 500 Hz<br>1 ms: 1000 Hz |

Option: Signal damping

With current, voltage and ratiometric: 10 / 50 / 100 / 500 / 1000 / 5000 ms

| | |
|---|---|
| Activation time: | 150 ms |
| Activation drift: | 5 s (60 s with optional zero point adjustment 0,1%) |

## Accuracy

| | Non-linearity (as per IEC 61298-2) (in % of span) | | Accuracy at calibration temperature (in % of span) |
|---|---|---|---|
| | BFSL | Limit value adjustment | |
| Standard: | ≤ ±0,25% | ≤ ±0,5% | ≤ ±0,5% |
| Option 1: | ≤ ±0,5% | ≤ ±1% | ≤ ±1% |
| Option 2: | ≤ ±0,125% | ≤ ±0,25% | ≤ ±0,25% |
| | Option 2 only for output signal 4...20 mA and 0...10 V | | |

| | | |
|---|---|---|
| Calibration temperature: | Standard: | 15...25 °C |
| | Options: | 4 °C ±5 °C / 40 °C ±5 °C / 60 °C ±5 °C / 80 °C ±5 °C |
| Zero point adjustment: | Standard: | ≤ ±0,2% of span (factory setting) |
| | Option 1: | ≤ ±0,1% of span (factory setting)<br>Only with: Relative pressure, 4...20 mA, 0...10 V,<br>Calibration temperature standard |
| | Option 2: | ±10% of span (in steps of 0,05% adjustable by the customers)<br>Not available for all electric connections. |
| Dependence fitting position: | | For ranges <1 bar there is an additional zero point offset of up to 0,15% |
| Non-repeatability: | | ≤ ±0,1% of span |
| Temperature hysteresis: | | 0,1 % of span (>80 °C) |
| Long-term drift: | | ≤ ±0,1% of span<br>≤ ±0,2% of span for special measuring ranges and measuring ranges <1 bar |

Temperature error (for calibration temperature 15...25 °C):

For measurement ranges <1 bar, special measuring ranges and transmitters with heightened overload limit, the temperature error raises by 0,5% of span.

## Accuracy (Continued)

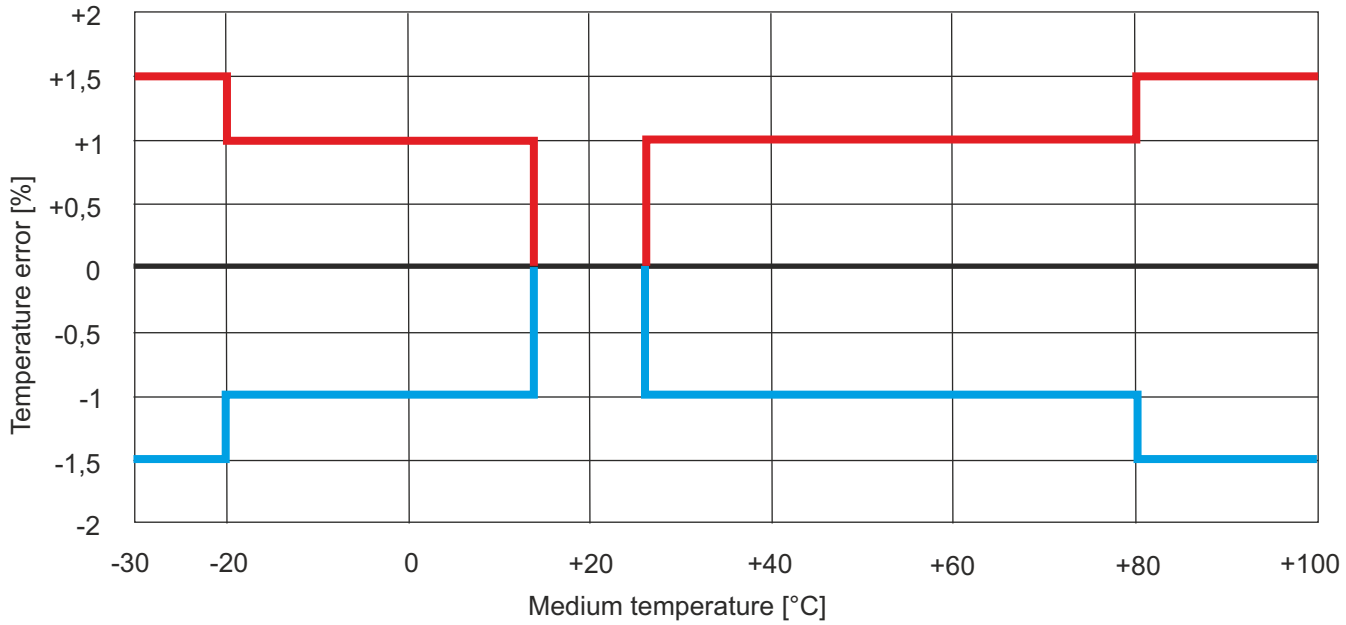


## Supply

| | | | |
|---|---|---|---|
| On output: | 4...20 mA / 20...4 mA / 0...5 V / 1...5 V / 0,5...4,5 V: | | 8...36 VDC |
| | 4...20 mA with optional settling time 1 ms: | | 12...36 VDC |
| | 0...10 V / 10...0V: | | 12...36 VDC |
| | 1...6 V: | | 9...36 VDC |
| | 0,5...4,5 V ratiometric: | | 5 VDC ±10% |
| Power loss: | Current output (2-wire): | 828 mW | (22 mW/K Derating of power loss at Environmental temperature ≥ 100 °C) |
| | Voltage output (3-wire): | 432 mW | |
| Current consumption: | Current output (2-wire): | 25 mA maximum | |
| | Voltage output (3-wire): | 12 mA maximum | |

## Environmental Conditions

Temperature ranges:

Medium and environmental temperatures can change depending on process connection sealing and electrical connection.

| | | | | |
|---|---|---|---|---|
| Standard: | Medium: -30...+100 °C | Environment: | -30...+100 °C | |
| Option: | Medium: -40...+125 °C | Environment: | -40...+125 °C | |

Temperature ranges with integrated cooling stretch

| | | | | |
|---|---|---|---|---|
| Option 1: | Medium: -40...+150 °C | Environment: | -40...+125 °C | Max. pressure: 400 bar |
| Option 2: | Medium: -40...+200 °C | Environment: | -40...+125 °C | Max. pressure: 400 bar |

## Derating Curve Cooling Stretch

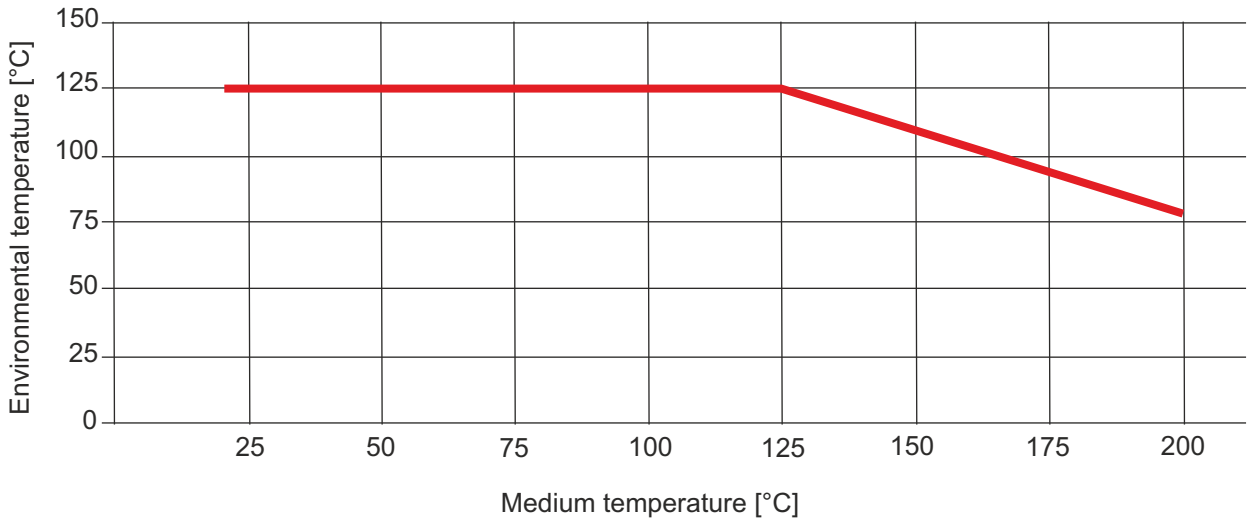


Maximum safe environmental temperature

| | |
|---|---|
| Temperature medium <125 °C: | 125 °C |
| Temperature medium ≥125 °C: | 202 °C - (0,62*temperature medium [°C]) |

Maximum safe medium temperature

| | |
|---|---|
| Temperature environment <80 °C: | 200 °C |
| Temperature environment ≥80 °C: | 326 °C - (0,61*temperature environment [°C]) |

| | | |
|---|---|---|
| Storage and transport: | Temperature range: | -40...+70 °C |
| | Humidity: | 67% rF at 40 °C<br>(climate class 4K4H per EN 60721-3-4) |
| Climate class: | Storage: | 1K3 (EN 60721-3-1) |
| | Transport: | 2K3 (EN 60721-3-2) |
| | Operation: | 4K4H<br>(EN 60721-3-4, without condensation or icing) |
| Vibration resistance: | Standard: | 20 g, 10...2000 Hz (per IEC 60068-2-6) |
| | with M12x1 metal: | 40 g, 10...2000 Hz (per IEC 60068-2-6) |
| | with cooling stretch: | 10 g, 10...2000 Hz (per IEC 60068-2-6) |
| Long-term vibration resistance: | | |
| | Standard: | 10 g (per IEC 60068-2-6) |
| Shock resistance: | Standard: | 100 g, 6 ms (per IEC 60068-2-27) |
| | with M12x1 metal: | 500 g, 1ms (per IEC 60068-2-27) |
| EM-field: | 30 V/m (80...1000 MHz) | |
| Service life: | Standard: | 100 million load changes |
| | Ranges >600 bar: | 10 million load changes |
| CE-conformity: | Pressure equipment directive: | 2014/68/EU |
| | EMC directive: | 2014/30/EU |
| | | EN 61326: Emission (group 1, class B) and Jamming resistance (industrial sector) |
| Test report (on request): | Non-linearity 0,5% | |
| | Non-linearity 0,25% | |
| | Non-linearity 0,125% | |

## Mechanics

Material:

| | | |
|---|---|---|
| Casing: | 316Ti-steel | |
| Electrical connections: | | |
| | Round plug M12 x 1 (4-pole): | PBT/PET GF30 |
| | Round plug M12 x 1 (4-pole, metallic) : | 316L-steel |
| | Right angle plug DIN 175301-803 A: | PBT/PET GF30 |
| | Right angle plug DIN 175301-803 C: | PBT/PET GF30 |
| | Heavy-Duty-Connector: | 316L-steel |
| | Bajonett plug (6-pole): | 316L+Al-steel |
| | Field housing: | 316L-steel, 316Ti-steel |
| | Cable outlet: | |
| | IP 67: | PA66, PBT/PET GF30 |
| | 1/2 NPT-Conduit: | 316L-steel |
| | IP 68: | 316L-steel |
| | IP 68, FEP: | 316L-steel |
| | IP 6K9K: | 316L-steel |
| Zero point adjustment ring: | PBT/PET Gf30 | |
| Parts in contact with medium: | | |
| Relative measurement range: | Ranges ≤ 10 bar: | 316L-steel |
| | Ranges > 10 bar: | 316L-steel + 13-8 PH |
| | Ranges > 1000 bar: | ASTM 630 and 13-8 PH |
| Absolute pressure measurement range: | | 316L-steel |
| Sealings: | see chapter 10 | |
| Pressure transmission fluid: | Ranges < 10 bar relative: (and for all absolute) | Synthetic oil |

Options for special media:

Option oil and fat free:

| | |
|---|---|
| Residual hydrocarbon: | < 1000 mg/m² |

(with protection cap on process connection)

Option oxygen, oil and fat free:

| | | |
|---|---|---|
| Residual hydrocarbon: | Messbereich < 30 bar: | < 500 mg/m² |
| | Messbereich > 30 bar: | < 200 mg/m² |

(with protection cap on process connection, device shrink-wrapped in PE-bag)

| | |
|---|---|
| Max. permissible temperature: | -20...+60 °C |
| Elastomer seal: | -15...+60 °C |

(Only possible with FKM and max. 30 bar measurement range.)

Attention: This option is not possible for process connections with internal threads.

| | |
|---|---|
| Option hydrogen: | on request |
| Ranges: | from 25 bar relative |
| Messstoffberührte Teile: | 316L-steel and Elgiloy® (2.4711) |
| Max. permissible temperature: | -30...+30 °C |

## Pressure Ranges

### Pressure table relative pressure (in bar)

| | | | | | | | | |
|---|---|---|---|---|---|---|---|---|
| Measurement range | 0...0,4 | 0...0,6 | 0...1 | 0...1,6 | 0...2,5 | 0...4 | 0...6 | 0...10 |
| Measurement range | 0...16 | 0...25 | 0...40 | 0...60 | 0...100 | 0...160 | 0...250 | 0...400 |
| Measurement range | 0...600 | 0...1000 | 0...1600 | | | | | |

### Pressure table absolute pressure (in bar)

| | | | | | | | | |
|---|---|---|---|---|---|---|---|---|
| Measurement range | 0...0,4 | 0...0,6 | 0...1 | 0...1,6 | 0...2,5 | 0...4 | 0...6 | 0...10 |
| Measurement range | 0...16 | 0...25 | 0...40 | | | | | |

### Pressure table vacuum and ±ranges (in bar)

| | | | | | | | | |
|---|---|---|---|---|---|---|---|---|
| Measurement range | -0,4...0 | -0,6...0 | -1...0 | -1...+0,6 | -1...+1,5 | -1...+3 | -1...+5 | -1...+9 |
| Measurement range | -1...+15 | -1...+24 | -1...+39 | -1...+59 | | | | |

Given measurement ranges are also available in psi, kg/cm², kPa and MPa. Special measuring ranges are available on request in ranges between 0…0,4 bar and 0…1600 bar. Special measuring ranges have a reduced long-time stability and increased measurement errors.

### Overload limits

Given overload limits are only valid for the sensor element used. The pressure limit can be lower, depending on which process connection and seal is used. A higher overload limit leads to increased measurement errors.

| | | |
|---|---|---|
| Overload limit: | <10 bar: | 3 times |
| | ≥10 bar: | 2 times (absolute pressure maximum 60 bar) |
| Option: | <10 bar: | 5 times |
| | ≥10 bar: | 3 times (relative pressure up to ≤400 bar, absolute pressure up to <16 bar) |

### Reference conditions (per IEC 61298-1)

| | |
|---|---|
| Temperature: | 15...25 °C |
| Air pressure: | 860...1060 mbar |
| Humidity: | 45...75% rF |
| Auxiliary energy: | 24 VDC / 5 VDC for ratiometric output |
| Fitting position: | Calibrated at vertical fitting position (process connection facing down) |

## 8 Dimensions (in mm)

Right angle plug (valve plug type A)
DIN EN 175301-803A

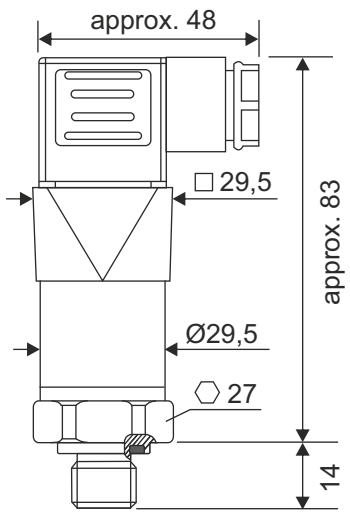


Weight: approx. 150 g

Right angle plug (valve plug type C)
DIN EN 175301-803C

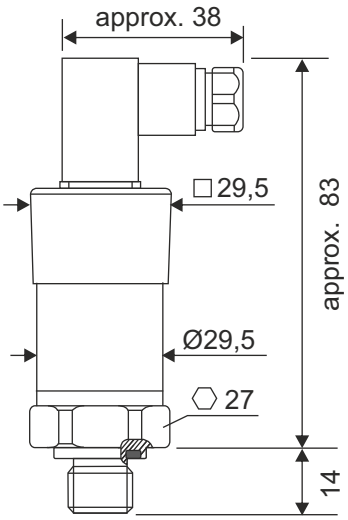


Weight: approx. 150 g

Bajonett plug
6-pole

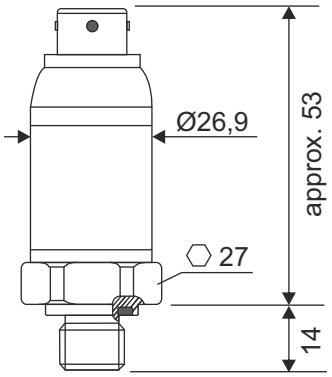


Weight: approx. 150 g

Round plug M12x1
4-pole

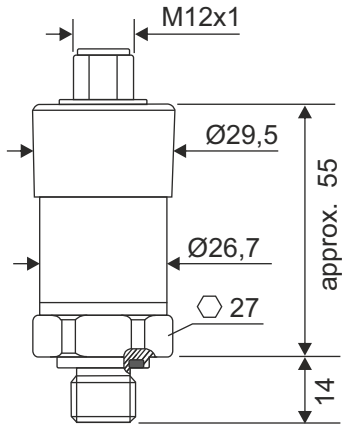


Weight: approx. 150 g

Round plug M12x1 (metal)
4-pole

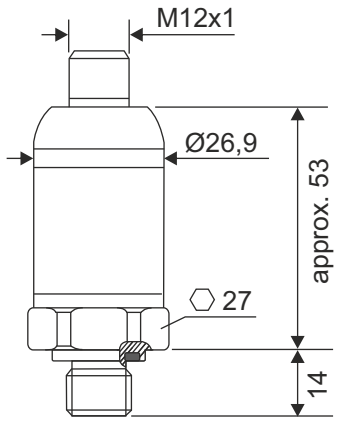


Weight: approx. 150 g

Heavy-Duty-Connector
4-pole

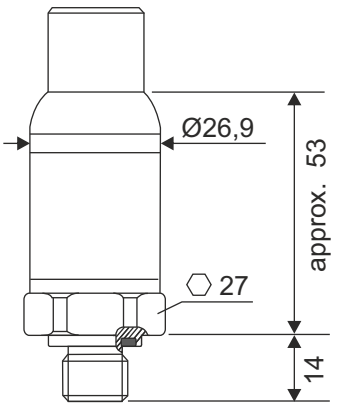


Weight: approx. 150 g

Right angle plug (valve plug type A)
DIN EN 175301-803A

with zero point adjustment

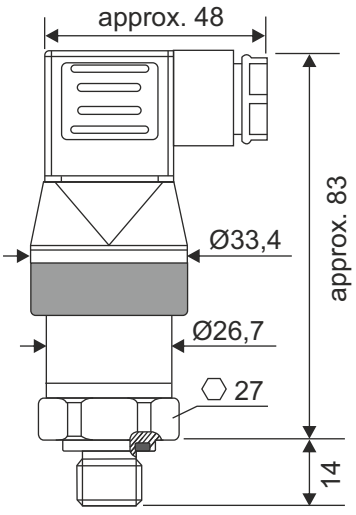


Weight: approx. 150 g

Cable outlet
IP68, FEP, IP6K9K

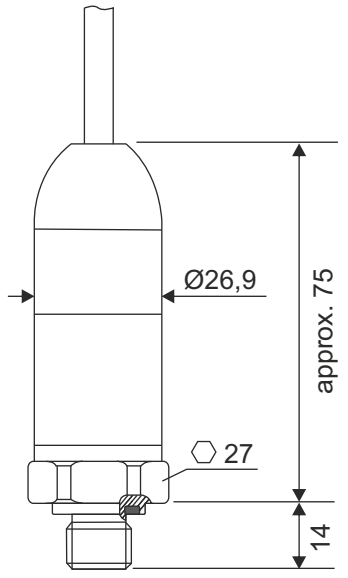


Weight: approx. 220 g

Cable outlet
1/2NPT conduit

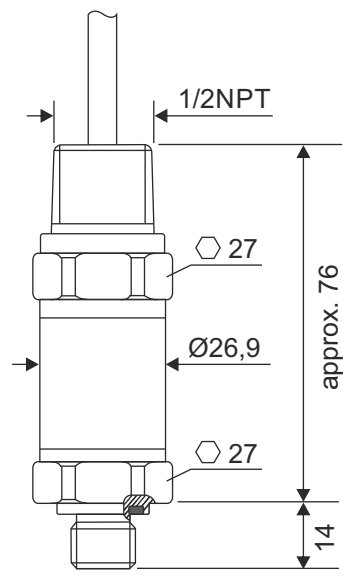


Weight: approx. 220 g

## 8 Dimensions (in mm) (Continued)

| Field housing | Cable outlet<br>IP67 | Right angle plug (valve pl. type A)<br>DIN EN 175301-803A |
|---|---|---|
| 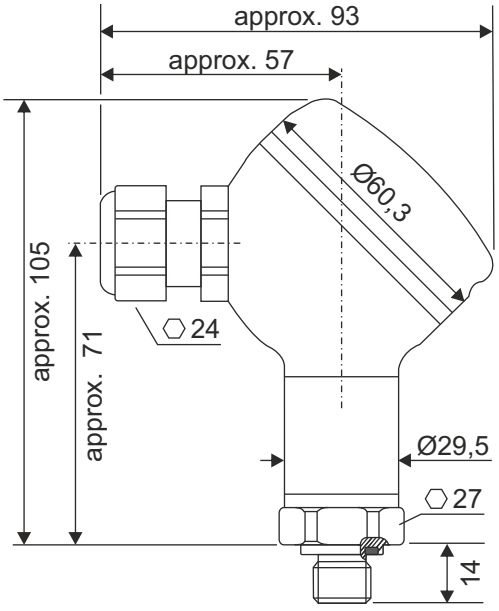 | 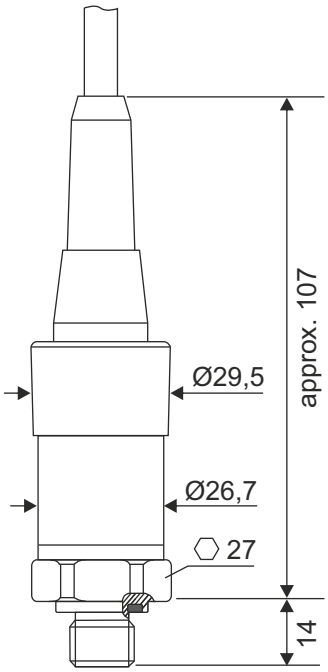 | with cooling stretch<br>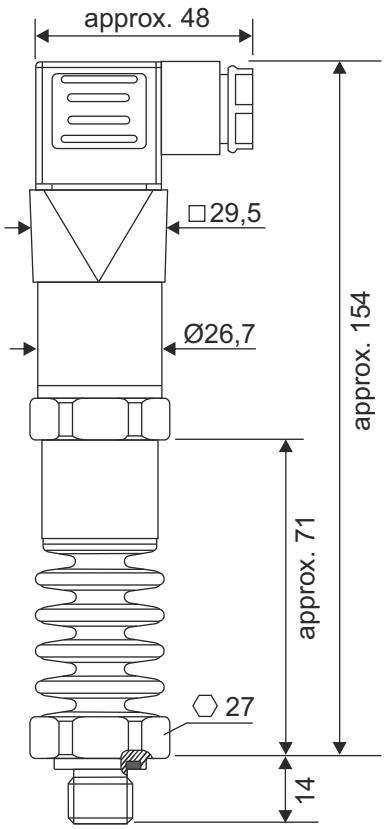 |
| Weight: approx. 290 g | Weight: approx. 150 g | Weight: approx. 360 g |

# 9 Application as Component of a Safety Function

This section treats the PT-ST2 pressure transmitter as part of a safety function. Please read the rest of this operating manual first. Please comply with Safety Instructions!

The PT-ST2 is designed for universal application in mechanical and plant engineering. The user has to make frequent pressure changes to ensure a proportional output-signal change.

Based on the selected performance level, there is no diagnostic function for detecting a static signal on basis of an instrumental error available.

## 9.1 Norms and Abbreviations

### 9.1.1 Norms

| | |
|---|---|
| EN ISO 13849-1:2008 | Safety of machines - Safety-related parts of control systems<br>Part 1: General design principles (ISO 13849-1:2006); |
| EN ISO 13849-2:2012 | Safety of machines - Safety-related parts of control systems<br>Part 2: Validation (ISO 13849-2:2012) |
| EN 61326-3-1:2008 | Electrical measurement, control and laboratory equipment - EMC requirements<br>Part 3-1: Noise immunity requirements for safety-related systems and for devices intended for safety-related functions.<br>(functional safety) - general industrial applications |

### 9.1.2 Abbreviations

| | |
|---|---|
| FMEA | Failure modes effects and diagnostic analysis |
| MTTFd | Expected value for mean time to dangerous failure |
| PL | Performance level: Discrete level, which specifies the ability of safety-related parts of a control device to execute a safety-related function under predictable conditions. |
| TM | Working life (“mission time“) |
| Transient response time | Time span between the erratic change of the pressure signal and the moment at which the output signal deviates by not more than 1% tolerance from final persistence state value . |
| Closing time | Time after power on until the first valid measured value (max. ±1% FSO error) is present at signal output. |
| CAT | Category (structural structure as a basis to achieve a certain PL) |

## 9.2 Pressure Ranges

See product label for the permissible pressure range of the pressure transmitter PT-ST2.

Warning

**The overload limit should never be exceeded, even if errors occur.** Loads above overload limit can cause measurement errors in the output signal and thus impair the safety function.

Pressure surges below the nominal pressure and duration less than 1 ms can cause measuring errors in the output signal and thus impair the safety function. To reduce pressure surges, optional channel bores with smaller diameter are available. Make sure the reduced diameter is suitable for the particle size of the medium.

## 9.3 Product Label for Application as Safety Function Component (Example)

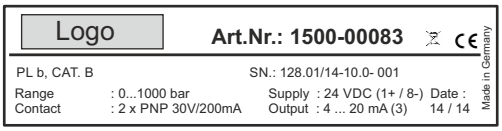


Art.No.: Article number

SN : Serial number

## 9.4 Electrical Connection for Applicaton as Safety Function Component

**Warning**

For devices with pluggable electrical connection, suitable mating plugs must be used. The intrusion of moisture must be prevented reliably.

**Observe the start-up information in this operating manual! (See chapter 4!)**

### 9.4.1 Pin assignment

The assignment of the terminal pins to the signals and the signal scaling can be found on the product label.

Connection 0 V / U-: Common connection for negative operating voltage and signal ground.
Connection U+: Positive operating voltage
Connection S+: Signal output at voltage outputs

### 9.4.2 Output signals / valid parameters

| Parameter | Output signal | | | | | |
|---|---|---|---|---|---|---|
| | 4...20 mA (2-wire) | 20...4 mA (2-wire) | DC 1...5 V | DC 1...6 V | DC 0,5...4,5 V | DC 0,5...4,5 V ratiometric |
| Span range | 16 mA | 16 mA | 4 V | 5 V | 4 V | 4 V * $U_B$ / 5 V |
| Dynamic range limit value low | 3,6 mA | 23 mA | -0,4 V | -0,4 V | -0,4 V | 0,1 * $U_B$ / 5 V |
| Span starting limit value | 3,8 mA | 20,5 mA | 0,9 V | 0,9 V | 0,4 V | 0,4 V * $U_B$ / 5 V |
| Span starting nominal value | 4 mA | 20 mA | 1 V | 1 V | 0,5 V | 0,5 * $U_B$ / 5 V |
| Span ending nominal value | 20 mA | 4 mA | 5 V | 6 V | 4,5 V | 4,5 * $U_B$ / 5 V |
| Span ending limit value | 20,5 mA | 3,8 mA | 5,5 V | 6,5 V | 4,7 V | 4,7 * $U_B$ / 5 V |
| Dynamic range limit value high | 23 mA | 3,6 mA | 11,5 V | 11,5 V | 11,5 V | 4,9 * $U_B$ / 5 V |
| Operating voltage $U_B$ nominal [V DC] | 24 | 24 | 24 | 24 | 24 | 5 |

### 9.4.2 Output signals / valid parameters (continued)

| Parameter | Output signal | | | | | |
|---|---|---|---|---|---|---|
| | 4...20 mA (2-wire) | 20...4 mA (2-wire) | DC 1...5 V | DC 1...6 V | DC 0,5...4,5 V | DC 0,5...4,5 V ratiometric |
| Operating voltage $U_B$ minimal [V DC] | 8 | 8 | 8 | 9 | 8 | 4,5 |
| Operating voltage $U_B$ maximal [V DC] | 36 | 36 | 36 | 36 | 36 | 5,5 |
| Operating voltage $U_B$ absolute maximum [V DC] | 40 | 40 | 40 | 40 | 40 | 5,5 |
| Maximal ripple of operating voltage [% of V DC] frequency range with 50 Hz, 60 Hz, 100 Hz, 120 Hz | ±0,5 | ±0,5 | ±0,5 | ±0,5 | ±0,5 | N/A |
| Supply current maximal [mA] | 25 | 25 | 12 | 12 | 12 | 12 |
| Power loss [mW] | 828 | 828 | 432 | 432 | 432 | 432 |
| Influence operating voltage [% je 10 V] | ±0,05 | ±0,05 | ±0,05 | ±0,05 | ±0,05 | N/A |
| Maximal load [Ω] | ≥ ($U_B$ - 7,5 V) / 0,023 A | ≥ ($U_B$ - 7,5 V) / 0,023 A | ≤ 5.000 | ≤ 6.000 | ≤ 4.500 | ≤ 4.500 |
| Maximal load capacity [nF] | N/A | N/A | 100 | 100 | 100 | 0,47 |
| Reverse voltage protection between $U_B$+ / $U_B$- | yes | yes | yes | yes | yes | no |
| Short circuit protection between S+ / $U_B$+ | N/A | N/A | no | no | no | no |
| Short circuit protection between S+ / $U_B$- | N/A | N/A | yes | yes | yes | yes |
| Transient response time [ms] | 3 | 3 | 3 | 3 | 3 | 3 |
| Closing time [ms] | 150 | 150 | 150 | 150 | 150 | 150 |

## 9.5 Safety Function and Diagnosis

The safety function of the PT-ST2 is that the pressure transmitter converts the physical input value pressure into an electrical signal.

### 9.5.1 PT-ST2 fault states

| Parameter | Output signal | | | | | |
|---|---|---|---|---|---|---|
| | 4...20 mA (2-wire) | 20...4 mA (2-wire) | DC 1...5 V | DC 1...6 V | DC 0,5...4,5 V | DC 0,5...4,5 V ratiometric |
| **Cyclical Check** | | | | | | |
| Underpressure necessary to detect error | -2,5% low alarm value max. 3,6 mA | -6,25% low alarm value max. 3,6 mA | -12,5% low alarm value 0,2...0,5 V | -10% low alarm value 0,2...0,5 V | -5% low alarm value 0,1...0,3 V | -5% low alarm value 0,1...0,3 V |
| Underpressure necessary to detect error | +6,25% low alarm value max. 3,6 mA | +2,5% low alarm value max. 3,6 mA | +25% low alarm value 0,2...0,5 V | +20% low alarm value 0,2...0,5 V | +10% low alarm value 0,1...0,3 V | +10% low alarm value 0,1...0,3 V |
| ADC-communication error (local-mode) | low alarm value max. 3,6 mA | low alarm value max. 3,6 mA | low alarm value 0,2...0,5 V | low alarm value 0,2...0,5 V | low alarm value 0,1...0,3 V | low alarm value 0,1...0,3 V |
| **Check on Start-Up** | | | | | | |
| Sensor error, EEPROM-checksum error (device-side diagnosticized hardware error) | low alarm value max. 3,6 mA | low alarm value max. 3,6 mA | low alarm value 0,2...0,5 V | low alarm value 0,2...0,5 V | low alarm value 0,1...0,3 V | low alarm value 0,1...0,3 V |

- All detected errors will be displayed as current downscaling alarm signal (low alarm value).
- Not detected errors can produce an undefined output signal inside or outside of the span range.
- The alarm signal for over- or underpressure is set if the error state persists for at least 10 seconds uninterrupted.
- Cyclically checked errors are not permanently active, e. g. a return to the measurement modus during run-time is possible after leaving the error range.
- Missing short-circuit protection between signals as per table *output signal / valid parameters* (see page 25-26) can cause the destruction of the pressure measurement device. Short-circuit causes the loss of the safety function.
- The higher-level external logic unit has to bring the installation into a safe state if the alarm condition is triggered.

**Warning**

The PT-ST2 is only suitable for pressure measurement in applications with dynamically changing pressure values. The higher-level external logic unit has to bring the installation into a safe state if the low alarm value is triggered.

The user is required to configure the entire safety function as per EN ISO 13849-1:2008. The maximum PL the safety function can reach is the PL of the PT-ST2. The external logic unit needs to fulfill at least the same requirements as per EN ISO 13849-1:2008 as the PT-ST2.

### 9.5.2 Safe measurement function accuracy

The total safety accuracy is ±(2 % + 0,3 % drift/year).

The maximum error in measurement includes, in addition to the base accuracies listed in the data sheet, the following errors:

- EMC
- temperature error
- long-time stability

### 9.5.3 Test for detecting signal drift

A check of the pressure transmitter for possible drift behavior has to be conducted by the external logic unit after start-up in unpressurized state. If the following condition is applicable, no device error has to be assumed:

- deviation zero point smaller then 0,2 % of nominal pressure

This tests can be conducted either:

- at every start-up or operation in unpressurized state
- or during maintenance of the application, which has to be conducted inside a maximum time interval of 12 months.

## 9.6 Safety Parameters

### 9.6.1 Advice for calculating safety parameters

The failure rate of the electronics was calculated by the FEMA. The calculations were based on device failure rates as per SN29500 and data from device manufacturers.

The following exception applies:

The mean environmental temperature during operating time is 40 °C.

Based on EN ISO 13849-1:2008, a maximal working life of 20 years is assumed for a pressure transmitter as part of a safety application.

After expiration of its working life, the pressure transmitter has to be shut down.

**Warning**

The channel bore must not be blocked by particles inside the pressure medium.
Further requirements as per the preceding chapters of this operating manual.

### 9.6.2 Limits for operation and environmental conditions

**Permissible temperature ranges**

Medium and environment: -20 ... +80 °C

Outside of the permissible temperature range the measurement accuracy of the pressure transmitter is not guaranteed, which can compromise the safety function.

**Performance Level parameters**

| | |
|---|---|
| MTTFd: | 546 years |
| Category: | B |
| PL: | b |
| TM: | 20 years |

## 9.7 Operating Parameters

### 9.7.1 Operating voltage values for connection $U_{B+}$




Please ensure the operating voltage is kept inside the permissible range.
The supply voltage must not fall short of the minimal supply voltage nor exceed the maximal supply voltage.

The safety function can be compromised if these requirements are not observed.

- In addition, please observe the values for maximal and minimal permissible load in relation to operating voltage. See table *output signal / valid parameters* on pages 25-26.
- The PT-ST2 supply has to be made with an energy-limited circuit as per UL/EN/IEC 61010-1 or LPS as per UL/EN/IEC 60950-1 or (for North America) class 2 as per UL 1310 / UL 1585 (NEC or CEC). The current supply has to be suitable for operation above 2000 m if the pressure transmitter is used from this height on.

### 9.7.2 EMC

Standard EN 61326-3-1:2008 applies.



As per EN 61326-3-1:2008 the test as per IEC 61000-4-5 requires a severity of 2 kV. The PT-ST2 noise immunity is 1 kV. To reach a higher noise immunity external protection measures are required.

### 9.7.3 Pressure transmitter PT-ST2 start-up

Please check functional capability before start-up!

Warning

- After PT-ST2 start-up, please launch a function test of the entire safety function (safety loop), to test if system safety function is ensured.

- Protect the pressure transmitter at the installation place from mechanical damage at all costs.

- Function tests serve to verify faultless function of the safety device interacting with all components (sensor, logic unit, actuator).

### 9.7.4 PT-ST2 shutdown

See chapter 5 and 6, starting at page 14.

Warning

- Please secure shutdown devices against accidental start-up, e. g. by marking the devices.

- Please perform a function test of the entire safety function (safety loop) after replacing the PT-ST2. This has to be done to check if the safety function of the system is still ensured.

Function tests serve to verify faultless function of the safety device interacting with all components (sensor, logic unit, actuator).

### 9.7.5 Maintenance

The PT-ST2 does not require routine maintenance work.

## 10 Accessories

| | | |
|---|---|---|
| Mating plugs: | | |
| Right angle plug DIN EN 175301-803 A: | with screw connection, metric: | without cable<br>2 m cable<br>5 m cable<br>2 m cable, shielded |
| | with screw connection, conduit: | without cable |
| Right angle plug DIN EN 175301-803 C: | without cable<br>2 m cable<br>5 m cable | |
| Round plug M12 x 1 (4-pole): | straight: | 2 m cable<br>5 m cable<br>2 m cable, shielded |
| | angled: | 2 m cable<br>5 m cable |
| Seals for mating plugs: | | |
| Right angle plug DIN EN 175301-803 A: | brown | |
| Right angle plug DIN 175301-803 C: | brown | |

| **Seals for process connection:** | | | |
|---|---|---|---|
| G 1/8 B | Copper | G 1/4 B | Copper<br>CrNi-steel |
| G 1/2 B | Copper<br>CrNi-steel | G 3/8 B | Copper |
| M12 x 1,5 | Copper<br>CrNi-steel | M20 x 1,5 | Copper<br>CrNi-steel |
| G 1/4 A | NBR<br>FKM<br>FPM | G 1/2 A | NBR<br>FKM |
| M14 x 1,5 | NBR<br>FKM | 7/16-20<br>UNF BOSS | NBR<br>FKM |
| 9/16-18<br>UNF BOSS | NBR<br>FKM | | |