SIEMENS

SITRANS F

Coriolis Flowmeters MASS 2100 & FC300 (FCT010)

Operating Instructions

Introduction 1

Safety notes 2

Description 3

Installing/Mounting 4

Connecting 5

Commissioning 6

Functions 7

Alarms and system messages 8

Service and maintenance 9

Diagnosing and troubleshooting 10

Technical data 11

Dimensions and weight 12

Technical reference A

Modbus holding registers B

Certificates and support C

These Operating Instructions apply to Siemens products

06/2017
A5E39788682-AA

Legal information

Warning notice system

This manual contains notices you have to observe in order to ensure your personal safety, as well as to prevent damage to property. The notices referring to your personal safety are highlighted in the manual by a safety alert symbol, notices referring only to property damage have no safety alert symbol. These notices shown below are graded according to the degree of danger.

⚠ DANGER

indicates that death or severe personal injury **will** result if proper precautions are not taken.

⚠ WARNING

indicates that death or severe personal injury **may** result if proper precautions are not taken.

⚠ CAUTION

indicates that minor personal injury can result if proper precautions are not taken.

NOTICE

indicates that property damage can result if proper precautions are not taken.

If more than one degree of danger is present, the warning notice representing the highest degree of danger will be used. A notice warning of injury to persons with a safety alert symbol may also include a warning relating to property damage.

Qualified Personnel

The product/system described in this documentation may be operated only by **personnel qualified** for the specific task in accordance with the relevant documentation, in particular its warning notices and safety instructions. Qualified personnel are those who, based on their training and experience, are capable of identifying risks and avoiding potential hazards when working with these products/systems.

Proper use of Siemens products

Note the following:

⚠ WARNING

Siemens products may only be used for the applications described in the catalog and in the relevant technical documentation. If products and components from other manufacturers are used, these must be recommended or approved by Siemens. Proper transport, storage, installation, assembly, commissioning, operation and maintenance are required to ensure that the products operate safely and without any problems. The permissible ambient conditions must be complied with. The information in the relevant documentation must be observed.

Trademarks

All names identified by ® are registered trademarks of Siemens AG. The remaining trademarks in this publication may be trademarks whose use by third parties for their own purposes could violate the rights of the owner.

Disclaimer of Liability

We have reviewed the contents of this publication to ensure consistency with the hardware and software described. Since variance cannot be precluded entirely, we cannot guarantee full consistency. However, the information in this publication is reviewed regularly and any necessary corrections are included in subsequent editions.

Siemens AG
Division Process Industries and Drives
Postfach 48 48
90026 NÜRNBERG
GERMANY

Document order number: A5E39788682
℗ 09/2017 Subject to change

Copyright © Siemens AG 2017.
All rights reserved

Table of contents

1 Introduction 7

1.1 Document history 7

1.2 Product compatibility 7

1.3 Device documentation package 8

1.4 Items supplied 9

1.5 Checking the consignment 11

1.6 Security information 11

1.7 Transportation and storage 12

2 Safety notes 13

2.1 Preconditions for use 13

2.2 Laws and directives 13

2.2.1 FCC Conformity 14

2.2.2 Conformity with European directives 14

2.3 Requirements for special applications 15

2.4 Use in hazardous areas 15

2.4.1 Installation in hazardous areas 16

3 Description 21

3.1 Overview 21

3.2 Industrial use note 21

3.3 System integration 21

3.4 Modbus RTU technology 22

3.5 Design 23

3.6 Features 24

3.7 Applications 25

3.8 Approvals 26

3.9 Theory of operation 26

4 Installing/Mounting 29

4.1 Basic safety notes 29

4.1.1 Incorrect mounting at Zone 0 30

4.1.2 Installation location requirements 31

4.1.3 Proper mounting 32

4.2 Installation instructions 32

4.2.1 Sensor installation 32

4.2.1.1 Determining a location 32

4.2.1.2 Orientation of the sensor....33
4.2.1.3 Mounting the sensor....37
4.2.1.4 Hydrostatic testing....39
4.2.1.5 Process pipe connection....40
4.2.1.6 Mounting a pressure guard....40
4.2.2 Transmitter installation....43
4.2.2.1 Mounting the DSL....43
4.3 Disassembly....44
5 Connecting....45
5.1 Basic safety notes....45
5.2 Connecting the MASS2100/FC300....48
5.2.1 Warnings....48
5.3 Wiring information....52
5.3.1 Wiring in hazardous areas....52
5.4 Device nameplates....53
5.4.1 Transmitter identification nameplate....53
5.4.2 Transmitter specification nameplate....54
5.4.3 Sensor identification nameplate FC300....57
6 Commissioning....59
6.1 Chapter oveview....59
6.2 Basic safety notes....59
6.2.1 Warnings....60
6.3 General requirements....61
6.4 Local commissioning....61
6.4.1 Power-up....61
6.4.2 Initial startup....61
6.5 Commissioning with PDM....62
6.5.1 Operating via SIMATIC PDM....62
6.5.2 Functions in SIMATIC PDM....63
6.5.3 Commissioning steps....63
6.5.4 Initial setup....63
6.5.5 Adding device to communication network....65
6.5.6 Configuring a new device....66
6.5.7 Wizard - Quick Start via PDM....67
6.5.8 Wizard - Zero Point adjustment....74
6.5.9 Changing parameter settings using SIMATIC PDM....75
6.5.10 Parameters accessed via drop-down menus....76
6.5.11 Zero point adjustment....77
6.5.12 Process variables....79
7 Functions....81
7.1 Process values....81
7.2 Zero point adjustment....81
7.3 Low flow cut-off....83
7.4 Empty tube monitoring....84

7.5 Process noise damping....85
7.6 Totalizer....86
7.7 Access management....87
7.8 Simulation....88
7.9 Changing Modbus communication settings....88
7.10 Float transmission....89
8 Alarms and system messages....91
8.1 Alarm messages....91
9 Service and maintenance....93
9.1 Basic safety notes....93
9.2 Recalibration....95
9.3 Cleaning....95
9.3.1 Electrostatic charge....95
9.4 Maintenance and repair work....95
9.4.1 Maintenance during continued operation in a hazardous area....96
9.4.2 Humid environment....96
9.4.3 Hot, toxic and corrosive process media....97
9.4.4 Improper connection after maintenance....97
9.4.5 Maintenance....97
9.4.6 Service information....98
9.5 Replacing the device....98
9.6 Transport....99
9.7 Return procedure....99
9.8 Disposal....100
9.9 Spare parts and accessories....101
9.9.1 Ordering of spare parts....101
9.9.2 Ex approved products....101
9.9.3 Replaceable components....101
10 Diagnosing and troubleshooting....103
10.1 Display of device status according SIMATIC and NAMUR NE107....103
10.2 Fault codes and corrective actions....104
10.2.1 Diagnostic messages....104
10.3 Operation troubleshooting....105
10.3.1 Troubleshooting sensor-related problems....105
10.3.1.1 Step 3: Calculating the measurement error....106
10.3.2 How do I update the firmware?....109
10.4 Diagnosing with PDM....109
11 Technical data....111
11.1 Power....111

11.2 Performance....111
11.3 Interface....114
11.3.1 Modbus Communication Specification....114
11.4 Construction....115
11.4.1 Design....116
11.4.2 Basic electrical requirement for master system....117
11.4.3 Cables and cable entries....117
11.5 Rated operating conditions....118
11.6 Process variables....119
11.7 PED....119
11.8 Pressure - temperature ratings....123
11.8.1 Pressure - temperature ratings (stainless steel sensors)....124
11.8.2 Pressure - temperature ratings (Hastelloy sensors)....126
11.9 Approvals....127
11.10 SensorFlash....129
12 Dimensions and weight....131
12.1 Sensor dimensions....131
12.2 MASS2100 DI3, DI6 & DI15....136
12.3 Transmitter dimensions....138
A Technical reference....141
A.1 Exception handling....144
A.2 Float definition....144
A.3 Sensor dimension dependent default settings....145
B Modbus holding registers....155
B.1 Modbus addressing model....155
B.2 Modbus function codes....155
B.3 Modbus holding registers tables....160
C Certificates and support....183
C.1 Technical support....183
C.2 QR code label....183
C.3 Certificates....184
Index....185

Introduction

1

These instructions contain all information required to commission and use the device. Read the instructions carefully prior to installation and commissioning. In order to use the device correctly, first review its principle of operation.

The instructions are aimed at persons mechanically installing the device, connecting it electronically, configuring the parameters and commissioning it, as well as service and maintenance engineers.

This document are standard delivered in electronic media with the device. Latest version can be downloaded at www.siemens.com (http://support.automation.siemens.com/WW/view/en/60666565/134200)

1.1 Document history

The following table shows major changes in the documentation compared to the previous edition.

The most important changes in the documentation when compared with the respective previous edition are given in the following table.

Edition	Note
06/2017	First edition

Use the device to measure process medium in accordance with the information in the Operating Instructions.

Note

Use in a domestic environment

This Class A Group 1 equipment is intended for use in industrial areas.

In a domestic environment this device may cause radio interference.

1.2 Product compatibility

Manual edition	Remarks	Device revision	Compatibility of device integration package	
06/2017	New Hardware extending sensor sizes	Modbus RS485 RTU FW: 4.00.00-xx HW:3	SIMATIC PDM V8.2 Service Pack 1	EDD: 2.00.xx or later

1.3 Device documentation package

The user documentation package for this product includes the following documents

Document	Purpose	Intended users	Availability
Application planning sheets	*Contains all information needed to* • *plan the mechanical / physical installation and control signals before the product arrives*	*Plant design engineers, control system designers*	• *Sent to the customer with Quote* • *On documentation disk* • *Available for download from homepage*
Operating Instructions	Contains all information neeeded to • check and identify the delivered package • install and electrically connect the product • commission the product, (setting parameters via HMI menu) • operate and maintain the device on a daily basis • troubleshoot and remedy minor operation interruptions	Instrument technicians, plant operators	• On documentation disk • Available for download from homepage • Hardcopy can be purchased via PIA Life Cycle Portal
Installation manual	*Contains all information needed to* • *install and connect the hardware device to the transmitter* • *troubleshoot and remedy minor operation instructions* • *learn about the operating prinmciple of the device*	*Instrument technicians, plant operators*	*On documentation disk* • *Available for download from homepage* • *Hardcopy can be purchased via PIA Life Cycle Portal*
Compact Operating Instructions - Ex	Contains all information needed to • satisfy the Special conditions for installation of Ex-certified products	Instrument technicians, plant operators with special training in systems for hazardous areas.	• On documentation disk • Available for download from homepage • Hardcopy can be ordered via PIA Life Cycle Portal
Functions Manual	*Contains* • *descriptions of all functions that can be accessed via the local display (HMI)* • *guide to setting parameters to obtain optimum operation of the device*	*Instrument technicians, plant operators*	• *On documentation disk* • *Available for download from homepage* • *Hardcopy can be purchased via PIA Life Cycle Portal*

Document	Purpose	Intended users	Availability
Functional Safety Manual (SIL)	*Contains all information needed to* • *set up, operate and maintain the device in a safety related application (SIL)*	*System integrators with special training in functional safety systems*	• *On documentation disk* • *Available for download from homepage* • *Hardcopy can be purchased via PIA Life Cycle Portal*
Communications Manual	*Contains all information needed to integrate the system into a network.*	*Control system designers, system integrators, instrument engineers*	• *On documentation disk* • *Available for download from homepage* • *Hardcopy can be purchased via PIA Life Cycle Portal*

1.4 Items supplied

Flowsensors

- MASS 2100 DI 1.0, DI 1.5, DI 2.1
- Sensorprom or SensorFlash
- Calibration report
- Calibration certificate

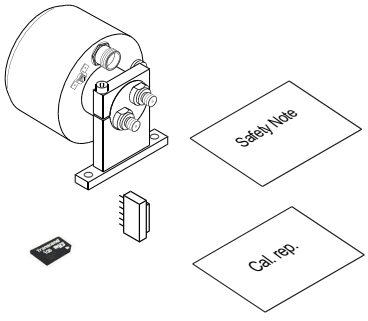

- MASS 2100 DI 3, DI 6, DI 15
- Sensorprom or SensorFlash
- Calibration report
- Calibration certificate

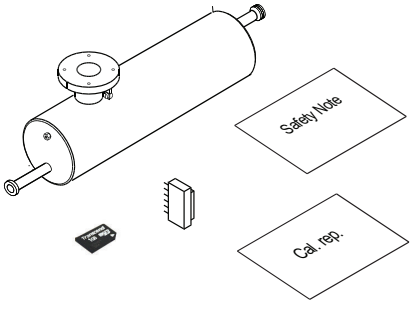

- FC300 DN 4
- Sensorprom or SensorFlash
- Calibration report
- Calibration certificate

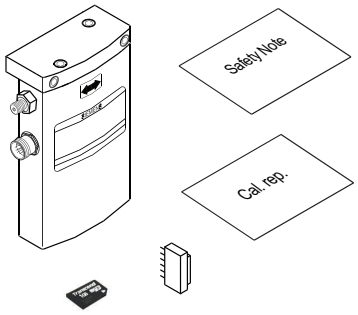

Flow transmitters:

- FCT010
- Calibration report
- Calibration certificate

Compact systems

- Packet of cable glands
- Calibration report
- Calibration certificate
- SensorFlash
  (installed in FCT030 transmiiter)

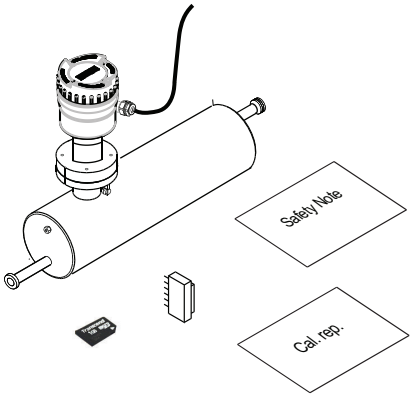

Remote system

- Remote field mount
- Packet of cable glands
- Calibration report
- Calibration certificate

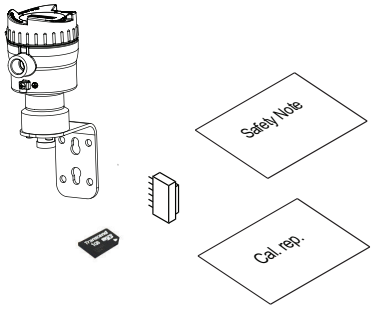

Note

Supplementary information

Supplementary product and production specific certificates are included on the SensorFlash® SD card which is delivered in a plastic bag.

Note

Scope of delivery may vary, depending on version and add-ons. Make sure the scope of delivery and the information on the nameplate correspond to your order and the delivery note.

1.5 Checking the consignment

1. Check the packaging and the delivered items for visible damage.
2. Report any claims for damages immediately to the shipping company.
3. Retain damaged parts for clarification.
4. Check the scope of delivery by comparing your order to the shipping documents for correctness and completeness.

⚠ WARNING

Using a damaged or incomplete device

Risk of explosion in hazardous areas.

- Do not use damaged or incomplete devices.

1.6 Security information

Siemens provides products and solutions with industrial security functions that support the secure operation of plants, systems, machines, and networks.

In order to protect plants, systems, machines and networks against cyber threats, it is necessary to implement – and continuously maintain – a holistic, state-of-the-art industrial security concept. Siemens' products and solutions only form one element of such a concept.

Customer is responsible to prevent unauthorized access to its plants, systems, machines and networks. Systems, machines and components should only be connected to the enterprise network or the internet if and to the extent necessary and with appropriate security measures (e.g. use of firewalls and network segmentation) in place.

Additionally, Siemens' guidance on appropriate security measures should be taken into account. For more information about industrial security, please visit:

http://www.siemens.com/industrialsecurity.

Siemens' products and solutions undergo continuous development to make them more secure. Siemens strongly recommends to apply product updates as soon as available and to always

use the latest product versions. Use of product versions that are no longer supported, and failure to apply latest updates may increase customer's exposure to cyber threats.

To stay informed about product updates, subscribe to the Siemens Industrial Security RSS Feed under

http://www.siemens.com/industrialsecurity.

1.7 Transportation and storage

To guarantee sufficient protection during transport and storage, observe the following:

- Keep the original packaging for subsequent transportation.
- Devices/replacement parts should be returned in their original packaging.
- If the original packaging is no longer available, ensure that all shipments are properly packaged to provide sufficient protection during transport. Siemens cannot assume liability for any costs associated with transportation damages.

NOTICE
Insufficient protection during storage The packaging only provides limited protection against moisture and infiltration. • Provide additional packaging as necessary.

Special conditions for storage and transportation of the device are listed in Technical data (Page 111).

The contents of this manual shall not become part of or modify any prior or existing agreement, commitment or legal relationship. The sales contract contains all obligations on the part of Siemens as well as the complete and solely applicable warranty conditions. Any statements regarding device versions described in the manual do not create new warranties or modify the existing warranty.

The content reflects the technical status at the time of publishing. Siemens reserves the right to make technical changes in the course of further development.

Safety notes

2

2.1 Preconditions for use

This device left the factory in good working condition. In order to maintain this status and to ensure safe operation of the device, observe these instructions and all the specifications relevant to safety.

Observe the information and symbols on the device. Do not remove any information or symbols from the device. Always keep the information and symbols in a completely legible state.

Symbol	Explanation
	Consult operating instructions

Use the device only for flow measurement in accordance with this operating instruction and observe the technical data.

WARNING

Improper device modifications

Risk to personnel, system and environment can result from modifications to the device, particularly in hazardous areas.

- Only carry out modifications that are described in the instructions for the device. Failure to observe this requirement cancels the manufacturer's warranty and the product approvals.

Note

Functional safety applications (SIL)

If the device is used in a functional safety application, refer to the functional safety manual.

2.2 Laws and directives

Observe the safety rules, provisions and laws applicable in your country during connection, assembly and operation. These include, for example:

- National Electrical Code (NEC - NFPA 70) (USA)
- Canadian Electrical Code (CEC) (Canada)

Further provisions for hazardous area applications are for example:

- IEC 60079-14 (international)
- EN 60079-14 (EC)

2.2.1 FCC Conformity

US Installations only: Federal Communications Commission (FCC) rules

⚠ WARNING

Improper device modifications

Danger to personnel, system and environment can result from improper modifications to the device.

- Changes or modifications not expressly approved by Siemens could void the user's authority to operate the equipment.

Note

- This equipment has been tested and found to comply with the limits for a Class A digital device, pursuant to Part 15 of the FCC Rules. These limits are designed to provide reasonable protection against harmful interference when the equipment is operated in a commercial environment.
- This equipment generates, uses, and can radiate radio frequency energy and, if not installed and used in accordance with the operating instructions, may cause harmful interference to radio communications. Operation of this equipment in a residential area is likely to cause harmful interference to radio communications, in which case the user will be required to correct the interference at his own expense.

2.2.2 Conformity with European directives

The CE marking on the device symbolizes the conformity with the following European directives:

Electromagnetic compatibility EMC 2014/30/EU	Directive of the European Parliament and of the Council on the harmonisation of the laws of the Member States relating to electromagnetic compatibility
Low voltage directive LVD 2014/35/EU	Directive of the European Parliament and of the Council on the harmonisation of the laws of the Member States relating to the making available on the market of electrical equipment designed for use within certain voltage limits

Atmosphère explosible ATEX 2014/34/EU	Directive of the European Parliament and the Council on the harmonisation of the laws of the Member States relating to equipment and protective systems intended for use in potentially explosive atmospheres
Pressure equipment directive PED 2014/68/EU	Directive of the European Parliament and of the Council on the approximation of the laws of the Member States concerning pressure equipment

The applicable directives can be found in the EC conformity declaration of the specific device.

Note

CE declaration

The CE declaration certificate is available on the SensorFlash SD card delivered with the device.

2.3 Requirements for special applications

Due to the large number of possible applications, each detail of the described device versions for each possible scenario during commissioning, operation, maintenance or operation in systems cannot be considered in the instructions. If you need additional information not covered by these instructions, contact your local Siemens office or company representative.

Note

Operation under special ambient conditions

We highly recommend that you contact your Siemens representative or our application department before you operate the device under special ambient conditions as can be encountered in nuclear power plants or when the device is used for research and development purposes.

2.4 Use in hazardous areas

Qualified personnel for hazardous area applications

Persons who install, connect, commission, operate, and service the device in a hazardous area must have the following specific qualifications:

- They are authorized, trained or instructed in operating and maintaining devices and systems according to the safety regulations for electrical circuits, high pressures, aggressive, and hazardous media.
- They are authorized, trained, or instructed in carrying out work on electrical circuits for hazardous systems.
- They are trained or instructed in maintenance and use of appropriate safety equipment according to the pertinent safety regulations.

⚠ WARNING

Use in hazardous areas

Risk of explosion.

- Only use equipment that is approved for use in the intended hazardous area and labelled accordingly.

⚠ WARNING

Loss of safety of device with type of protection "Intrinsic safety Ex i"

If the device has already been operated in non-intrinsically safe circuits or the electrical specifications have not been observed, the safety of the device is no longer ensured for use in hazardous areas. There is a risk of explosion.

- Connect the device with type of protection "Intrinsic safety" solely to an intrinsically safe circuit.
- Observe the specifications for the electrical data on the certificate and/or in Technical data (Page 111).

2.4.1 Installation in hazardous areas

⚠ WARNING

Equipment used in hazardous areas

Equipment used in hazardous areas must be Ex-approved for the region of installation and marked accordingly. It is required that the special conditions for safe use provided in the manual and in the Ex certificate are followed!

Hazardous area approvals

The device is approved for use in hazardous areas and has the approvals listed below. Special conditions for safe installation and operation specified by each approval authority are included in the relevant certificate.

ATEX:

FCT010 transmitter (can be installed in Zone 1 for gas and Zone 20/21 for dust):
Certificate: SIRA 17ATEX1215X
Ⓔx II 2 G
1D
2D

For gas:
Ex db ia [ia Ga] IIC T6 Gb
Ex db [ia Ga] IIC T6 Gb

For dust:
Ex ia [ia] IIIC T85 °C Da
Ex tb [ia Da] IIIC T85 °C Db
(Zone 20 only when installed as intrinsically safe)

Ta = -40°C to +60°C

IECEx:

FCT010 transmitter (can be installed in Zone 1 for gas and Zone 20/21 for dust):
Certificate: IECEx SIR 17.0046X

For gas:
Ex db ia [ia Ga] IIC T6 Gb
Ex db [ia Ga] IIC T6 Gb

For dust:
Ex ia [ia] IIIC T85 °C Da
Ex tb [ia Da] IIIC T85 °C Db
(Zone 20 only when installed as intrinsically safe)

(Ta = -40°C to +60°C)

CSA:

Ex Canada:

FCT010 transmitter (can be installed in Zone 1 for gas and Zone 20/21 for dust):

Certificate: cCSAus 2508644

Ex db ia [ia Ga] IIC T6 Gb

Ex ia [ia] IIIC T85°C Da

Ex tb [ia Da] IIIC T85°C Db

For US:

FCT010 transmitter (can be installed in Zone 1 for gas and Zone 20/21 for dust) and Class I +II+III Group A, B, C, D, E, F:

Certificate: cCSAus 2508644

Class I, II, III Division 1 Gp A, B, C, D, E, F, G

Class I Zone 1: AEx db ia [ia Ga] IIC T6 Gb

Class I Zone 1: AEx db [ia Ga] IIC T6 Gb

Class II Zone 20: AEx ia [ia] IIIC T85°C Da

Class II Zone 21: AEx tb [ia Da] IIIC T85°C Db

FC300

ATEX Certificate : DEMKO 05 ATEX 138072X.

Sitrans FC300 can be used in zone 0.

Ex ia IIC T6…T3 Ga

IECEx Certificate: IECEx ULD 17.0030

Sitrans FC300 can be used in zone 0.

Ex ia IIC T6…T3 Ga

Canada Certificate. UL E232147

Sitrans FC300 can be used in zone 0 and Class I Division 1.

Class I Div. 1 Grp. A, B, C, D.

Ex ia IIC T6…T3 IIC Ga

US Certifikate. UL E232147

Sitrans FC300 can be used in zone 0 and Class I Division 1.

Class I Div. 1 Grp. A, B, C, D

AEx ia IIC T6…T3 IIC Ga

MASS 2100

ATEX Certificate : DEMKO 03 ATEX 135252X

Sitrans FC MASS 2100 can be used in zone 0, 20

Ex ia IIC T6…T3 Ga

Ex ia IIIC T135°C…T180°C Da

IECEx Certificate : IECEx ULD 17.0029

Sitrans FC MASS 2100 can be used in zone 0, 20

Ex ia IIC T6…T3 Ga

Ex ia IIIC T135°C…T180°C Da

Canada Certificate. UL E232147

Sitrans FC MASS 2100 can be used in zone 0, 20 and Class I+II+III Division 1. Grp. A,B,C,D, E, F, G

Class I+II+III Division 1. Grp. A,B,C,D, E, F, G.

Ex ia IIC T6…T3 Ga

Ex ia IIIC T135°C…T180°C Da

US Certifikate: UL E232147

Sitrans FC MASS 2100 can be used in zone 0 and Class I Division 1.

Class I+II+III Division 1. Grp. A,B,C,D, E, F, G.

AEx ia IIC T6…T3 Ga

AEx ia IIIC T135°C…T180°C Da

Description

3

3.1 Overview

SITRANS Coriolis flow meter systems consist of a transmitter and a sensor. The following table lists the available combinations of transmitters and sensors.

Transmitter	Sensor type
FCT010	MASS 2100 FC300

3.2 Industrial use note

Note

Use in a domestic environment

This Class A Group 1 equipment is intended for use in industrial areas.

In a domestic environment this device may cause radio interference.

3.3 System integration

The FCT010 transmitter functions as a Modbus RTU slave with standard Modbus commands implemented. Setup parameters, process values, diagnostics, and status information are mapped as Modbus registers.

The device can be connected point-to-point or in a multidrop network in non-hazardous or hazardous areas. It can be connected to different hosts for example a PLC system or a PC used as service tool or configuration tool.

Note

Multidrop installations in hazardous areas

Multidrop installations in hazardous areas require explosionproof conduit seals for each device in division 1 wiring.

For zone classified locations use of Ex-d cable gland can be used if permitted by national installation regulation.

3.4 Modbus RTU technology

Modbus RTU is an open, serial protocol based on master/slave architecture. The protocol interconnects field equipment such as sensors, actuators, and controllers and is widely used in both process and manufacturing automation. The fieldbus environment is the base level group of digital networks in the hierarchy of plant networks.

Features

The SITRANS F Modbus RTU communication complies with the Modbus Serial Line Protocol. Among other things this implies a master / slave protocol at level 2 of the OSI model. A node (the master) issues explicit commands to one of the slave nodes and processes responses. Slave nodes will not transmit data without a request from the master node, and do not communicate with other slaves.

Modbus is a mono master system, which means that only one master at a time can be connected.

Unicast communication mode

In unicast mode (master/slave mode) the master sends a request to a specific slave device and waits a specified time for a response.

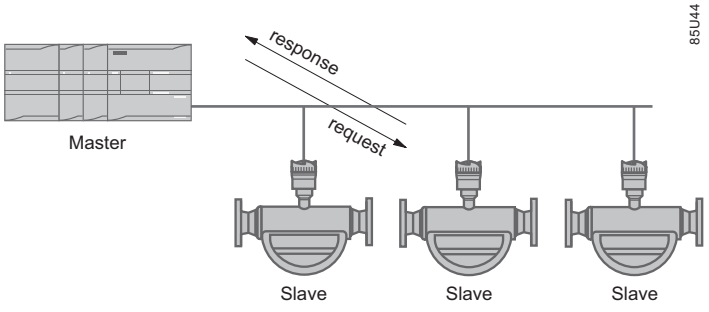

Figure 3-1 Unicast Mode

Modbus Frame

The Modbus frame is shown below and is valid for both requests and responses.

Table 3-1 Modbus Frame

SLAVE ADDRESS	FUNCTION MODE	DATA	CRC
1 Byte	1 Byte	0 to 252 Bytes	2 Bytes

References

For further information, please refer to the following specification and guidelines available at the Modbus Organization (http://www.modbus.org/) website

1. Serial Line Specification & Implementation guide
2. Application Protocol Specification

3.5 Design

Versions

The SITRANS FC flowmeters uses the Coriolis principle to measure flow and is available in a remote and a compact version.

- Compact version: The MASS2100 is a single mechanical unit where the transmitter is directly mounted on the sensor.
- Remote version: The MASS2100 sensor unit is remotely connected to a SITRANS FCT transmitter. Directly mounted on the sensor, its Digital Sensor Link (DSL) performs the signal processing of all measured signals in the sensor. The 4-wire connection between the transmitter and the sensor provides power and high-integrity digital communication between the DSL and the transmitter.

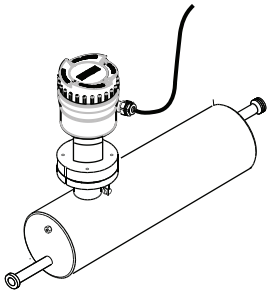

Figure 3-2 Compact version

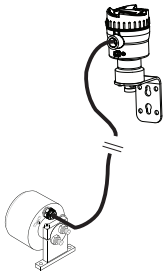

Figure 3-3 Remote version - M12 connection

Sensor design

All primary process measurement of massflow, volumeflow, density and process temperature are made in the DSL/sensor front end.

The sensor comprises one single continuous bended tube, with no internal welds. The sensor is available in an intrinsically safe (IS) design for hazardous area installations.

The sensors are available in AISI 316L stainless steel and Hastelloy C22. The enclosure is made of AISI 316L stainless steel.

The sensor enclosure can be equipped with a pressure guard or flushed with dry inert gas at the threaded ports for non-hazardous applications only.

In the remote configuration, the sensor front end (DSL) is available in an aluminum enclosure with an ingress protection grade of IP67/NEMA 4X. For communication and power supply a 4-wire connection can be made via M12 plug and socket or cable gland/conduit entry for cable termination.

Sensor overview

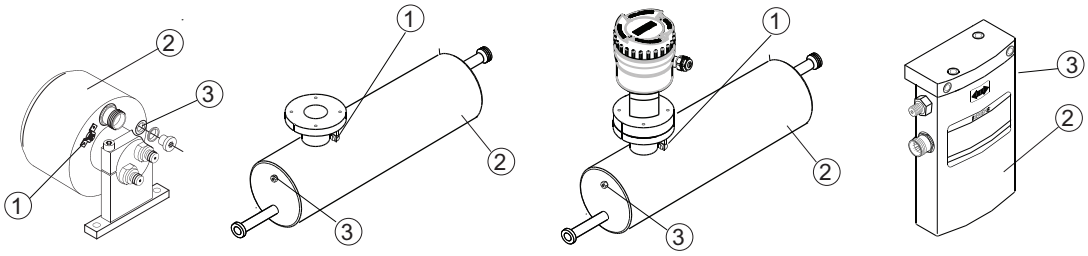

① Earthing terminal
② Sensor enclosure
③ Plug and threaded port for e.g. pressure guard

Figure 3-4 Overview, remote and compact configuration

3.6 Features

- The SITRANS FCT010 can be used as Modbus slave in stand-alone or parallel operation on Modbus or third party automation systems
- Compact sensor design
- High immunity against process noise
- Fast response to step changes in flow
- High update rate (100 Hz) on all process values
- Measurement of:
  - Massflow
  - Volumeflow
  - Density
  - Process media temperature
  - Frame temperature
- Independent low flow cut-off settings for massflow and volumeflow

- Automatic zero-point adjustment (initiated by host system)
- Process noise damping using digital signal processing (DSP).
- One totalizer for summation of massflow. The totalizer is reset on loss of power.
- Empty pipe monitoring
- Simulation of process values:
  - Massflow
  - Volumeflow
  - Density
  - Process media temperature
  - Frame temperature
- Troubleshooting and sensor checking
- Use in hazardous areas according to specification
- Intelligent filtering system for aerated flow
- Unit selection of process values and totalizer

3.7 Applications

Measurement of liquids and gases

SITRANS F C Coriolis mass flowmeters are designed for measurement of a variety of liquids and gases. The flowmeters are multi-parameter devices offering accurate measurement of massflow, volumeflow, density, temperature and, depending on product variants.

Main applications

The main applications of the Coriolis flowmeter can be found in all industries, such as:

- Chemical & Pharma: detergents, bulk chemicals, acids, alkalis, pharmaceuticals, blood products, vaccines, insulin production
- Food & Beverage: dairy products, beer, wine, soft drinks, fruit juices and pulps, bottling, CO_2 dosing, CIP/SIP-liquids, mixture recipe control
- Automotive: fuel injection nozzle & pump testing, filling of AC units, engine consumption, paint robots
- Oil & Gas: filling of gas bottles, furnace control, test separators, bore-hole plasticizer dosing, water-cut metering
- Water & Waste Water: dosing of chemicals for water treatment

3.8 Approvals

Note

For further details see Approvals (Page 127).

The device is available with approvals for general purpose and for hazardous areas. In all cases, check the nameplate on your device, and confirm the approval rating.

3.9 Theory of operation

The Coriolis principle of measurement

The flow measurement is based on the Coriolis law of motion. Particles moving in a rotating / oscillating system will resist imposed oscillations in a manner consistent with their mass and velocity (momentum). Oscillation produced by a Coriolis flowmeter where the process media is accelerated around bends results in phase distortions of the measuring tubes.

The SITRANS F C sensors are energized by an electromagnetic (voice coil) driver circuit which oscillates the pipes at their resonant frequency. Two pickups are placed symmetrically on either side of the driver to provide position signals for digital processing.

When the media flows through the sensor, Coriolis force will act on the measuring tubes and cause deflection which can be measured as a phase shift between Pickup 1 and Pickup 2. The phase shift is proportional to the mass flowrate.

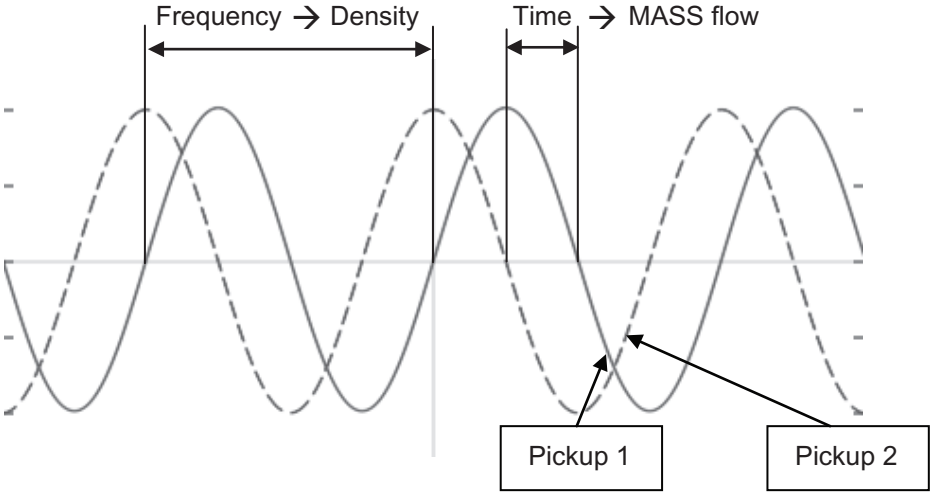

The frequency (or period) of the vibration is a direct function of the process media density.

The frequency and amplitude of the driver is regulated to ensure a stable output from the 2 pickups. The temperature of the sensor tubes is measured to provide accurate compensation for changes in the material stiffness. As a result the process media temperature is also accurately measured.

The flow proportional phase signal from the pickups, the temperature measurement and the driver frequency enable calculation and reporting of mass, density, volume, and temperature.

Digital signal processing (DSP)

The analog to digital conversion takes place in an ultra low noise sigma delta converter with high signal resolution. With fast digital signal processing massflow and density values are calculated using a patented DFT technology (Discrete Fourier Transformation). The combination of this patented DFT technology and the fast DSP enables short response time (< 10 ms) to changes in the measured values.

The built-in noise filter is configurable and can be used for improving the performance of the flowmeter, in case the installation and application conditions are not ideal. Typical process noise such as gas bubbles (two-phase-flow) can be reduced through the filter functions.

Installing/Mounting

4

This chapter gives detailed instructions on mounting the transmitter and sensor to take best advantage of the flexible arrangements built into the product, and to aid in planning the physical locations of the flowmeter parts.

With remote installations it is advisable to mount the transmitter in a location convenient for using the display, with a firm backing from a wall, beam or post.

If the process piping is subjected to high vibration, remote installation is recommended to shield the electronics from shaking.

Flow direction should always be the same as that shown by the arrow on the pedestal if possible.

4.1 Basic safety notes

⚠ CAUTION

Hot surfaces resulting from hot process media

Risk of burns resulting from surface temperatures above 70 °C (155 °F).

- Take appropriate protective measures, for example contact protection.
- Make sure that protective measures do not cause the maximum permissible ambient temperature to be exceeded. Refer to the information in Technical data (Page 111).

⚠ WARNING

Wetted parts unsuitable for the process media

Risk of injury or damage to device.

Hot, toxic and corrosive media could be released if the process medium is unsuitable for the wetted parts.

- Ensure that the material of the device parts wetted by the process medium is suitable for the medium. Refer to the information in Technical data (Page 111).

Note

Material compatibility

Siemens can provide you with support concerning selection of sensor components wetted by process media. However, you are responsible for the selection of components. Siemens accepts no liability for faults or failures resulting from incompatible materials.

WARNING

Unsuitable connecting parts

Risk of injury or poisoning.

In case of improper mounting hot, toxic and corrosive process media could be released at the connections.

- Ensure that connecting parts (such as flange gaskets and bolts) are suitable for connection and process media.

WARNING

Exceeded maximum permissible operating pressure

Risk of injury or poisoning.

The maximum permissible operating pressure depends on the device version, pressure limit and temperature rating. The device can be damaged if the operating pressure is exceeded. Hot, toxic and corrosive process media could be released.

Ensure that maximum permissible operating pressure of the device is not exceeded. Refer to the information on the nameplate and/or in Technical data (Page 111).

4.1.1 Incorrect mounting at Zone 0

WARNING

Incorrect mounting at Zone 0

Risk of explosion in hazardous areas.

- Ensure sufficient tightness at the process connection.
- Observe the standard IEC/EN 60079-14.

WARNING

Loss of explosion protection

Risk of explosion in hazardous areas if the device is open or not properly closed.

- Close the device as described in Installing/Mounting (Page 29).

⚠ CAUTION

External stresses and loads

Damage to device by severe external stresses and loads (e.g. thermal expansion or pipe tension). Process media can be released.

- Prevent severe external stresses and loads from acting on the device.

4.1.2 Installation location requirements

NOTICE

Strong vibrations

Damage to device.

- In plants with strong vibrations, mount the transmitter in a low vibration environment.

⚠ CAUTION

Aggressive atmospheres

Damage to device through penetration of aggressive vapors.

- Ensure that the device is suitable for the application.

⚠ CAUTION

Direct sunlight

Device damage.

The device can overheat or materials become brittle due to UV exposure.

- Protect the device from direct sunlight.
- Make sure that the maximum permissible ambient temperature is not exceeded. Refer to the information in Technical data (Page 111).

⚠ WARNING

Insufficient air supply

The device may overheat if there is an insufficient supply of air.

- Install the device so that there is sufficient air supply in the room.
- Observe the maximum permissible ambient temperature. Refer to the information in the section Technical data (Page 111).

4.1.3 Proper mounting

NOTICE
Incorrect mounting The device can be damaged, destroyed, or its functionality impaired through improper mounting. • Before installing ensure there is no visible damage to the device. • Make sure that process connectors are clean, and suitable gaskets and glands are used. • Mount the device using suitable tools. Refer to the information in Technical data (Page 111) for installation torque requirements.

⚠ CAUTION
Loss of type of protection Damage to device if the enclosure is open or not properly closed. The type of protection specified on the nameplate or in Technical data (Page 111) is no longer guaranteed. • Make sure that the device is securely closed.

4.2 Installation instructions

4.2.1 Sensor installation

4.2.1.1 Determining a location

⚠ CAUTION
Electromagnetic fields Do not install the flowmeter in the vicinity of strong electromagnetic fields, for example near motors, variable frequency drives, transformers etc.

Upstream / downstream

- No pipe run requirements, that is straight inlet/outlet sections are not necessary.
- Avoid long drop lines downstream from the sensor to prevent process media separation causing air / vapor bubbles in the tube (min. back pressure: 0.2 Bar).
- Avoid installing the flowmeter immediately upstream of a free discharge in a drop line.

Location in the system

The optimum location in the system depends on the application:

- Liquid applications
  Gas or vapor bubbles in the fluid may result in erroneous measurements, particularly in the density measurement.
  - Do not install the flowmeter at the highest point in the system, where bubbles will be trapped.
  - Install the flowmeter in low pipeline sections, at the bottom of a U-section in the pipeline.

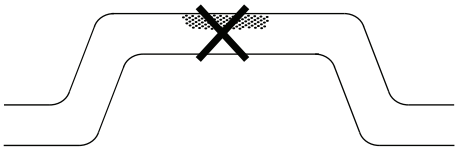

Figure 4-1 Liquid applications, wrong location with trapped air/gas

- Gas applications
  Vapor condensation or oil traces in the gas may result in erroneous measurements.
  - Do not install the flowmeter at the lowest point of the system.
  - Install a filter.

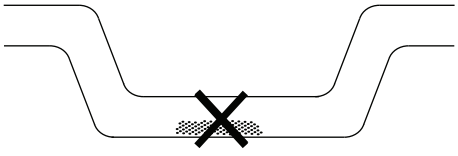

Figure 4-2 Gas applications, wrong location with trapped oil

4.2.1.2 Orientation of the sensor

Flow direction

The calibrated flow direction is indicated by the arrow on the sensor. Flow in this direction will be indicated as positive by default. The sensitivity and the accuracy of the sensor do not change with reverse flow.

The indicated flow direction (positive/negative) is configurable.

⚠ CAUTION
Accurate measurement The sensor must always be completely filled with process media in order to measure accurately.

Orienting the sensor

The sensor operates in any orientation. The optimal orientation depends on the process fluid and the process conditions. Siemens recommends orienting the sensor in one of the following ways:

MASS 2100 DI 1.0, DI 1.5 and DI 2.1

Liquid applications

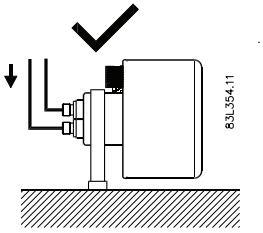

Horizontal installation, correct

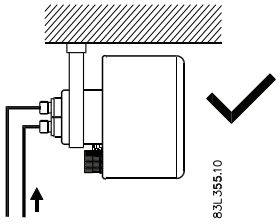

Horizontal installation, correct

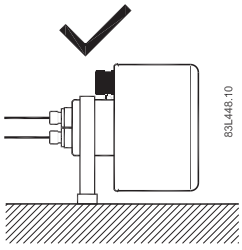

Vertical installation, correct (liquids without solid particles only)

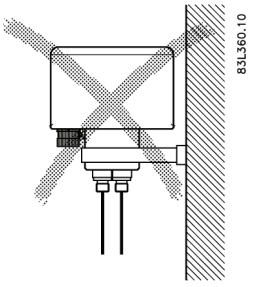

Vertical installation, wrong

Note

Air / gas bubbles in the liquid

Install the flowmeter horizontally

Note

Solid particles in the liquid

Install the flowmeter horizontally

Gas applications

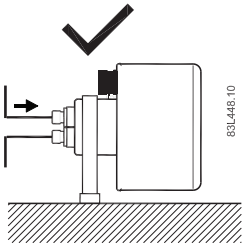

Horizontal installation 1

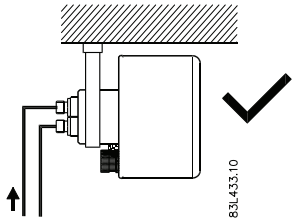

Horizontal installation 2

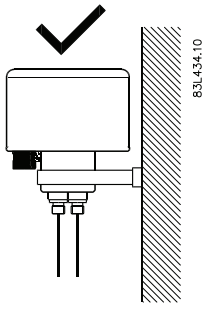

Vertical installation 1

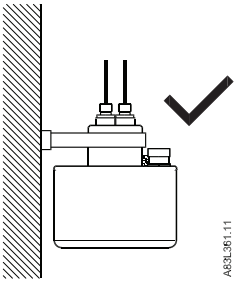

Vertical installation 2

Liquid applications

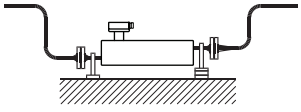

Horizontal installation, correct

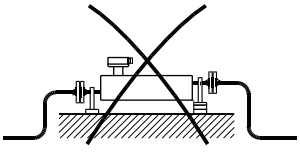

Horizontal installation, wrong

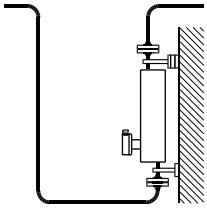

Vertical installation, correct

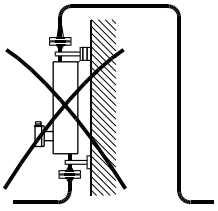

Vertical installation, wrong

Gas applications

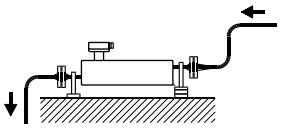

Horizontal installation

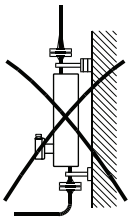

Vertical installation (not recommended)

Installation in a drop line

Installation in a dropline is only possible if a pipeline reduction or orifice with a smaller cross-section can be installed to prevent the sensor from being partially drained during the measurements.

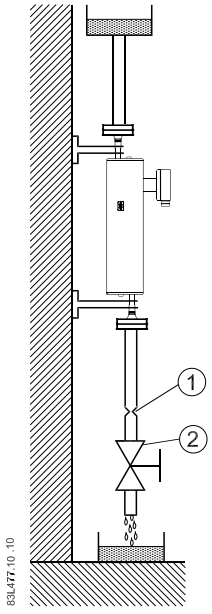

① Orifice Pipe
② Valve

Figure 4-3 Installation in drop line

WARNING

Unsuitable connecting parts

Risk of injury or poisoning.

In case of improper mounting hot, toxic and corrosive process media could be released at the connections.

- Ensure that connecting parts (such as flange gaskets and bolts) are suitable for connection and process media.

4.2.1.3 Mounting the sensor

- Install the sensor in well-supported pipelines in order to support the weight of the flowmeter.

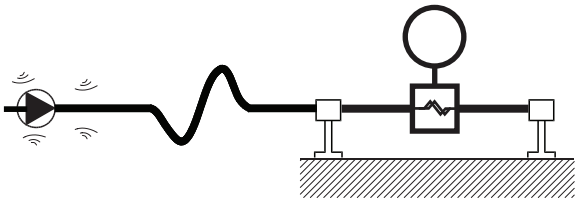

Figure 4-4 Avoid vibrations

- Center the connecting pipelines axially in order to assure a stress-free installation. The flowmeter must not be used to bring the rest of the pipework into line; make sure the pipework is correctly aligned before inserting the flow sensor.
- Install two supports or hangers symmetrically and stress-free on the pipeline in close proximity to the process connections.

Note

Handling

Never lift the flowmeter using the housing, that is always lift the sensor body.

Avoid vibrations

- Make sure that any valves or pumps upstream of the sensor do not cavitate and do not send vibrations into the sensor.
- Decouple vibrating pipeline from the flow sensor using flexible tube or couplings.

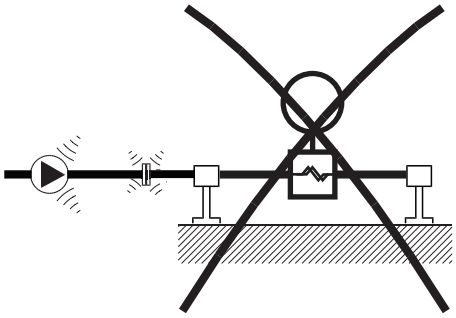

Figure 4-5 AvoNon-flexible pipes not recommended in vibrating environment

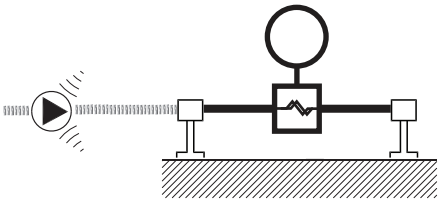

Figure 4-6 Flexible pipes recommended in vibrating environment

Avoid cross talk

If operating more than one flowmeter in one or multiple interconnected pipelines there is a risk of cross talk.

Prevent cross talk in one of the following ways:

- Mount sensors on separate frames
- Decouple the pipeline using flexible tube or couplings

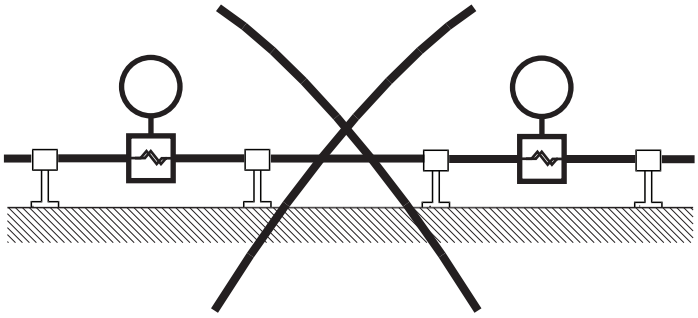

High risk of cross talk when using non-flexible pipes

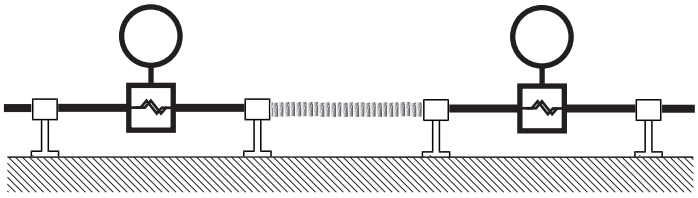

Low risk of cross talk when using flexible pipes and separate frames

4.2.1.4 Hydrostatic testing

The flowmeter is pressure-tested before delivery to 1.5 times the rated working pressure of the sensor.

- In the case of process connections pressure-rated less than 100 bar, the connection is the limiting component.
- In the case of process connections pressure-rated above 100 bar (stainless steel sensors) or above 160 bar (Hastelloy sensors), the sensor is the limiting component.

In all cases the maximum allowed hydrostatic test pressure (MATP) of the flowmeter is 1.5 times the marked MAWP (PS) at 20 °C.

Pressure test of a completed flow system with piping and other components can be done at pressures no higher than 1.5 times the marked MAWP (PS) at 20 °C of the lowest rated system component.

4.2.1.5 Process pipe connection

The process pipes can be mounted directly onto the process connections on the sensor. To obtain a proper scaling, use a wrench on the base of the process connections as counter lock to secure with the optimum torque.

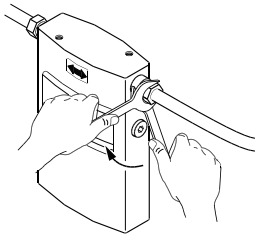

4.2.1.6 Mounting a pressure guard

⚠ CAUTION

Avoid moisture, liquids or particles getting into the sensor enclosure

All sensors are filled with argon to avoid condensation. Penetration of humidity, liquids or particles into the sensor may influence the measurement and in worst case affect the measuring function.

Install a pressure guard as follows:

1. Place the sensor in a dry, clean place and leave it to acclimatize until it reaches ambient temperature, preferred 20°C (68°F).
2. Carefully disconnect the nipple and mount the pressure guard. Use the enclosed spare part sealing ring for proper sealing.
3. Make sure that the pressure guard does NOT touch any of the parts inside the sensor.
4. Check that the pressure guard has been correctively mounted and thoroughly tightened. After dismantling the sealing ring must be replaced with a new sealing ring.

Pressure guards are not supplied with the sensor.

Before removing the nipple from the sensor enclosure, please note the following:

Penetration of humidity, liquids, or particles into the sensor must be avoided as it may influence the measurement and, in worst case, affect the measuring function. Influence, however, can be avoided using the following:

1. Place the sensor in a dry, clean place and leave it to acclimatize until it reaches ambient temperature, preferred 20°C (68°F).
2. Carefully remove the plug and mount the pressure guard. Use replacement soft metal sealing rings for proper sealing.
3. Check that the pressure guard has been correctly mounted and thoroughly tightened so that the sealing ring fits tightly. After each dismantling, the sealing ring must always be replaced by a new one.

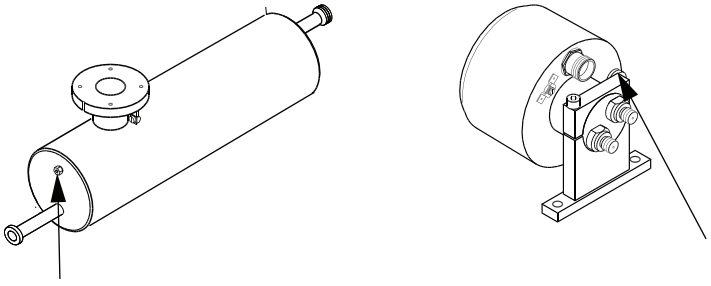

Principle

Pressure guard selection

Siemens does not supply the components of the pressure guard solution because the arrangement and components are closely related to individual safety and protection practices in each place.

The selection of pressure guard solution is the responsibility of the user, however Siemens recommends the following forms of pressure guard:

- A pressure switch screwed directly or piped into one of the purge ports and connected to an automatic shut-off valve will disable pressurized supply to the meter.
- A relief valve or bursting disc screwed directly or piped to one of the purge ports to carry any spilt fluid to drain after opening.

The pressure switch and relief valve set point should be 2-3 bar gauge. The pressure switch should be rated to withstand the full process pressure and temperature for a short time without rupture.

⚠ CAUTION
Drain flow
Ensure the drain flow is safely contained away from personnel and other plant or equipment.

Mounting of pressure guard

⚠ CAUTION

Moisture, liquids or particles getting into the sensor enclosure

All sensors are filled with argon to avoid condensation. Ingress of moisture, liquids or particles into the sensor may influence the measurement and in worst case inhibit the measuring function.

- Avoid moisture, liquids or particles getting into the sensor enclosure

Install a pressure guard as follows:

1. Place the sensor in a dry, clean place and leave it to acclimatize until it reaches ambient temperature, preferred 20°C (68°F) with low humidity (at least below 50% RH).
2. Orient the sensor with the purge ports uppermost to minimize loss of the argon gas filling.
3. Carefully remove the plug and mount the pressure guard.
   Use replacement soft metal sealing rings for proper sealing.

   ⚠ CAUTION

   Lack of proper sealing

   Soft metal sealing rings only maintain a hermetic seal within the enclosure with single use.

   - Ensure that soft metal sealing rings are not reused.

4. Make sure that the pressure guard does NOT touch any of the parts inside the sensor. Maximum of 20 mm (0.79") insertion can be accommodated.
5. Check that the pressure guard has been correctly mounted and thoroughly tightened.

   ⚠ WARNING

   Operation in proximity with pressure guards

   Prevent personal injuries by assuring that operation in close proximity with pressure guards cannot take place.

4.2.2 Transmitter installation

4.2.2.1 Mounting the DSL

Wall mounting

1. Mount bracket on a wall using four screws.

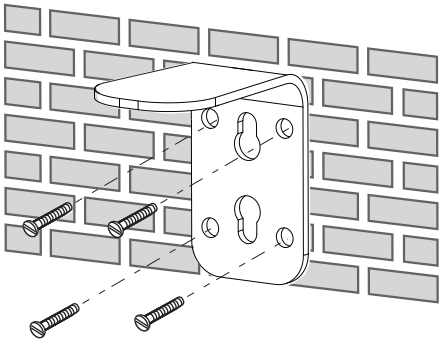

Figure 4-7 DSL mounting on wall

2. Mount DSL on mounting bracket.

Pipe mounting

1. Mount bracket on a horizontal or a vertical pipe using ordinary hose clips or duct straps.

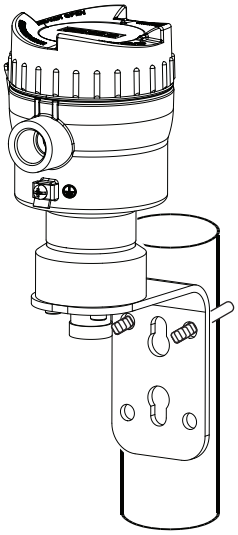

Figure 4-8 DSL mounting on vertical pipe

2. Mount DSL on mounting bracket.

4.3 Disassembly

⚠ DANGER

Pressure applications

Danger to personnel, system and environment will result from improper disassembly.

- Never attempt to loosen, remove, or disassemble process connection while vessel contents are under pressure.

⚠ WARNING

Incorrect disassembly

The following risks may result through incorrect disassembly:

- Injury through electric shock

- Risk through emerging media when connected to the process

- Risk of explosion in hazardous area

In order to disassemble correctly, observe the following:

- Before starting work, make sure that you have switched off all physical variables such as pressure, temperature, electricity etc. or that they have a harmless value.
- If the device contains hazardous media, it must be emptied prior to disassembly. Make sure that no environmentally hazardous media are released.
- Secure the remaining connections so that no damage can result if the process is started unintentionally.

Connecting

5

5.1 Basic safety notes

⚠ WARNING

Unsuitable cables, cable glands and/or plugs

Risk of explosion in hazardous areas.

- Use only cable glands/plugs that comply with the requirements for the relevant type of protection.
- Tighten the cable glands in accordance with the torques specified in Technical data (Page 111).
- Close unused cable inlets for the electrical connections.
- When replacing cable glands use only cable glands of the same type.
- After installation check that the cables are seated firmly.

⚠ WARNING

Incorrect conduit system

Risk of explosion in hazardous areas as result of open cable inlet or incorrect conduit system.

- In the case of a conduit system, mount a spark barrier at a defined distance from the device input. Observe national regulations and the requirements stated in the relevant approvals.

NOTICE

Condensation in the device

Damage to device through formation of condensation if the temperature difference between transportation or storage and the mounting location exceeds 20 °C (36 °F).

- Before taking the device into operation let the device adapt for several hours in the new environment.

NOTICE

Ambient temperature too high

Damage to cable sheath.

- At an ambient temperature ≥ 60 °C (140 °F), use heat-resistant cables suitable for an ambient temperature at least 20 °C (36 °F) higher.

WARNING

Improper power supply

Risk of explosion in hazardous areas as result of incorrect power supply, e.g. using direct current instead of alternating current.

- Connect the device in accordance with the specified power supply and signal circuits. The relevant specifications can be found in the certificates, in Technical data (Page 111) or on the nameplate.

WARNING

Unsafe extra-low voltage

Risk of explosion in hazardous areas due to voltage flashover.

- Connect the device to an extra-low voltage with safe isolation (SELV).

WARNING

Lack of equipotential bonding

Risk of explosion through compensating currents or ignition currents through lack of equipotential bonding.

- Ensure that the device is potentially equalized.

Exception: It may be permissible to omit connection of the equipotential bonding for devices with type of protection "Intrinsic safety Ex i".

WARNING

Unprotected cable ends

Risk of explosion through unprotected cable ends in hazardous areas.

- Protect unused cable ends in accordance with IEC/EN 60079-14.

WARNING

Improper laying of shielded cables

Risk of explosion through compensating currents between hazardous area and the non-hazardous area.

- Shielded cables that cross into hazardous areas should be grounded only at one end.
- If grounding is required at both ends, use an equipotential bonding conductor.

WARNING

Insufficient isolation of intrinsically safe and non-intrinsically safe circuits

Risk of explosion in hazardous areas.

- When connecting intrinsically safe and non-intrinsically safe circuits ensure that isolation is carried out properly in accordance with local regulations for example IEC 60079-14.
- Ensure that you observe the device approvals applicable in your country.

WARNING

Connecting device in energized state

Risk of explosion in hazardous areas.

- Connect devices in hazardous areas only in a de-energized state.

Exceptions:

- Devices having the type of protection "Intrinsic safety Ex i" may also be connected in energized state in hazardous areas.
- Exceptions for type of protection "Non-sparking nA" (Zone 2) are regulated in the relevant certificate.

WARNING

Connecting device in energized state

Risk of explosion in hazardous areas.

- Connect devices in hazardous areas only in a de-energized state.

Exceptions:

- Devices having the type of protection "Intrinsic safety Ex i" may also be connected in energized state in hazardous areas.
- Exceptions for type of protection "Increased safety ec" (Zone 2) are regulated in the relevant certificate.

WARNING

Incorrect selection of type of protection

Risk of explosion in areas subject to explosion hazard.

This device is approved for several types of protection.

1. Decide in favor of one type of protection.
2. Connect the device in accordance with the selected type of protection.
3. In order to avoid incorrect use at a later point, make the types of protection that are not used permanently unrecognizable on the nameplate.

Note

Electromagnetic compatibility (EMC)

You can use this device in industrial environments, households and small businesses.

For metal housings there is an increased electromagnetic compatibility compared to high-frequency radiation. This protection can be increased by grounding the housing, see Basic safety notes (Page 45).

Note

Improvement of interference immunity

- Lay signal cables separate from cables with voltages > 60 V.
- Use cables with twisted wires.
- Keep device and cables at a distance from strong electromagnetic fields.
- Take account of the conditions for communication specified in the Technical data (Page 111).
- HART: Use shielded cables to guarantee the full specification according to HART.

5.2 Connecting the MASS2100/FC300

This chapter describes how the device is connected and integrated into a Modbus network in a point-to-point or multidrop configuration.

5.2.1 Warnings

⚠ WARNING

Improper handling

The sensor connected to this device can be operated with high pressure and corrosive media. Therefore improper handling of the device can lead to serious injuries and/or considerable material damage.

Note

End Of Line (EOL) termination

The FCT010 EOL termination DIP switch is default set to EOL active. To change termination setting see Warnings (Page 48).

The device is provided with a preformed cable terminated with M12 style stainless steel weather-proof plugs.

The cable screen is physically and electrically terminated within the body of the plug.

Take care when handling the cable and passing it through cable ducting that the plug is not subjected to excessive tension (pulling) as the internal connections may be disengaged.

Note

Never pull the cable by the plug - only by the cable itself.

1. Connect the device using the supplied 4-wire cable with M12 connectors.

   Note
   Grounding

   The sensor cable screen is electrically connected to chassis, only when the M12 plug is correctly tightened.

Terminal number	Description	Wire color (Siemens cable)
1	0+	Orange
2	0 V	Yellow
3	RS485 / B	White
4	RS485 / A	Blue

Cable specifications

- Only use cables with at least the same degree of protection as the sensor to install the sensor. It is recommended to use cables supplied by Siemens A/S, Flow Instruments.
- Siemens supplied cables can be ordered with M12 plug on both ends or without plug.
- To guarantee the IP67 degree of protection, ensure that both ends of the cables are given equivalent protection from ingress of moisture.
- For further information on Siemens-supplied cables, see Technical Data.

⚠ WARNING

Cable requirements

Cables must be suitable for the temperature (at least 70 °C) and be flammability-rated to at least V-2.

A: Prepare the cable by stripping it at both ends.

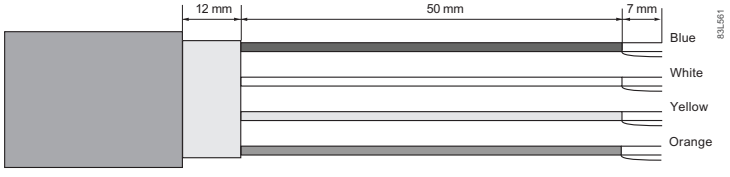

Figure 5-1 Cable end

B: Connect wires within the sensor terminal compartment

1. Remove the lock screw and remove the lid.
2. Undo the flexible strap.
3. Disconnect the sensor connection (white plug) from the electronic.
4. Loosen the mounting screw using a TX10 Torx driver and remove the electronic from the housing.
5. Remove the cap and the ferrule from the cable gland and slide onto the cable.
6. Push the cable through the open gland and anchor the cable shield and the wires with the clamp bar.
7. Remove the terminal block from the electronic.
8. Connect the wires to the terminals according to the list below.

Terminal number	Description	Wire color (Siemens cable)
1	0+	Orange
2	0 V	Yellow
3	RS485 / B	White
4	RS485 / A	Blue

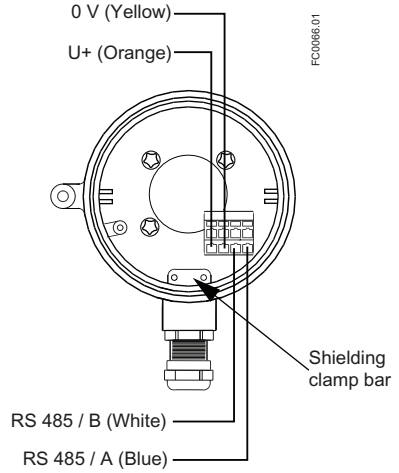

Figure 5-2 Sensor terminal compartment

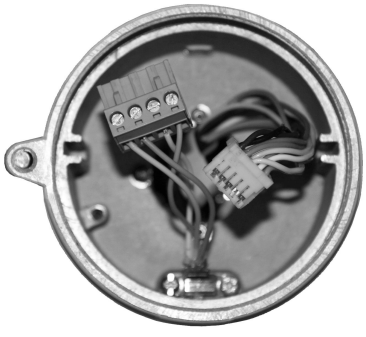

9. Reinstall the electronic including the mounting screw.

10. Connect the sensor connection and the sensor cable.
11. Restore the flexible strap around all wires.

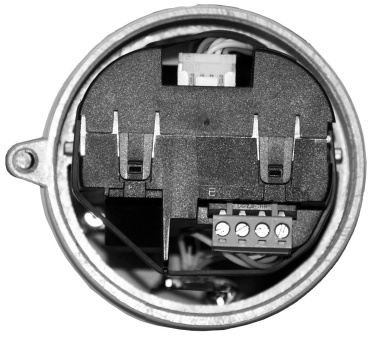

12. Assemble and tighten the cable gland.
13. Remove the O-ring from lid.
14. Reinstate the lid and screw in until the mechanical stop. Wind back the lid by one turn.
15. Mount the O-ring by pulling it over the lid and tighten the lid until you feel friction from the O-ring on both sides. Wind the lid by one quarter of a turn to seal on the O-ring.
16. Reinstate and tighten the lid lock screw.

⚠ WARNING

Unprotected cable ends

Risk of explosion through unprotected cable ends in hazardous areas.

- Protect unused cable ends in accordance with IEC/EN 60079-14.

It is important to terminate the Modbus RS 485 line correctly at the start and end of the bus segment since impedance mismatch results in reflections on the line which can cause faulty communication transmission.

If the device is at the end of the bus segment, it is recommended to terminate the device. The table below shows the relation between the DIP switch settings and the permissible communication interface set-ups. Default configuration is EOL active.

Location of DIP switch

The DIP switch is located in the electronic as shown below.

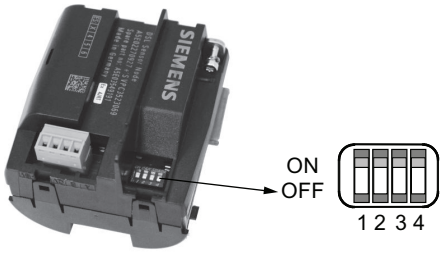

Figure 5-3 DIP switch location (all set to ON)

DIP switch settings for communication set-up

DIP switch Communi-cation set-up	Switch 1	Switch 2	Switch 3	Switch 4
EOL active	On	On	On	On
EOL not active	On	On	Off	Off

NOTICE
Avoid DIP switch settings not mentioned in the table!
DIP switch settings not mentioned in the table above are not allowed and may reduce communication interface reliability.

5.3 Wiring information

5.3.1 Wiring in hazardous areas

Hazardous area applications

Special requirements apply to the location and interconnection of sensor and transmitter. See Installation in hazardous areas (Page 16).

⚠ WARNING
Transmitter housing
Before opening the terminal box check that: • No explosion hazard exists • All connection leads are potential free

5.4 Device nameplates

Each part of the FC Coriolis flowmeter has three nameplate types showing the following information:

- product identification
- product specifications
- certificates and approvals

Note

Identification

Identify your device by comparing your ordering data with the information on the product and specification nameplates.

With compact versions, the transmitter and sensor product identifications are both given as 'Coriolis flowmeter SITRANS FCT010' or 'SITRANS FCT030' and sensors 'MASS2100 or 'FC300'.

With remote versions, the transmitter is identified as 'SITRANS FCT030' or 'SITRANS FCT010' or 'SIFLOW' and the sensors as 'SITRANS FC MASS2100' or 'FC300'.

5.4.1 Transmitter identification nameplate

FCT010 transmitter identification nameplate

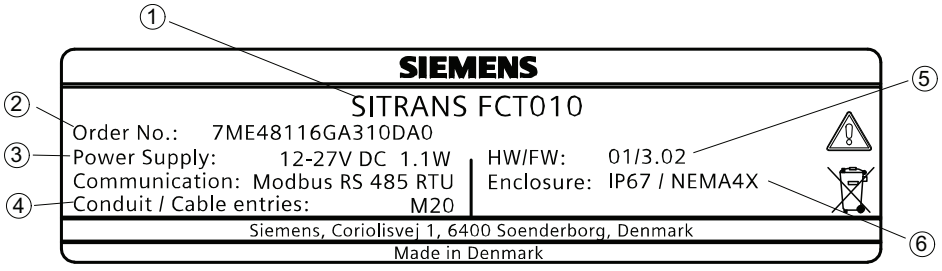

①	Product name	Transmitter product name
②	Order no.	Order number
③	Power Supply	Power supply
④	Conduit / cable entries	Type of conduit / cable entries
⑤	System revisions	System revision numbers; firmware (FW) and hardware (HW)
⑥	Enclosure IP	Degree of protection

5.4.2 Transmitter specification nameplate

FCT010 transmitter specification nameplate

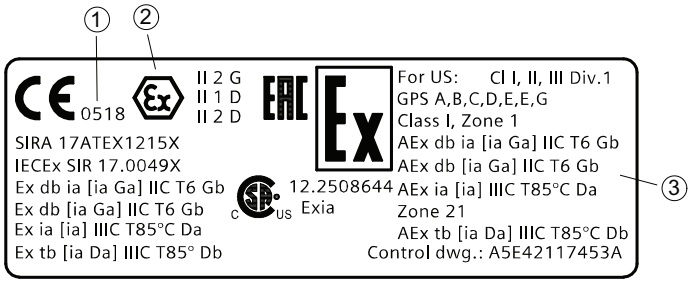

①	0518	ATEX Notified Body ID (SIRA Certification)
②	Ex	Ex mark
③	Ex approvals	Ex approval specifications for the transmitter (ATEX example; for details on all approvals refer to Approvals (Page 127))

Note

Approval identifications

Approval certificates and notified body identifications are available for download at www.siemens.com (http://support.automation.siemens.com/WW/view/en/60666565/134200).

MASS2100 sensor identification nameplate

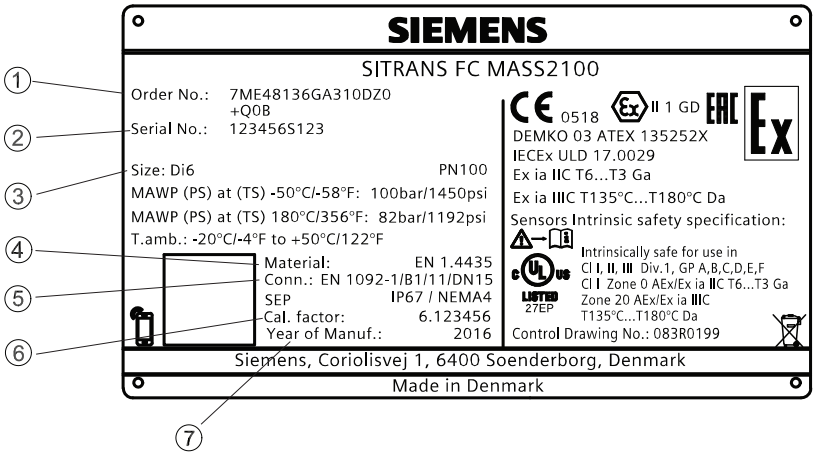

①	Order number	Device specific order number
②	Serial number	Device specific serial number
③	Size DN	Nominal size
④	Material	Material of the pipe
⑤	Connection	Process connector
⑥	Cal. factor	Device specific calibration factor
⑦	PT / Year	Test pressure and time stamp

Figure 5-4 MASS2100 identification nameplate example (new drawing of late incl. SGD address)

Flowmeter serial number construction

The flowmeter serial number is constructed as follows:

PPPYMDDxxxxxx

where
PPP = Production factory (Siemens Flow Instruments: FDK)
Y = Production year (for encryption, see below)
M = Production month (for encryption, see below)
DD = Production date (for encryption, see below)
xxxxxx = Sequential number

Encryption:

Calendar year (Y)	Code
1950, 1970, 1990, 2010	A
1951, 1971, 1991, 2011	B
1952, 1972, 1992, 2012	C
1953, 1973, 1993, 2013	D
1954, 1974, 1994, 2014	E
1955, 1975, 1995, 2015	F
1956, 1976, 1996, 2016	H (G)
1957, 1977, 1997, 2017	J
1958, 1978, 1998, 2018	K

1959, 1979, 1999, 2019	L
1960, 1980, 2000, 2020	M
1961, 1981, 2001, 2021	N
1962, 1982, 2002, 2022	P
1963, 1983, 2003, 2023	R
1964, 1984, 2004, 2024	S
1965, 1985, 2005, 2025	T
1966, 1986, 2006, 2026	U
1967, 1987, 2007, 2027	V
1968, 1988, 2008, 2028	W
1969, 1989, 2009, 2029	X
Month (M)	**Code**
January	1
February	2
March	3
April	4
May	5
June	6
July	7
August	8
September	9
October	O
November	N
December	D
Date (DD)	**Code**
Day 1 to 31	01 to 31 (corresponding to the actual date)

5.4.3 Sensor identification nameplate FC300

FC300 sensor identification nameplate

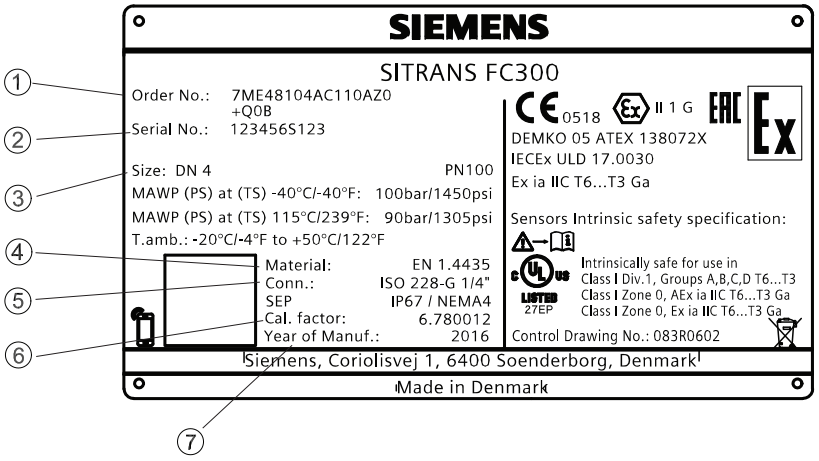

①	Order number	Device specific order number
②	Serial number	Device specific serial number
③	Size DN	Nominal size
④	Material	Material of the pipe
⑤	Connection	Process connector
⑥	Cal. factor	Device specific calibration factor
⑦	PT / Year	Test pressure and time stamp

Figure 5-5 SITRANS FC300 identification nameplate example

Commissioning 6

6.1 Chapter oveview

In this chapter it is described how to commission the device via the local display using the Quick commissioning wizard.

6.2 Basic safety notes

⚠ WARNING

Improper commissioning in hazardous areas

Device failure or risk of explosion in hazardous areas.

- Do not commission the device until it has been mounted completely and connected in accordance with the information in Installing/Mounting (Page 29).
- Before commissioning take the effect on other devices in the system into account.

⚠ WARNING

Commissioning and operation with pending error

If an error message appears, correct operation in the process is no longer guaranteed.

- Check the gravity of the error.
- Correct the error.
- If the error still exists:
  - Take the device out of operation.
  - Prevent renewed commissioning.

⚠ CAUTION

Loss of type of protection

Damage to device if the enclosure is open or not properly closed. The type of protection specified on the nameplate or in Technical data (Page 111) is no longer guaranteed.

- Make sure that the device is securely closed.

⚠ DANGER

Toxic gases and liquids

Danger of poisoning when venting the device: if toxic process media are measured, toxic gases and liquids can be released.

- Before venting ensure that there are no toxic gases or liquids in the device, or take the appropriate safety measures.

⚠ WARNING

Loss of explosion protection

Risk of explosion in hazardous areas if the device is open or not properly closed.

- Close the device as described in Installing/Mounting (Page 29).

⚠ WARNING

Opening device in energized state

Risk of explosion in hazardous areas

- Only open the device in a de-energized state.
- Check prior to commissioning that the cover, cover locks, and cable inlets are assembled in accordance with the directives.

Exception: Devices having the type of protection "Intrinsic safety Ex i" may also be opened in energized state in hazardous areas.

6.2.1 Warnings

⚠ CAUTION

Sensor and transmitter ordered separately

If the sensor and the transmitter are ordered separately, a "Set To Default" routine must be performed. This can be done via SIMATIC PDM.

⚠ WARNING

Improper handling

The sensor connected to this device can be operated with high pressure and corrosive media. Therefore improper handling of the device can lead to serious injuries and/or considerable material damage.

6.3 General requirements

Before commissioning it must be checked that:

- The device has been installed and connected in accordance with the guidelines provided in Installing/Mounting (Page 29) and Connecting (Page 45).
- Device installed in hazardous areas meets the requirements described in Installation in hazardous areas (Page 16).

6.4 Local commissioning

6.4.1 Power-up

Power up the device. Devices with local display show a screen for initial startup.

6.4.2 Initial startup

The first time the device is powered up, you will be prompted to set the language. The device always starts up showing "Language" in English. When the language has been set, you will be prompted to set the date and time.

Before using the flow meter for the first time, essential parameters should be considered. After confirming/changing date and time you can choose to accept the default values or start the Quick commissioning wizard.

You will be asked if you want to start the "Quick commissioning" wizard. If you choose "Yes" (recommended), the "Quick commissioning" wizard will start. If you choose "No", you accept the default values of the device, and the next HMI view will be the operation view 1.

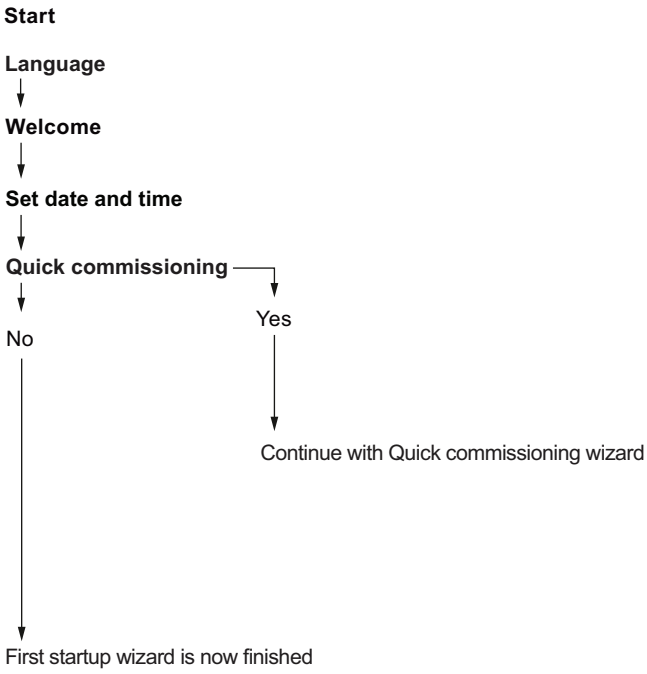

Text	Options/description
Language	Set the language: English, Deutsch
Welcome	Information about the "Quick commissioning" wizard
Set date and time	The set date and time (real time clock) is used for all time stamps of logged information.
Quick commissioning	The "Quick commissioning" wizard comprises the most important parameters/menus for quick configuration of the flowmeter.

6.5 Commissioning with PDM

⚠ WARNING

Commissioning and operation with pending error

If an error message appears, correct operation in the process is no longer guaranteed.

- Check the gravity of the error.
- Correct the error.
- If the error still exists:
  - Take the device out of operation.
  - Prevent renewed commissioning.

6.5.1 Operating via SIMATIC PDM

SIMATIC PDM is a software package used to commission and maintain process devices.

See also

www.siemens.com/simatic-pdm (www.siemens.com/simatic-pdm)

6.5.2 Functions in SIMATIC PDM

SIMATIC PDM monitors the process values, alarms and status signals of the device. It allows you to display, compare, adjust, verify, and simulate process device data; also to set schedules for calibration and maintenance.

Parameters are identified by name and organized into function groups. See Modbus addressing model (Page 155) for more details.

See Parameters accessed via drop-down menus (Page 76) for parameters that do not appear in the menu structure in SIMATIC PDM.

6.5.3 Commissioning steps

In the following it is described how to commission the device with SIMATIC PDM.

The steps are divided into the following sections:

1. Initial setup (Page 63)
2. Adding device to the communication network (Page 65)
3. Configuring a new device (Page 66).
4. Wizard - Quick start with PDM (Page 67)
5. Wizard - Zero point adjustment

6.5.4 Initial setup

To ensure that SIMATIC PDM connects properly, please complete the two processes outlined below:

1. Deactivating buffers
2. Updating the Electronic Device Description (EDD)

Deactivating buffers for RS 485 COM port

This deactivation is required to align SIMATIC PDM with the Modbus modem for Windows® operating systems.

Note

Support for Windows operating systems can be found here: support.automation.siemens.com (http://support.automation.siemens.com)

1. Click **Start → Control Panel** to begin configuration.
2. Click on **Hardware and Sound** and then on **Device Manager**.
3. Open **Ports** folder and double-click the COM Port used by the system to open the **Communications Port Properties** window.
4. Select the **Port Settings** tab and click the **Advanced** button.
5. If the **Use FIFO buffers** check box is deselected, click to select.
6. Set Receiver Buffer and Transmitter Buffer to Low (1).

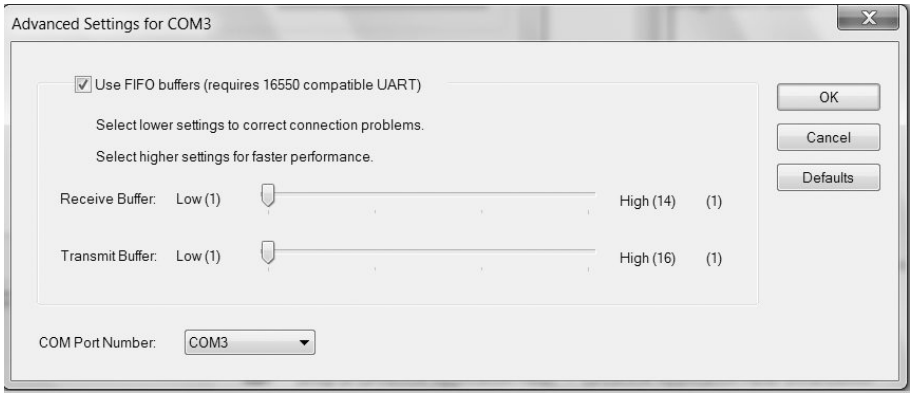

7. Click **OK** to close out. Close all screens and then reboot.

Updating the Electronic Device Description (EDD)

You can locate the EDD in the SIMATIC PDM Device Library under **Devices → Modbus → Sensors → Flow → Coriolis → Siemens AG → SITRANS FC**. Check the product page of our website at: (www.siemens.com/FC410), under Downloads, to make sure you have the latest version of SIMATIC PDM, the most recent Service Pack (SP) and the most recent hot fix (HF).

Installing a new EDD:

1. Download the EDD from the product page of our website at: (www.siemens.com/FC410) and save the files to your computer.
2. Extract the zipped file to an easily accessed location.
3. Launch the SIMATIC PDM Device Integration Manager, browse to the unzipped EDD file and select it.

6.5.5 Adding device to communication network

Before setting the parameters, it is necessary to configure the transmitter project in PDM.

1. Add the device to SIMATIC Modbus network:
   - Select **File → New**
     Type in a project name, for example *FC commissioning*.
   - Go to **View** and select **Process Device Network** view.
   - Right-click on the typed in *Project name* and select **Insert New Object → Networks**.
   - Right-click on **Networks** and **Insert New Object → Communication Network**.
   - Click on **Assign Device Type** and select **Modbus Network**.
     Click **OK** two times. Your PC is now added to the Modbus Network.
   - Right-click **Modbus Network** and select **Insert New Object → Object**.
   - Click on **Assign Device Type**, and select **Devices → Modbus → Sensors → Flow → Coriolis → SIEMENS AG → SITRANS FC**
     Click **OK** two times.

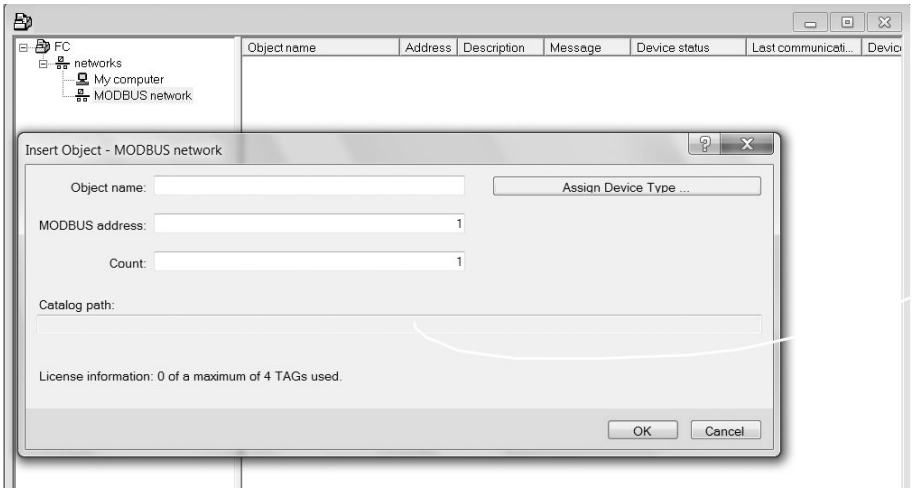

Figure 6-1 Assigning Modbus device to network

2. Set up the communication parameters for SIMATIC Modbus network:
   - Select **Networks → My computer**, right-click on **COM Port Interface** and select **Object Properties**.

– Select the **Communication** tab and configure the communication parameters. The transmitters default settings are:
 - Transmission rate: 19200 baud
 - Parity: even

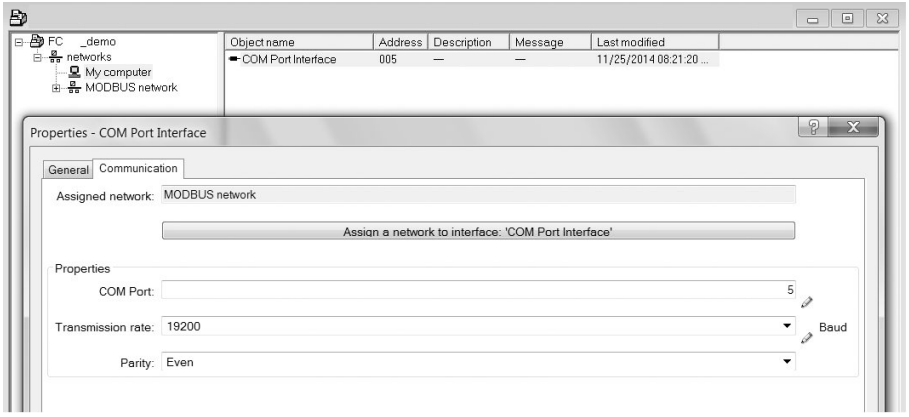

Figure 6-2 Modbus net object properties

– Click **OK.**

3. Set up the COM interface:
   – Select **Modbus Networks**.
   – Right-click on the object name **SITRANS FC** and select **Object Properties**.
   – Select the **Communication** tab and configure the Modbus address.

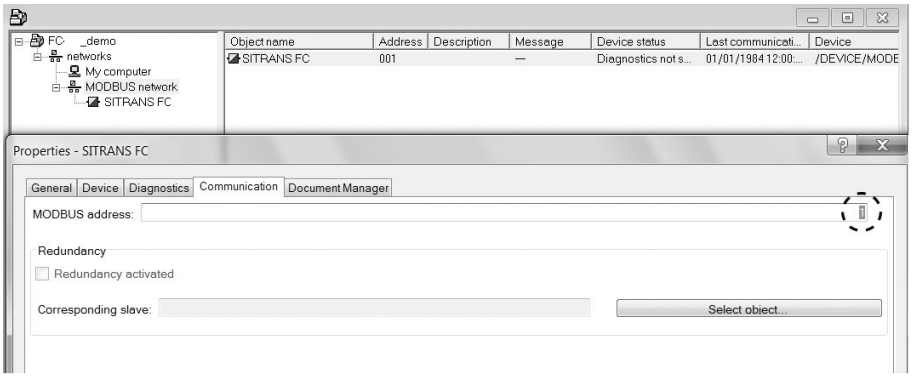

Figure 6-3 Set the Modbus address

– Click **OK.**

6.5.6 Configuring a new device

Note

Clicking on **Cancel** during an upload from device to SIMATIC PDM will result in some parameters NOT being updated.

1. Check that you have the most recent EDD, and if necessary update it, see Updating the Electronic Device Description (EDD) in Initial setup (Page 63).
2. Launch SIMATIC Manager.
3. Right-click on **SITRANS FC** and select **Open Object** to open SIMATIC PDM.
4. Click on **Device** and select **Upload to PG/PC Wizard...** to configure the device.

See also

Wizard - Quick Start via PDM (Page 67)

6.5.7 Wizard - Quick Start via PDM

The graphic Quick Start Wizard provides an easy 5-step procedure that configures the device for a simple application.

Please consult the SIMATIC PDM operating instructions or online help for details on using SIMATIC PDM.

Access level control

The parameters are protected against changes by access level control. To gain access, select **Access Management** from the device menu, select **User** and enter the PIN code.

The default user PIN code is 2457.

Quick start

Note

- The Quick Start wizard settings are inter-related and changes apply only after you click on **Apply and Transfer** at the end of step 5 to save settings offline and transfer them to the device.

- Do not use the Quick Start Wizard to modify individual parameters.

- Click on **Back** to return and revise settings or **Cancel** to exit the Quick Start.

Launch SIMATIC PDM, open the menu **Device → Wizard - Quick Start**..., and follow steps 1 to 5.

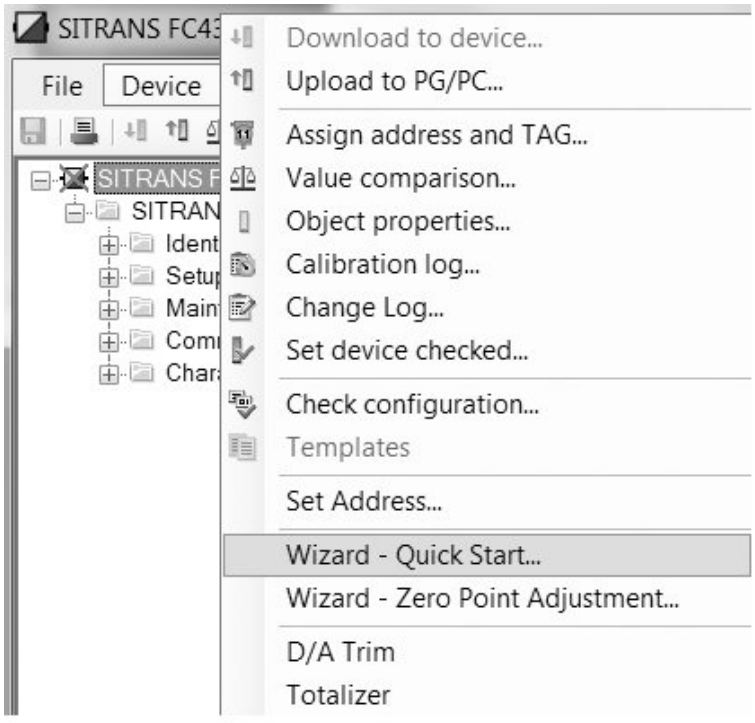

Step 1 - Identification

Note

The layout of the dialog boxes shown may vary according to the resolution setting for your computer monitor. The recommended resolution is 1280 x 960.

1. Click on **Read Data from Device** to upload Quick Start parameter settings from the device to the PC/PG and ensure PDM is synchronized with the device.
2. Click on **Next** to accept the default values. (**Descriptor**, **Message**, and **Date** fields can be left blank.)

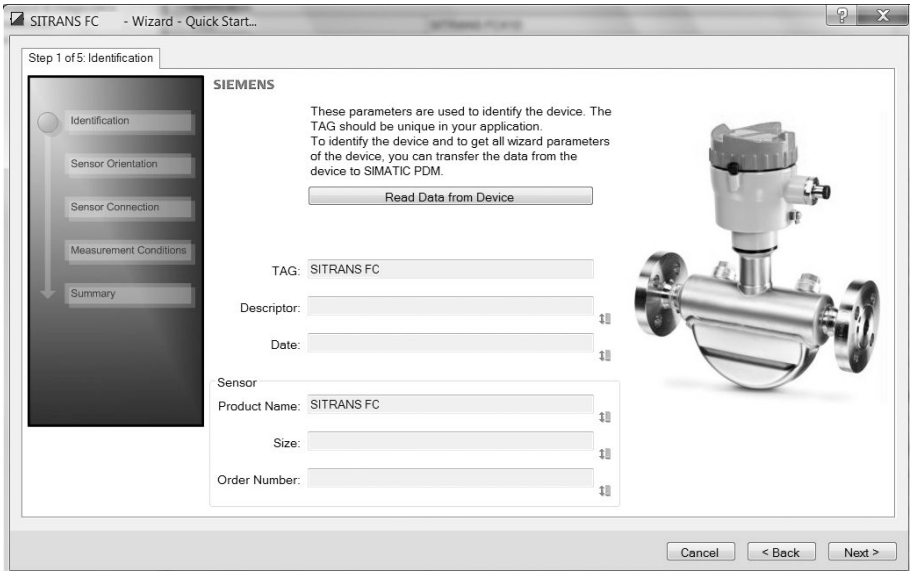

Figure 6-4 Quick start step 1

Step 2 - Sensor orientation

Step 2 shows an overview of the various recommended installation orientations depending on the application.

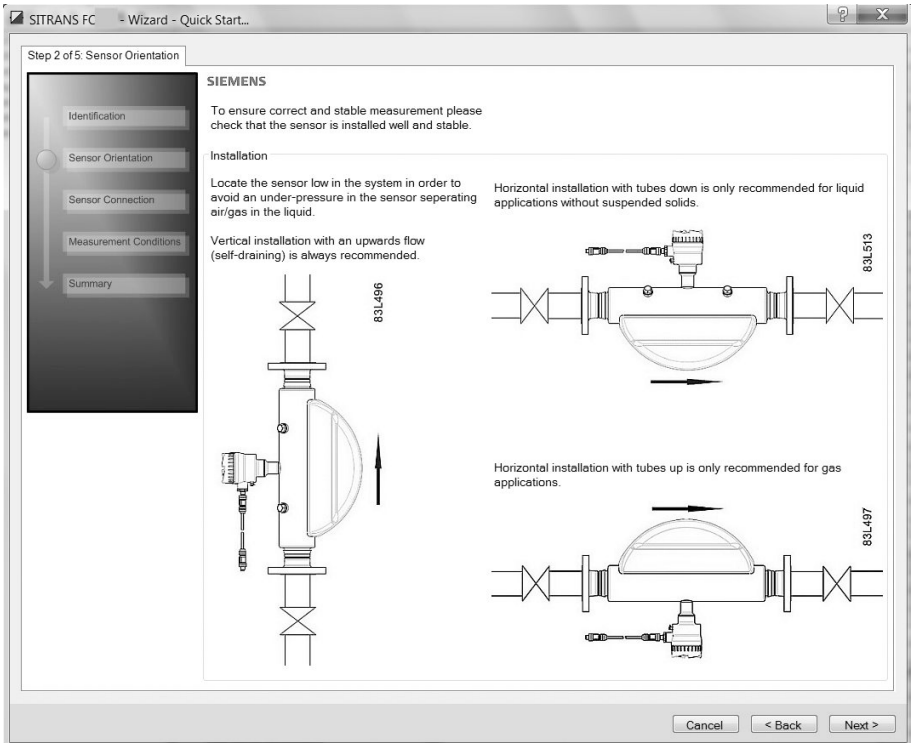

Figure 6-5 Quick start step 2

Step 3 - Sensor connection

The transmitter can be ordered with M12 connection or with terminated cable (for example conduit connections).

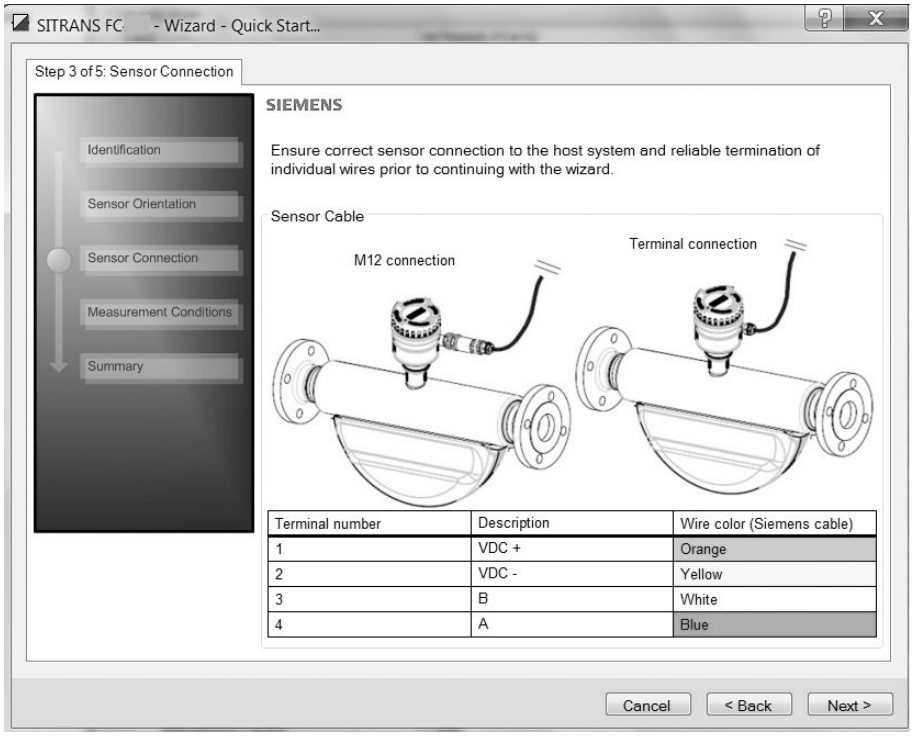

Figure 6-6 Quick start step 3

Step 4 - Measurement conditions

Configure the measurement conditions for the selected process variables. Change **Flow Direction** if necessary.

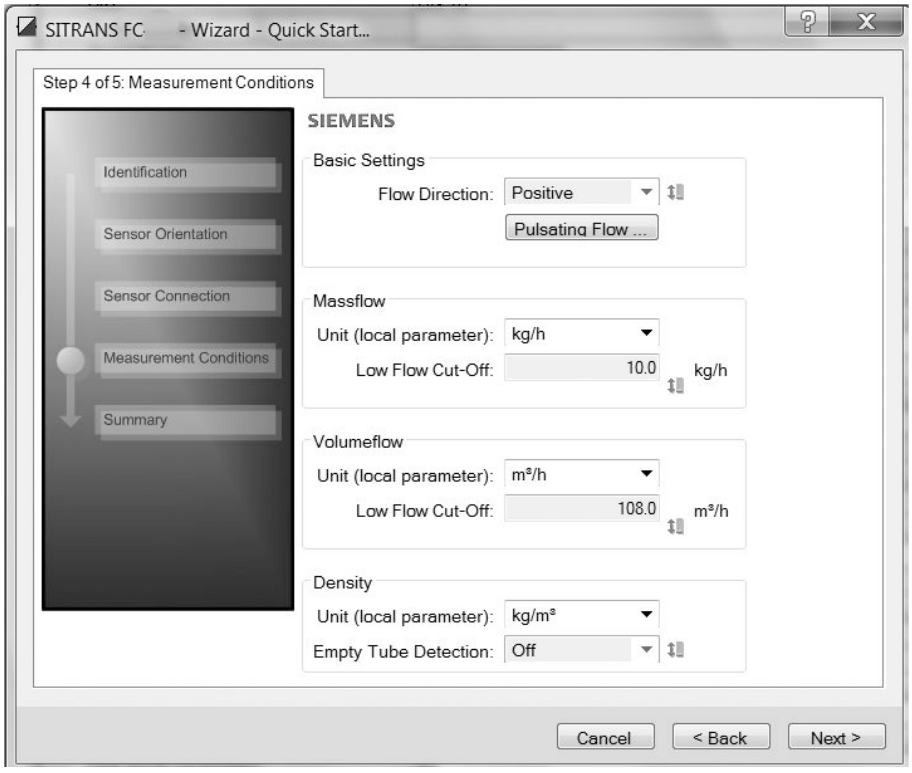

Figure 6-7 Quick start step 4

Reduce the sensitivity of the flow measurement signal by clicking on the **Pulsating Flow** button and selecting the appropriate filter.

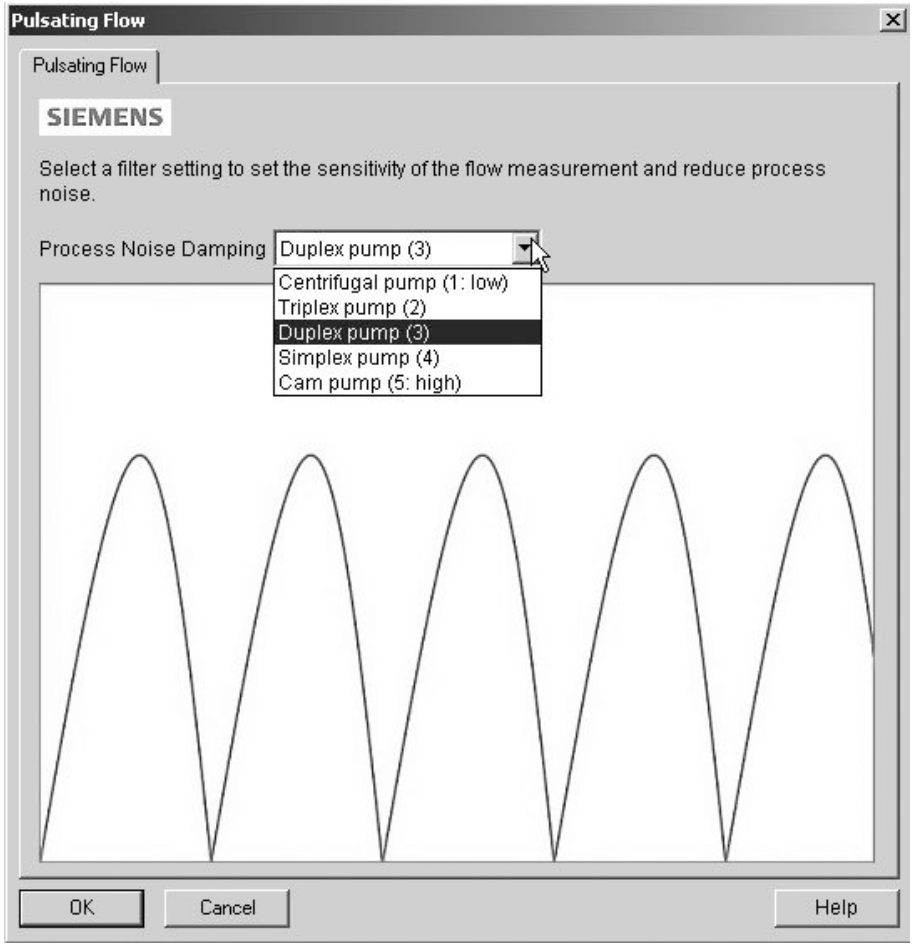

Figure 6-8 Filter setting selection

Step 5 - Summary

Check parameter settings, and click on **Back** to return and revise values, **Apply** to save settings offline, or **Apply and Transfer** to save settings offline and transfer them to the device.

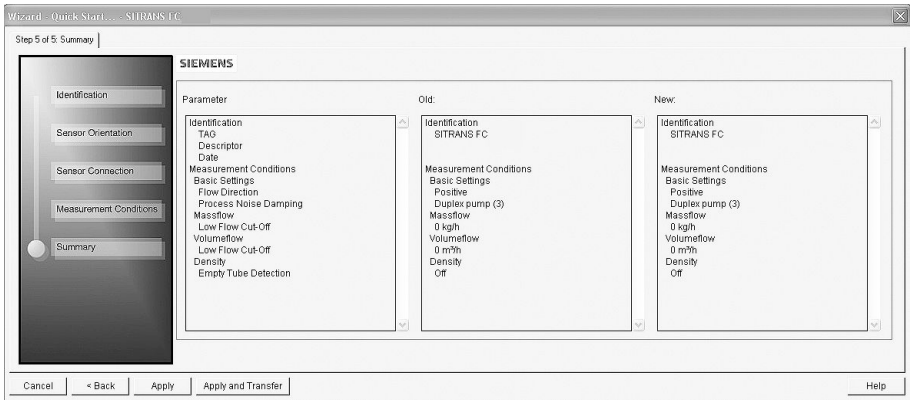

Figure 6-9 Quick start step 5

The message **Quick Start was successful** will appear. Click on **OK**.

See also

Configuring a new device (Page 66)

6.5.8 Wizard - Zero Point adjustment

Open the menu **Device → Wizard → Zero Point Adjustment**.

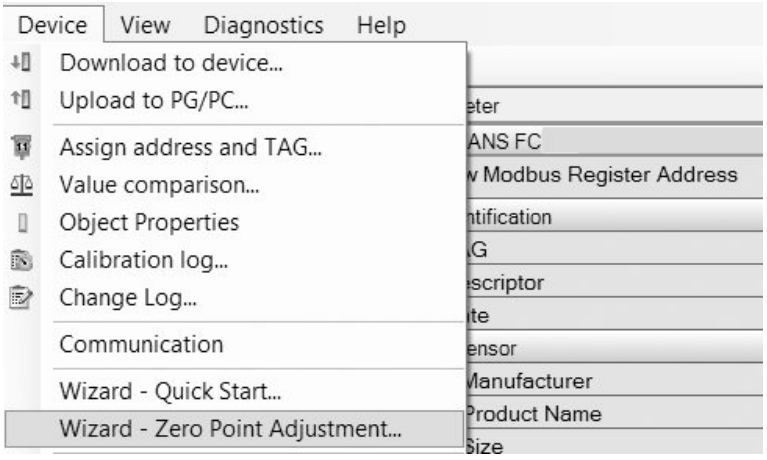

Select **Auto**. Click on **Next**.

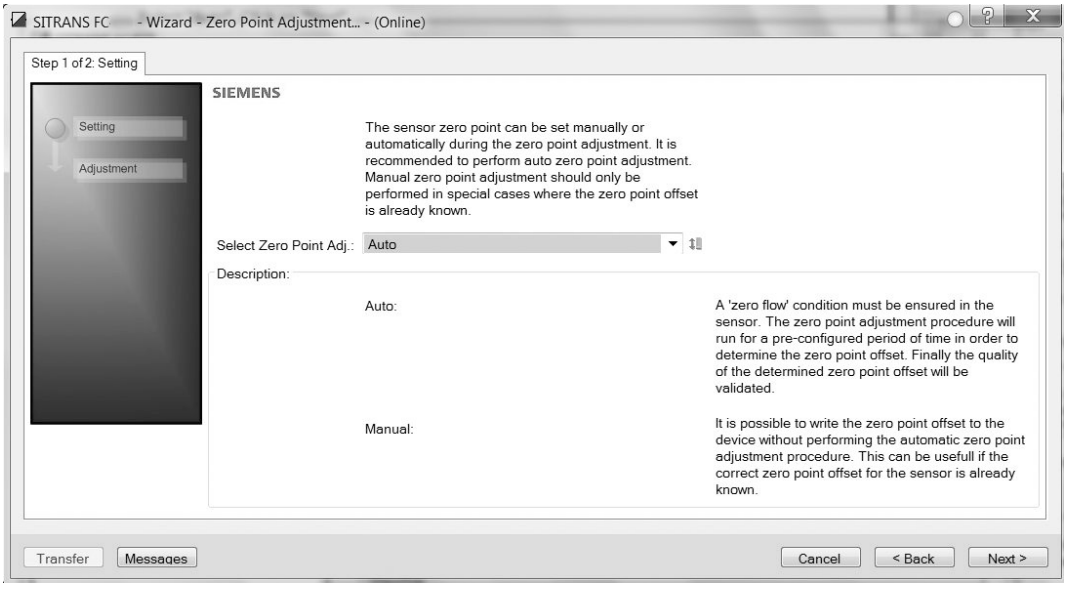

It is recommended to use the default settings. Change the **Zero Point Adjustments Settings**, if necessary.

Click on **Auto Zero Point Adjustment**.

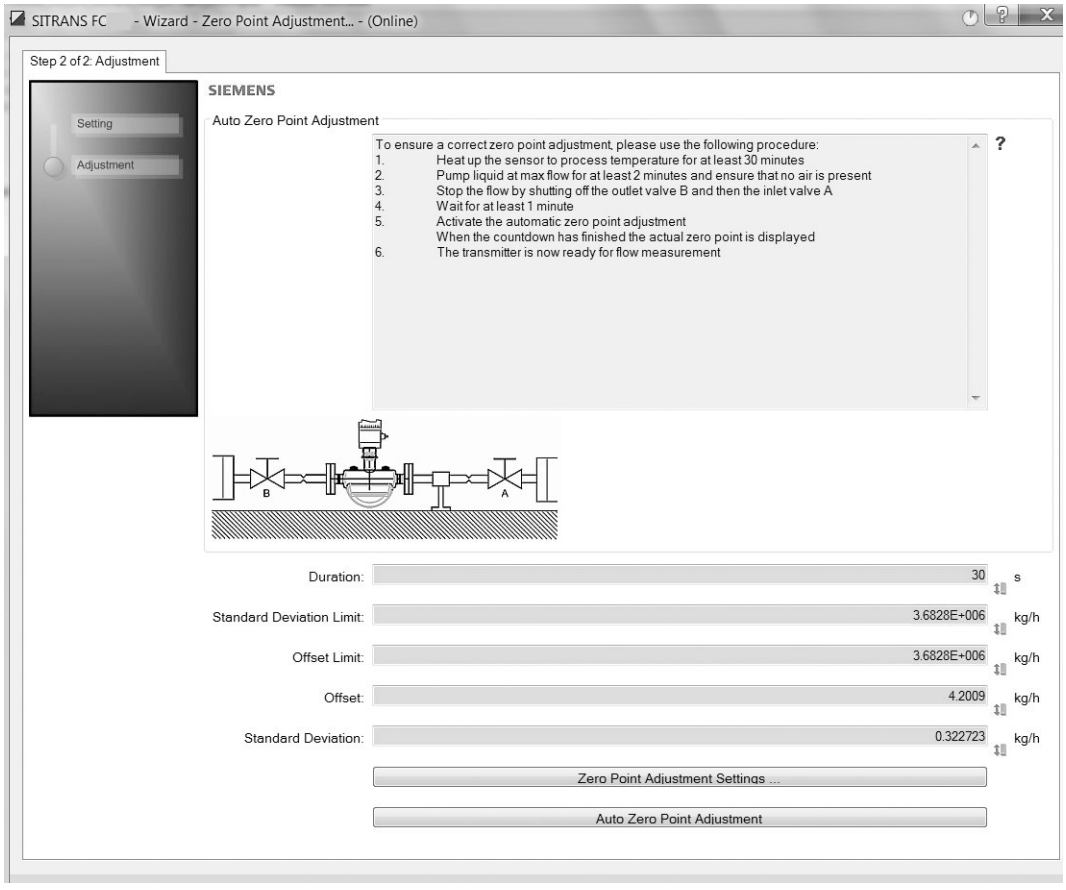

6.5.9 Changing parameter settings using SIMATIC PDM

Note

Clicking on **Cancel** during an upload from device to SIMATIC PDM will result in some parameters NOT being updated.

Many parameters are accessed via the online menus in PDM, see Parameters accessed via drop-down menus (Page 76) for the others.

1. Launch SIMATIC PDM, connect to the appropriate device and upload data.
2. Adjust parameter values in the parameter value field then click on **Enter**. The status fields read **Changed**.
3. Open the **Device** menu, click on **Download to device**, then use **File → Save** to save settings offline. The status fields are cleared.

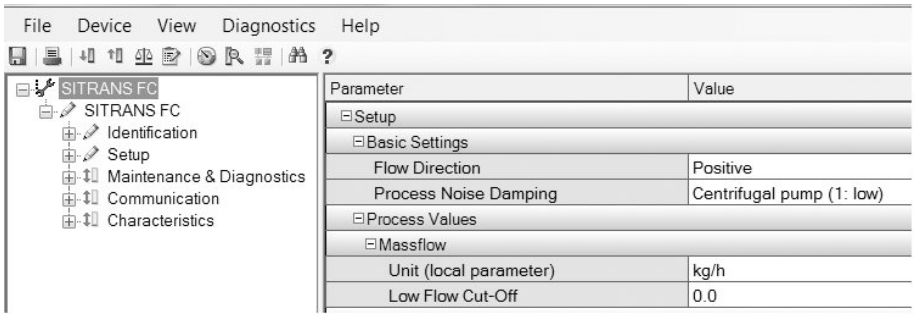

6.5.10 Parameters accessed via drop-down menus

Click on **Device** or **View** to open the associated drop-down menus.

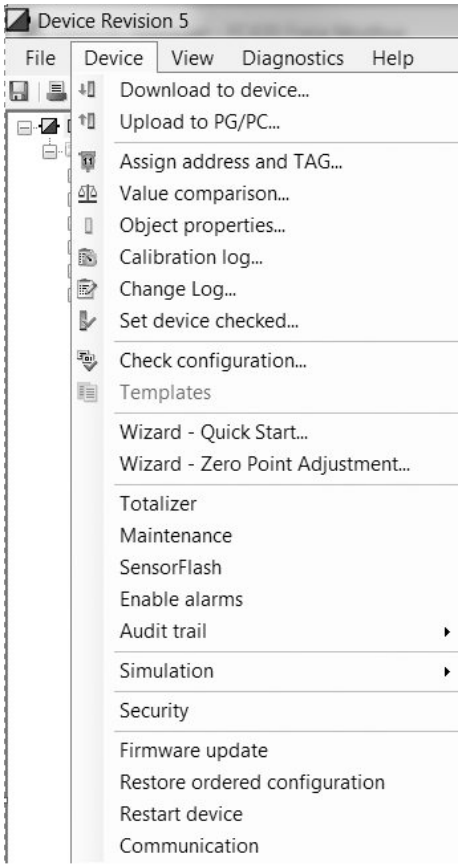

Drop-down menus

Table 6-1 Device menus

Device menus	Description
Download to Device	Downloads all writable parameters to the device
Upload to PC/PG	Uploads all parameters from the device to the parameter table
Assign address and TAG	Assign communication address and TAG name
Value comparison	Compare values between device / project
Object properties	Properties for device and project
Calibration log	Create calibration logs for field devices.
Change log	The change log records which actions have been performed with SIMATIC PDM on devices
Set the device checked	The device can be set to checked / or unchecked
Check configuration	Check configuration if it contains errors
Wizard - Quick Start	Guide for a quick commissioning
Wizard - Zero Point Adjustment	Guide for zero point adjustment (automatic and manual)

Table 6-2 View menus

View menus	Description
Process Variables (online dialog)	Shows all process values
Device Diagnostic (online dialog)	Shows all diagnostics information (alarms and diagnostics parameters)
Toolbar (online dialog)	Shows/hides the toolbar
Status Bar	Shows/hides the status bar
Update	Updates the content of the active window

6.5.11 Zero point adjustment

The flowmeter system is optimized through a zero point adjustment.

Performing a zero point adjustment

Note

Preconditions

Before a zero point adjustment is initiated, the pipe must be flushed, filled and at an absolute flowrate of zero preferably also at operating pressure and temperature.

1. Flush out the flowmeter until a homogenous flow is established and the tubes completely filled.

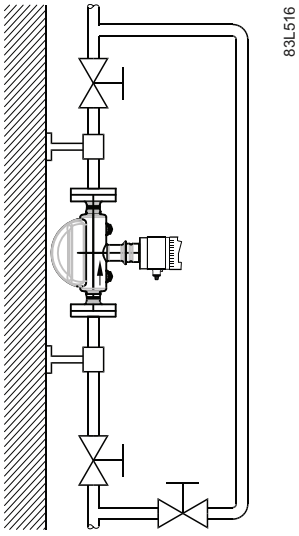

Figure 6-10 Best practice zero point adjustment with a by-pass line and two shut-off devices

2. Establish zero flow for example by closing the shut off-valves.
3. Wait 1 to 2 minutes, for the system to settle, and then perform zero adjustment as described in the following steps.
4. Select **Device → Wizard → Zero Point Adjustment...** from the main menu of SIMATIC PDM to perform an automatic zero point adjustment.

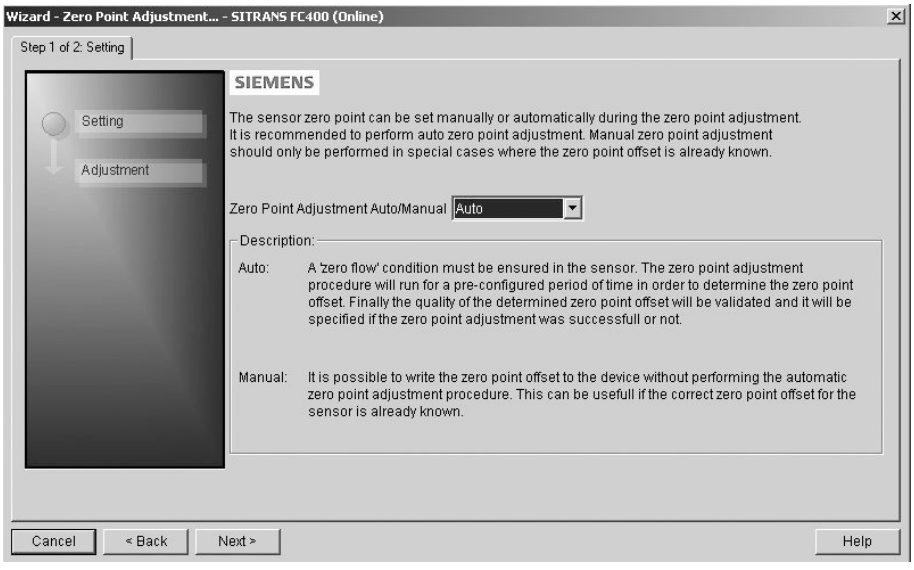

5. Click **Next** and then **Auto Zero Point Adjust**.

6. During the process a progress bar is visible.
7. At the end of the zero adjustment, the outcome is displayed as an offset and a standard deviation.

Note

If you get an error message after the zero point adjustment, refer to Alarms and system messages (Page 91).

The system is now ready for normal operation.

6.5.12 Process variables

1. To compare outputs in real time select **View** → **Process Variables** to see all process values, totalizers and loop current.
2. Verify that the process values show the expected values.



Figure 6-11 Process variables

Trend view

Open the menu **View** → **Process Variables** and click on one of the **Trend View** buttons to monitor the trend of one or all process values available at each tab.

Functions

7

In the following the main functionalities of the device are described in detail.

7.1 Process values

According to standard practice with serial communication the Modbus RTU signal reports primary process values and error status strictly with SI units[1)] – kilogram, meter, second and degree Celsius as standard process values.

[1)] 1 kg/s of water flow equals 0.001 m³/s of volume flow, and 3600 kg/h.

The process values are updated every 10 ms (100 Hz update rate) synchronous with the DSP update cycle.

Process value parameters

Default units for process values can be changes, default values are:

- Massflow (MassflowValue) [kg/s]
- Volumeflow (VolumeflowValue) [m^3/s]
- Density (Density) [kg/m^3]
- Process media temperature (FlowMediaTemp) [°C]
- Frame temperature [°C]

7.2 Zero point adjustment

In the following the automatic zero point adjustment function is described. For further details, see Zero point adjustment.

Note

Preconditions

Before a zero point adjustment is initiated, the pipe must be flushed, filled and at an absolute flowrate of zero preferably also at operating pressure and temperature. Refer to appendix Zero point adjustment for more details.

Note

Change of parameters during zero point adjustment

Do not change any other parameter during the zero point adjustment procedure.

Automatic zero point adjustment

The device measures and calculates the correct zero point automatically.

The automatic zero point adjustment of the flowmeter is set by the following parameters:

- Duration (Modbus address 2135)
- Start Zero Point Adjustment (Modbus address 2180)

When zero adjust is initiated by selecting **Start Zero Point Adjustment**, the massflow values are acquired and totalized for the configured period (Duration). The default zero point adjustment period (30 s.) is normally sufficient for a stable zero point measurement.

Note

Extremely low flow quantity

If the flow quantity is extremely small, extremely precise measurement is necessary. In this case, a long zero point adjustment period can be selected for improved zero point adjustment.

Zero point calculation

During zero point adjustment, an average value is automatically calculated using the following formula:

Zero Point Offset Value		
Average of N flow values	$\overline{x} \equiv \frac{\sum_{i=1}^{N} x_i}{N}$	x_i is an instantaneous flow value sampled in the time domain N = Number of samples during zero point adjustment

The offset value must be within the determined **Zero Point Offset Limit** (Modbus address 2140).

Note

Exceeded zero point offset limit

If the offset value is greater than the configured limit, proceed as follows:

- Check that the tube is completely filled and that the flowrate is absolute zero.
- Check the validity of the configured zero point offset limit.
- Repeat the zero point adjustment.

Zero point standard deviation

After completion of the procedure, the standard deviation is calculated in accordance with the following formula:

Zero Point Standard Deviation	
Standard deviation of N values	$s \equiv \sqrt{\frac{\sum_{i=1}^{N}(x_i - \bar{x})^2}{N-1}}$

The standard deviation contains important feedback on the homogeneity of the fluid, for example on the presence of bubbles or particles.

The standard deviation must be within the determined **Standard Deviation Limit** (Modbus address 2138).

Note

Exceeded standard deviation limit

If the standard deviation is greater than the configured limit, proceed as follows:

- Check that the tube is completely filled and that the flow rate is absolute zero.
- Check that the installation is vibration-free.
- Check the validity of the configured standard deviation limit in parameter 2.6.4 **Standard Deviation Limit**.
- Repeat the zero point adjustment.

Successful automatic zero point adjustment

If the new zero point offset value is valid, it is automatically stored as the new zero point for the sensor. It remains stored in the case of a power failure.

Manual zero point adjustment

In case an automatic zero point adjustment cannot be performed, it is possible to do a manual zero point adjustment by entering the zero point offset value.

1. Select Modbus address 2132 **Zero Point Adjustment** and set the value to 1 = **Manual Zero Point Adjustment**.
2. Select Modbus address 2133 **Manual Zero Point Offset** and enter the desired offset value.

7.3 Low flow cut-off

In certain applications, as for instance batching applications, no flow signals under a certain flow level are desired. In these applications, the flow signal can be forced to zero, when the flow is lower than a predefined flow value (Low Flow Cut-Off).

The transmitter provides two parameters for setting the low flow cut-off:

- Low Mass Flow Cut-Off (Modbus address 2125)
- Low Volume Flow Cut-Off (Modbus address 2170)

7.4 Empty tube monitoring

The empty tube monitoring function uses the process density for detecting an empty tube. Use of this function is recommended for all standard applications.

Note

Gas applications

Deactivate the empty tube monitoring function.

Empty tube monitoring parameters

Two parameters for setting the empty tube monitoring function are available:

- Empty Tube Detection (Modbus address 2129)
- Empty Tube Limit (Modbus address 2127)

The empty tube monitoring is activated via the Empty Tube Detection parameter. When the empty tube monitoring function is on, the massflow / volumeflow value is forced to zero if the tube is empty.

The tube is defined as empty, if the measured density value is lower than the value defined via the Empty Tube Limit parameter.

Note

Process media density

Risk of unintentionally forcing flow values to zero, if the difference between the empty tube limit density value and the density of the process media is not sufficient.

- Ensure sufficient difference between the empty tube limit density value and the process media density

7.5 Process noise damping

Noise damping function

The dynamic sensitivity of the flow measurement signal to rapid changes in process flows can be reduced by use of the process noise damping function. The function is typically used in environment with:

- Strongly pulsating flow
- Changing pump speeds
- Large pressure variations

Process noise damping settings

Reduce interfering process noise by increasing the setting of the parameter **Process Noise Damping** (Modbus address 2130).

- Centrifugal pump (1: low)
- Triplex pump (2)
- Duplex pump (3)
- Simplex pump (4)
- Cam pump (5: high)

The default value is **Duplex pump**. The damping affects all functions and outputs of the sensor.



Figure 7-1 Centrifugal pump (1: low)

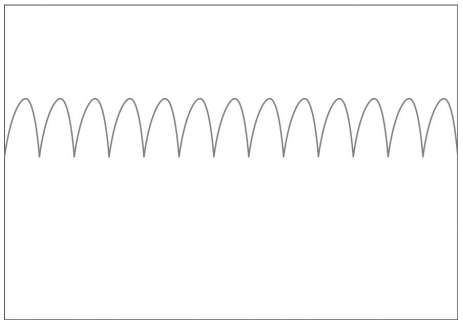

Figure 7-2 Triplex pump (2)

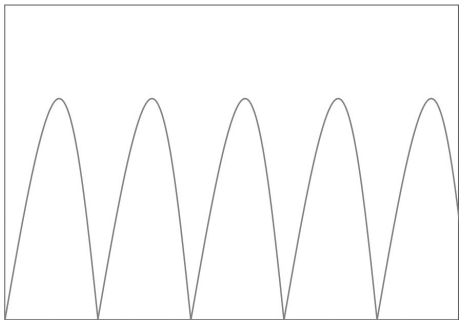

Figure 7-3 Duplex pump (3; default setting)

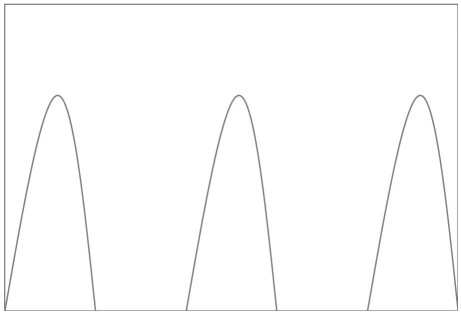

Figure 7-4 Simplex pump (4)

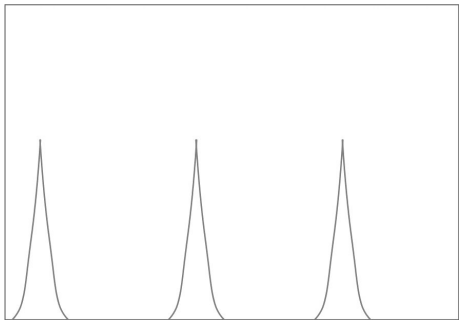

Figure 7-5 Cam pump (5: high)

Note

Increased reaction time

The reaction time of the sensor increases when the process noise is damped.

7.6 Totalizer

Totalizer function

The device has one totalizer function that can be used to totalize the massflow process value.

The totalizer may be paused, resumed or reset:

- Pause (Modbus address 2613): the totalizer holds the last value before the failure occurred
- Resume (Modbus address 2614): the totalizer continues counting the actual measured value
- Reset (Modbus address 2612): the totalizer continues counting based on the last input value (for example massflow) before the failure occurred.

Note

The totalizer is reset on power failure.

7.7 Access management

All parameters may be viewed, but some are protected against changes by access level control.

The Access Management menu makes it possible to gain access to PIN code protected parameters and to change PIN codes.

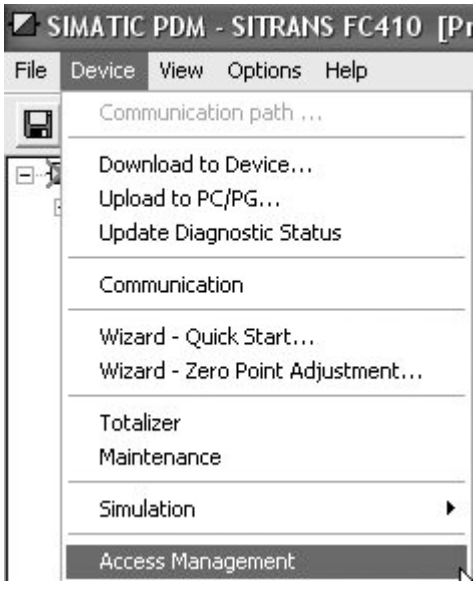

Figure 7-6 Access Management menu

The access levels are:

- Read Only
  Allows no configuration. The user is only able to view the parameter values. No PIN code is required.
- User
  Allows configuration and service of all parameters except calibration parameters. Default PIN code is 2457.

Note

Auto Log Off function

The access level will be set to Read Only mode if the device is powered off

7.8 Simulation

Simulation is used for testing purposes, typically for checking that the readings of the control system are correct.

Process value simulation

The following process values can be simulated:

- Massflow (Modbus address 2764)
- Density (Modbus address 2766)
- Process Media Temperature (Modbus address 2768)
- Frame Temperature (Modbus address 2770)
- Volumeflow (Modbus address 2772)

The simulation can be activated through SIMATIC PDM in the menu **Device → Simulation → Process Variables**.

7.9 Changing Modbus communication settings

Changing communication parameters, for example **Baud Rate**, **Modbus Parity Framing** or **Bus Address** effects the Modbus communication as follows:

- The new settings have effect only after a reset, either by restarting the device or writing the value 1 to Modbus address 600 **Restart communication**.
- The new settings will not have effect until the Modbus driver has responded to any ongoing Modbus request.

NOTICE
Setting addresses in a multidrop network It is recommended NOT to use the default address in a multi-drop network. When setting device addresses, make sure that each device has a unique address. Replication of addresses may cause abnormal behavior of the entire serial bus and make the master unable to communicate with all slaves on the bus.

7.10 Float transmission

The Float Byte Order function ensures that the master and slave use the same sequence of the bytes when transmitting float values. This enables the user to configure the FC410 using the configuration tool, SIMATIC PDM, and operate the device with all types of PLCs without reprogramming the PLC. The transmission order is configured by setting the parameter **Byte Order** in the submenu **Device** → **Communication**.

Note

The command **Restart Communication** must be executed to activate the new byte order setting.

This table shows the different options for setting the transmission method:

Selection	Sequence			
	1st	2nd	3rd	4th
1 - 0 - 3 - 2	Byte 1 (MMMMMMMM)	Byte 0 (MMMMMMMM)	Byte 3 (SEEEEEEE)	Byte 2 (EMMMMMMM)
0 - 1 - 2 - 3	Byte 0 (MMMMMMMM)	Byte 1 (MMMMMMMM)	Byte 2 (EMMMMMMM)	Byte 3 (SEEEEEEE)
2 - 3 - 0 - 1	Byte 2 (EMMMMMMM)	Byte 3 (SEEEEEEE)	Byte 0 (MMMMMMMM)	Byte 1 (MMMMMMMM)
3 - 2 - 1 - 0 *	Byte 3 (SEEEEEEE)	Byte 2 (EMMMMMMM)	Byte 1 (MMMMMMMM)	Byte 0 (MMMMMMMM)

* = Factory setting

S = Sign

E = Exponent

M = Mantissa

NOTICE

Change of float byte order

If the float byte order is changed by use of PDM to anything other than default, all float values shown in PDM are wrong.

Alarms and system messages

8

8.1 Alarm messages

In the following tables the bits for alarm group 1 and alarm group 2 can be found along with possible causes and directions for corrective action.

Alarm group 1 (Modbus address 3012)

Bit	Diagnostic	Action
4 5	Sensor supply volt. out of range	Contact Siemens customer support
6 7 8 9	Temperature measurement fault	Contact Siemens customer support
10 11 12 13	Flow values not valid	Can be due to problems with measured fluid or hardware malfunction. If the failure continues then contact Siemens customer support
14	Invalid calibration data	Contact Siemens customer support for recalibration
15	Invalid compensation data	Contact Siemens customer support
17 18	Malfunction in Pickup Amplitude	Contact Siemens customer support
23 24 25	Malfunction in sensor driver	Contact Siemens customer support
26	Unstable driver oscillation	Contact Siemens customer support
27	Massflow out of specification	Reduce the flow. If the failure continues then contact Siemens customer support
28	Volumeflow out of specification	Reduce the flow. If the failure continues then contact Siemens customer support
29	Density out of specification	Contact Siemens customer support
30	Fluid temp. below limit	Increase the fluid temperature. If the failure continues then contact Siemens customer support
31	Fluid temp. above limit	Reduce the fluid temperature. If the failure continues then contact Siemens customer support

Alarm group 2 (Modbus adddress 3014)

Bit	Diagnostic	Action
0	Frame temp. below limit	Increase fluid temperature and check that ambient temperature is within specified limits. If the failure continues then contact Siemens customer support
1	Frame temp. above limit	Reduce fluid temperature and check that ambient temperature is within specified limits. If the failure continues then contact Siemens customer support

Bit	Diagnostic	Action
2	**Standard Deviation** above limit (shown for only 2 seconds)	Measurement continues with values from last successful zero point adjustment. Improve conditions for automatic zero point adjustment and repeat adjustment.
3	**Zero Point Offset** above limit (shown for only 2 seconds)	Measurement continues with values from last successful zero point adjustment. Improve conditions for automatic zero point adjustment and repeat adjustment.
4	Zero point adjustment failed (shown for only 2 seconds)	Measurement continues with values from last successful zero point adjustment. Improve conditions for automatic zero point adjustment and repeat adjustment.
5	**Empty Tube Limit** exceeded	Make sure that the sensor is filled with liquid and that the liquid density is within the specified **Empty Tube Limit**
6	The sensor is partially filled	Make sure that the sensor is filled with liquid
7	Parameter storage malfunction	Turn off the power, wait 5 seconds and turn on the power again. If the failure continues then contact Siemens customer support
8 9 10 11 12 13	Internal error in sensor	Contact Siemens customer support
14	Unstable measurement condition	Check if air is present in the liquid and that the flowmeter is operated within its specifications
15	Auto filtering	Check that the flowmeter is operated within its specifications. Check other alarms to rule out HW malfunction
23	The sensor is stabilizing	Turn off the power, wait 5 seconds and turn on the power again. If the failure continues then contact Siemens customer support.

Service and maintenance

9

9.1 Basic safety notes

Note

The device is maintenance-free.

The device is maintenance-free. However, a periodic inspection according to pertinent directives and regulations must be carried out.

An inspection can include check of:

- Ambient conditions
- Seal integrity of the process connections, cable entries, and cover screws
- Reliability of power supply, lightning protection, and grounds

⚠ WARNING

Impermissible repair and maintenance of the device

- Repair and maintenance must be carried out by Siemens authorized personnel only.

⚠ WARNING

Impermissible repair of explosion protected devices

Risk of explosion in hazardous areas

- Repair must be carried out by Siemens authorized personnel only.

⚠ WARNING

Dust layers above 5 mm

Risk of explosion in hazardous areas.

Device may overheat due to dust build up.

- Remove dust layers in excess of 5 mm.

NOTICE

Penetration of moisture into the device

Device damage.

- Make sure when carrying out cleaning and maintenance work that no moisture penetrates the inside of the device.

⚠ WARNING

Leaks in the sample gas path

Risk of poisoning.

When measuring toxic process media, these can be released or collect in the device if there are leaks in the sample gas path.

- Purge the device as described in Commissioning (Page 59).
- Dispose of the toxic process media displaced by purging in an environmentally friendly manner.

⚠ CAUTION

Releasing button lock

Improper modification of parameters could influence process safety.

- Make sure that only authorized personnel may cancel the button locking of devices for safety-related applications.

⚠ WARNING

Use of a computer in a hazardous area

If the interface to the computer is used in the hazardous area, there is a risk of explosion.

- Ensure that the atmosphere is explosion-free (hot work permit).

9.2 Recalibration

Siemens A/S, Flow Instruments offers to recalibrate the sensor at our works in Denmark. The following calibration types are offered as standard according to configuration:

- Standard calibration
- Density calibration

Note

SensorFlash

For sensor recalibration the SensorFlash memory unit must always be returned with the sensor.

9.3 Cleaning

Cleaning the enclosure

- Clean the outside of the enclosure with the inscriptions and the display window using a cloth moistened with water or a mild detergent.
- Do not use any aggressive cleansing agents or solvents, e.g. acetone. Plastic parts or the painted surface could be damaged. The inscriptions could become unreadable.

9.3.1 Electrostatic charge

⚠ WARNING

Electrostatic charge

Risk of explosion in hazardous areas if electrostatic charges develop, for example, when cleaning plastic surfaces with a dry cloth.

- Prevent electrostatic charging in hazardous areas.

9.4 Maintenance and repair work

⚠ WARNING

Impermissible repair of explosion protected devices

Risk of explosion in hazardous areas

- Repair must be carried out by Siemens authorized personnel only.

9.4.1 Maintenance during continued operation in a hazardous area

⚠ WARNING

Maintenance during continued operation in a hazardous area

There is a risk of explosion when carrying out repairs and maintenance on the device in a hazardous area.

- Isolate the device from power.

- or -

- Ensure that the atmosphere is explosion-free (hot work permit).

⚠ WARNING

Impermissible accessories and spare parts

Risk of explosion in areas subject to explosion hazard.

- Only use original accessories or original spare parts.
- Observe all relevant installation and safety instructions described in the instructions for the device or enclosed with the accessory or spare part.

9.4.2 Humid environment

⚠ WARNING

Humid environment

Risk of electric shock.

- Avoid working on the device when it is energized.
- If working on an energized device is necessary, ensure that the environment is dry.
- Make sure when carrying out cleaning and maintenance work that no moisture penetrates the inside of the device.

9.4.3 Hot, toxic and corrosive process media

⚠ WARNING

Hot, toxic or corrosive process media

Risk of injury during maintenance work.

When working on the process connection, hot, toxic or corrosive process media could be released.

- As long as the device is under pressure, do not loosen process connections and do not remove any parts that are pressurized.
- Before opening or removing the device ensure that process media cannot be released.

9.4.4 Improper connection after maintenance

⚠ WARNING

Improper connection after maintenance

Risk of explosion in areas subject to explosion hazard.

- Connect the device correctly after maintenance.
- Close the device after maintenance work.

Refer to Power (Page 111).

9.4.5 Maintenance

The device is maintenance-free. However, a periodic inspection according to pertinent directives and regulations must be carried out.

An inspection can include check of:

- Ambient conditions
- Seal integrity of the process connections, cable entries, and cover screws
- Reliability of power supply, lightning protection, and grounds

NOTICE

Repair and service must be carried out by Siemens authorized personnel only.

Note

Siemens defines flow sensors as non-repairable products.

Maintenance information parameters

The basic maintenance information parameters are:

- Current Date and Time
- Operating Time Total
- Operating Time
- Configuration Counter
- Transmitter Hardware Revision
- HMI Hardware Revision
- Sensor Hardware Revision

9.4.6 Service information

Service information is information about the condition of the device used for diagnostics and service purposes.

Service information parameters

The basic service information parameters are:

- Driver Current
- Pickup 1 Amplitude
- Pickup 2 Amplitude
- Sensor Frequency
- Process Media Temperature
- Zero Point Adjustment Auto/Manual
- Zero Point Offset Value
- Manual Zero Point
- Zero Point Standard Deviation

9.5 Replacing the device

If the equipment has been used for measuring corrosive substances there is a risk of chemical burns when disassembling.

⚠ CAUTION

Corrosive substances

Risk of chemical burns when replacing the sensor.

The sensor in the device contains corrosive substances that result in burns on unprotected skin.

- Make sure that the sensor enclosure is not damaged when replacing the sensor.
- If contact with the corrosive substances occurs, rinse the affected skin immediately with large amount of water to dilute substance.

9.6 Transport

To guarantee sufficient protection during transport and storage, observe the following:

- Keep the original packaging for subsequent transportation.
- Devices/replacement parts should be returned in their original packaging.
- If the original packaging is no longer available, ensure that all shipments are properly packaged to provide sufficient protection during transport. Siemens cannot assume liability for any costs associated with transportation damages.

NOTICE

Insufficient protection during storage

The packaging only provides limited protection against moisture and infiltration.

- Provide additional packaging as necessary.

Special conditions for storage and transportation of the device are listed in Technical data (Page 111).

9.7 Return procedure

Enclose the bill of lading, return document and decontamination certificate in a clear plastic pouch and attach it firmly to the outside of the packaging.

Required forms

- Delivery note
- Return goods delivery note (http://www.siemens.com/processinstrumentation/returngoodsnote)
  with the following information:
  - Product (item description)
  - Number of returned devices/replacement parts
  - Reason for returning the item(s)
- Decontamination declaration (http://www.siemens.com/sc/declarationofdecontamination)
  With this declaration you warrant "that the device/replacement part has been carefully cleaned and is free of residues. The device/replacement part does not pose a hazard for humans and the environment."
  If the returned device/replacement part has come into contact with poisonous, corrosive, flammable or water-contaminating substances, you must thoroughly clean and decontaminate the device/replacement part before returning it in order to ensure that all hollow areas are free from hazardous substances. Check the item after it has been cleaned. Any devices/replacement parts returned without a decontamination declaration will be cleaned at your expense before further processing.

9.8 Disposal

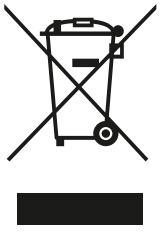

Devices described in this manual should be recycled. They may not be disposed of in the municipal waste disposal services according to the Directive 2012/19/EC on waste electronic and electrical equipment (WEEE).

Devices can be returned to the supplier within the EC, or to a locally approved disposal service for eco-friendly recycling. Observe the specific regulations valid in your country.

Further information about devices containing batteries can be found at: Information about battery / product return (WEEE) (https://support.industry.siemens.com/cs/document/109479891/)

Note

Special disposal required

The device includes components that require special disposal.

- Dispose of the device properly and environmentally through a local waste disposal contractor.

9.9 Spare parts and accessories

9.9.1 Ordering of spare parts

Ensure that your ordering data is not outdated. The latest ordering data is always available on the Internet: Catalog process instrumentation (http://www.siemens.com/processinstrumentation/catalogs)

9.9.2 Ex approved products

Note

Repair of Ex-approved products

It is the customer's responsibility that repair of Ex-approved products fulfill national requirements.

9.9.3 Replaceable components

This table gives an overview of which components can be replaced.

Table 9-1 Overview of replaceable components

Component	Order number	Photo and position on illustration in Design (Page 23)		Hot swapable *
SITRANS FCT010 Blind lid small (∅85 mm) Material: Painted aluminum	A5E03549295			**Yes** Observe hazardous area access protocol
SITRANS FCT010 Cable entry metric	A5E03549313			**No**
SITRANS FCT010 Cable entry NPT	A5E03906080			**No**
SITRANS FCT010 Bag of loose parts for sensor	A5E03549324	Contents: Screws, O-rings, cable clamp parts		

Component	Order number	Photo and position on illustration in Design (Page 23)		Hot swapable *
SITRANS FCT010 M12 option for FCT010 housing	A5E03906095	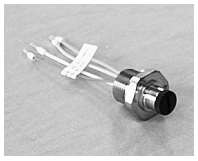		No
Frontend cassette Spare part frontend cassette for FCT010 From firmware 2.X	A5E03549191			No
Frontend cassette Spare part frontend cassette for FCT010 From firmware 4.0	A5E41526286			

* Components may be replaced while power is on in non-hazardous areas only.

Diagnosing and troubleshooting 10

10.1 Display of device status according SIMATIC and NAMUR NE107

The table explains the meaning of possible device status and actions for the user or service. Depending on the type and availability of local display of the device, status is shown as SIMATIC and/or NAMUR NE107 symbol. Additionally the symbol for the according device status is visualized in remote engineering, asset management or process control systems. Refer to the manual of your automation system how diagnostics states are displayed.

Symbols

Table 10-1 Mapping of device states in SIMATIC products (e.g. SIMATIC PDM) and NE107

SIMATIC PDM / PLC			NAMUR NE 107			Description	Measure
Icon	Device status	Priority	Icon	Device status	Priority		
	Maintenance alarm	1		Failure	1	Output signal invalid due to malfunction in the field device or its peripherals.	Maintenance is required immediately.
	Maintenance demanded	2		Maintenance required	3	Output signal is still valid but wear reserve is nearly exhausted, or a function will soon be restricted.	Maintenance is strongly recommended as soon as possible.
	Maintenance required	3		Maintenance required	3	Output signal is still valid. No functional restriction has been detected but wear reserve is expected in the next weeks.	Maintenance of device should be planned.
	Manual mode	4		Function check	2	Output signal temporarily invalid (e.g. frozen) due to ongoing work on the device.	Disable manual mode via HMI or engineering system.
	Simulation mode	5		Function check	2	Output signal temporarily does not represent the process because output based on a simulation value.	Disable simulation mode via HMI or engineering system or restart device.
	Out of service	6		Function check	2	Output signal does not represent process value. Device mode is set to "Out of service".	Disable “Out of service” and activate normal operation mode.
	Configuration error	7		Failure	1	Output signal invalid due to a parameter setting, an interconnection error or a configuration error in HW.	Check device hardware configuration or parameter settings via HMI or engineering system.

SIMATIC PDM / PLC			NAMUR NE 107			Description	Measure
Icon	Device status	Priority	Icon	Device status	Priority		
	Process value alarm	8		Out of specification	4	Deviations from permissible ambient or process conditions determined by device (through self-monitoring, or faults in device) indicate that measurement is uncertain, or deviations from set value in actuators is probably greater than expected under normal operating conditions. Process or ambient conditions will damage device or result in uncertain output.	Check ambient temperature or process conditions. If possible, relocate device.
	Process value warning	9		Out of specification	4	Deviations from permissible ambient or process conditions determined by device (through self-monitoring, or warnings in device) indicate that measurement is uncertain, or deviations from set value in actuators is probably greater than expected under normal operating conditions. Process or ambient conditions could damage device or result in uncertain output.	Check ambient temperature or process conditions. If possible, relocate device.

10.2 Fault codes and corrective actions

10.2.1 Diagnostic messages

In the following table the diagnostic message IDs are listed along with possible causes and directions for corrective action.

ID	Icon	Message	Cause/ measures
AA		Device lifetime: maintenance demanded	Forthcoming end of configured device's lifetime. Maintenance demanded.
AB		Device lifetime: maintenance required	Forthcoming end of configured device's lifetime. Maintenance required.
AC		Sensor lifetime: maintenance demanded	Forthcoming end of configured sensor's lifetime. Maintenance demanded.
AD		Sensor lifetime: maintenance required	Forthcoming end of configured sensor's lifetime. Maintenance required.

ID	Icon	Message	Cause/ measures
AE		Service: maintenance required	Forthcoming end of the configured service interval. Maintenance required.
AF			

10.3 Operation troubleshooting

10.3.1 Troubleshooting sensor-related problems

Incorrect and unstable measurements, especially at low flows, are typically a result of an unstable zero point due to:

- Incorrect installation
- Bubbles in the liquid
- Vibrations/Cross talk
- Solid particles settling in the liquid

In the following a 4-step guide to troubleshooting is provided:

Step 1	Preliminary application inspection
Step 2	Zero point adjustment
Step 3	Measurement error calculation
Step 4	Application improvement

The guide will enable you to trace the reason for incorrect measurements and to improve the application.

Step 1: Inspecting the application

Ensure that:

1. The sensor is installed as described in Installing/mounting.
2. The sensor is located in a vibration-free position. Vibrations can disturb the sensor and therefore cause measurement error.

Depending on application, you should furthermore ensure the following:

- Liquid application
  Ensure that the sensor is filled with liquid and liquid only.
  Air or gas bubbles in the liquid cause instability and can result in measurement errors.
  Flush the pipe systems and the sensor for several minutes at maximum flowrate to remove any air bubbles which may be present.

  Note

  The liquid must be homogeneous in order to measure with high accuracy. If the liquid contains solid particles of greater density than the liquid, then these solids can settle, especially at low flow rates, which will cause instability in the sensor and lead to measurement errors.

  For pastes or process fluids with suspended solids always orient the sensor vertically with flow in upward direction to maintain solids suspension.

- Gas application
  Ensure that the gas pressure/temperature conditions contain sufficient superheat to prevent dewing or precipitation. If the gas contains vapor or droplets then these may precipitate, causing instability.

Step 2: Performing a zero point adjustment

The second step in the troubleshooting procedure is to zero point adjust the device. For further information on zero point adjustment, see Commissioning.

10.3.1.1 Step 3: Calculating the measurement error

Step 3: Calculating the measurement error

The result of the zero point adjustment will show you if the zero point was set under good and stable conditions.

The lower the obtained value of the parameter **Zero Point Standard Deviation**, the lower is the achievable measuring error. For a well-installed flowmeter, the Zero Point Standard Deviation corresponds to the specified zero point stability for the sensor size, see Performance (Page 111).

The parameter **Zero Point Standard Deviation** is located in the **Maintenance & Diagnostics** menu in the SIMATIC PDM.

Calculating the measurement error

- The error curve is plotted from the formula:

$$E = \pm\sqrt{(Cal)^2 + \left(\frac{z \times 100}{qm}\right)^2}$$

E = Error [%]
Z = Zero point [kg/h]

qm = Mass flow [kg/h]
Cal. = Calibrated flow accuracy: 0.10

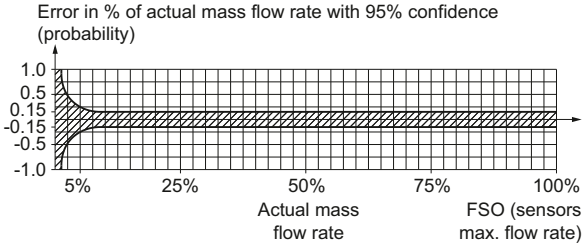

Table 10-2 **Reference conditions for flow calibrations (ISO 9104 and DIN/EN 29104)**

Flow conditions	Fully developed flow profile
Temperature, medium	20 °C ± 2 °C (68 °F ± 3.6 °F)
Temperature, ambient	20 °C ± 2 °C (68 °F ± 3.6 °F)
Liquid pressure	2 ± 1 bar
Density	0.997 g/cm3
Supply voltage	Un ± 1 %
Warming-up time	30 min.
Cable length	5 m between transmitter and sensor

Step 4: Improving the application

In the following it is described how to find the causes of a high Zero Point Standard Deviation and how to improve the installation.

Setting Low Flow Cut-Off

In order to see if the zero point becomes more stable when making changes / adjustments, the Low Mass Flow Cut-Off (MassFlowCutOff) must be set to 0.0 kg/s.

When Low Flow Cut-Off has been set, it is possible to see the instability directly from the massflow in the online window ("View → Process variables")

This information can be used to troubleshoot. For example, tightening the brackets which hold the sensor, or turning off the pump to check if vibrations from the pump are disturbing the sensor, etc.

Incorrect installation of the sensor

- Has the sensor been correctly installed, that is fastened to the floor / wall or frame with good mounting brackets as shown in the instructions?

Especially for low flowrates, that is flowrates less than 10% of the maximum capacity of the flow meter, it is important that the sensor is correctly and stably installed.

If the sensor is not correctly fixed in place, the zero point of the sensor will change, leading to measuring errors.

Try to tighten up the sensor brackets to see whether the flow instability is reduced.

Vibrations and cross talk

Vibrations in the pipe system are normally generated by pumps.

Typically, cross talk is generated by two sensors of identical size and positioned in close proximity in the same pipe, or installed on the same rail or frame.

Vibrations / cross talk have a greater or lesser effect upon the zero point stability and therefore also the measurement accuracy.

1. Check whether there are vibrations.
   Turn off the pump and check whether the zero point stability improves, that is if the flowrate fluctuation in kg/h is reduced.
   If the sensor is disturbed by vibration from the pump or by pressure pulsations, the installation should be improved or the pump should be exchanged, for example to another type.
2. Check for cross talk.
   Turn off the power to the other flow meter(s) and wait approximately 2 minutes, so the vibrating tubes in the sensor have stopped vibrating. Then check if the zero point stability has improved, that is that the fluctuation in kg/h has been reduced. If this is the case, the sensors disturb one another and the installation should be improved.

Air in the liquid

When air is present in the liquid, the zero point becomes unstable, which leads to a poor measurement accuracy.

Checking for air:

- Check the Driver Current (View → Device Diagnostics → Advanced Diagnostic)
- Check if the Driver Current varies more than ±1 mA. If this is the case, it is usually due to the presence of air or gas bubbles in the liquid.
- Increase the pressure in the sensor, creating a large back pressure upon the sensor by reducing the opening of the outlet valve or by increasing the pump pressure. Thereby the size of air bubbles inside the sensor will be minimized. If the Driver Current value increases and/or the stability of the Driver Current decreases, it is proof that the liquid contains air or gas bubbles.

Typical causes of air in the liquid

- The entry pipe and sensor have not been properly filled with liquid.
- The pump cavitates, the rotary speed of the pump is too high in relation to the supply of liquid to the pump.
- The flow rate in the pipe is too high, so components sitting in front of the flowmeter can cause cavitation.
- If there is a filter installed before the flowmeter, it may be close to blocking, which also can cause cavitation.
- Liquid flashes to vapor bubbles while passing through partially open valves or orifices.

- The piping on the pump suction side, pump gaskets or the pump itself is not tight. Air gets sucked into the system due to a low pressure on the pump suction side.
- The piping on the pump suction side, pump gaskets or the pump itself is not tight. Air gets sucked into the system due to a low pressure on the pump suction side.

Solid particles in the liquid

If the solid particles in a liquid have a density higher than that of the liquid, they can precipitate inside the sensor and cause instability which leads to a measurement error.

If solid particles are present in the liquid, they must be homogeneously distributed and have similar density as the liquid. Otherwise they can cause relatively large measurement errors.

It is important that the sensor is installed such that solid particles can easily run out of the sensor.

1. Ensure that the sensor is installed vertically with an upwards flow.
2. Check if solid particles are present in the liquid:
   Take a sample of the liquid, fill a glass and see if the solids precipitate.

10.3.2 How do I update the firmware?

1. Download the new firmware bundle from (WWW.Siemens.com/FCT010)
2. Install the SITRANS FC410 /FCT010 service tool. This tool has to be used when the firmware has to downloaded to the transmitter.
3. Follow the instructions in the service tool.

Note

Firmware update

FW update is to be done only by authorized and trained service prsonnel.

10.4 Diagnosing with PDM

Diagnosing with PDM

SIMATIC PDM is a suitable tool for diagnosing the device.

You can use SIMATIC PDM to read all available parameters to a table for analyzing offline, view online/actual process values and online/actual diagnostic information.

Requirements

The following procedure must be completed before diagnosing:

- Installation of PDM and PDM device driver
- Connection of communications or digital communications interface

Refer to "Commissioning with PDM".

Technical data

11

Note

Device specifications

Siemens makes every attempt to ensure the accuracy of these specifications but reserves the right to change them at any time.

11.1 Power

Table 11-1 Power supply

Description	Specification
Supply Voltage [V]	12 - 27 VDC Um: 60 VDC
Reverse polarity protection	Yes
Power consumption	1.1 W

Intrisically Safe specification: Ui: 20 V, Ii: 484 mA, Pi: 2.3 W, Li: 0.6 uH, Ci: 1.9 nF.

11.2 Performance

Table 11-2 Reference conditions

Description	Specification
Process media	Water
Process media temperature	20 °C (68 °F)
Ambient temperature	25 °C (77 °F)
Process media pressure	2 bar (29 psi)
Process media density	0.997 g/cm^3 (62.2 lb/ft^3)
Reference device orientation	Horizontal installation, tubes down, flow in direction of arrow on casing, see Installing/Mounting.

Table 11-3 Mass flow accuracy

Sensor size	DI 1.0	DI 1.5	DI 2.1	DI 3	DN4 HP (DI 2.0)	DN4 C22 (DI 3.0)	DN4 316 (DI 3.5)	DI 6	DI 15
Qmin - minimum flowrate [kg/h] (lb/min)	On request	0.1 (0.22)	On request	1 (2.2)	On request	1 (2.2)	1 (2.2)	5 (11.0)	20 (44.1)
Qnom - nominal flow-rate [kg/h] (lb/min)	9,8 (21.6)	19.5 (43)	42 (92.6)	90 (198.4)	35 (77.2)	95 (209.4)	140 (308.6)	500 (1102)	3800 (8378)
Qmax - maximum flowrate [kg/h] (lb/min)	15 (33)	30 (66)	50 (110)	250 (550)	40 (88)	255 (562)	350 (770)	1000 (2200)	5600 (12350)
Max. zero point stability [kg/h]	On request	0.001 (0.002)	0.001 (0.002)	0.01 (0.02)	On request	0.01 (0.02)	0.01 (0.02)	0.05 (0.11)	0.2 (0,4)
Measuring accuracy [%]	0.3%	0.1%	0.1%	0.1%	0.3%	0.1%	0.1%	0.1%	0.1%
Repeatability error [%]	0.05%	0.05%	0.05%	0.05%	0.05%	0.05%	0.05%	0.05%	0.05%

Table 11-4 Density accuracy

Sensor size	DI 1.0	DI 1.5	DI 2.1	DI 3	DN4 HP (DI 2.0)	DN4 C22 (DI 3.0)	DN4 316 (DI 3.5)	DI 6	DI 15
Density accuracy, standard calibration [g/cm³]	n/a	0.005	0.005	0.005	n/a	0.0025	0.007	0.005	0.005
Density accuracy, extended calibration [g/cm³]	n/a	0.001	0.001	0.0015	n/a	0.0025	0.007	0.0015	0.0005
Density repeatability [g/cm³]	n/a	0.0002	0.0002	0.0002	n/a	0.0002	0.0002	0.0002	0.0001

Table 11-5 Media temperature accuracy

Sensor size	DI 1.0	DI 1.5	DI 2.1	DI 3	DN4 HP (DI 2.0)	DN4 C22 (DI 3.0)	DN4 316 (DI 3.5)	DI 6	DI 15
Media temperature accuracy [°C]	±0.5	±0.5	±0.5	±0.5	±0.5	±0.5	±0.5	±0.5	±0.5
Media temperature repeatability [°C]	±0.25	±0.25	±0.25	±0.25	±0.25	±0.25	±0.25	±0.25	±0.25
Brix error [°Brix]	n/a	0.2	0.2	0.3	n/a	0.3	0.3	0.3	0.1

Table 11-6 Additional error by deviations from reference conditions

Sensor size	DI 1.0	DI 1.5	DI 2.1	DI 3	DN4 HP (DI 2.0)	DN4 C22 (DI 3.0)	DN4 316 (DI 3.5)	DI 6	DI 15
Effect of ambient temperature [% / K actual flow-rate]	< ±0.003	< ±0.003	< ±0.003	< ±0.003	< ±0.003	< ±0.003	< ±0.003	< ±0.003	< ±0.003
Current:	< ±0.005	< ±0.005	< ±0.005	< ±0.005	< ±0.005	< ±0.005	< ±0.005	< ±0.005	< ±0.005
Effect of power supply fluctuations [% of measuring value on 1% alteration from Un]	None	None	None	<0.005%	None	None	None	<0.005%	<0.005%

Table 11-7 Process media conditions

Sensor size	DI 1.0	DI 1.5	DI 2.1	DI 3	DN4 HP (DI 2.0)	DN4 C22 (DI 3.0)	DN4 316 (DI 3.5)	DI 6	DI 15
Process media temperature (T_s) (min to max) • Standard [°C (°F)]	-50 °C to + 125 °C (-58 °F to + 257 °F)			-50 °C to + 180 °C (-58 °F to + 356 °F)	-40 °C to + 115 °C (-40 °F to + 239 °F)	-40 °C to + 115 °C (-40 °F to + 239 °F)		-50 °C to + 180 °C (-58 °F to + 356 °F)	
• High-temperature version [°C (°F)]	n/a	-50 °C to + 180 °C (-58 °F to + 356 °F)	n/a			-40 °C to + 180 °C (-40 °F to + 356 °F)			
Process media density (min to max) [g/cm³ (lb/inch³]	n/a	0 ... 2.9 g/cm3 (0 ... 0.105 lb/inch3)			n/a	0 ... 2.9 g/cm3 (0 ... 0.105 lb/inch3)			
Process media gauge max pressure 316L sensors [bar (psi)]	800 bar at 20 °C 640 bar at 180 °C (Derating is linear)	230 bar at 20°C (3336 PSI at 68 °F)	100 bar at 20 °C (68 °F)	230 bar at 20°C (3336 PSI at 68 °F)	n/a	n/a	130 bar (1885 psi) at 20-180 °C (68 °F-356 °F)	265 bar at 20°C (3844 PSI at 68 °F)	130 bar at 20°C (1885 PSI at 68 °F)
Process media gauge max pressure Hastelloy C22 sensors [bar (psi)]	n/a	365 bar at 20 °C (5294 PSI at 68 °F)	n/a	350 bar at 20°C (5076 PSI at 68 °F)	1000 bar at max 20°C (14503 psi)	410 bar (5945 psi) at 20-180 °C (68 °F-356 °F)	n/a	410 bar at 20°C (5946 PSI at 68 °F	200 bar at 20°C (2900 PSI at 68 °F)

Pressure drop	See "Pressure drop curves"
Pressure temperature ratings	See "Pressure - temperature ratings"

11.3 Interface

11.3.1 Modbus Communication Specification

Table 11-8 Modbus communication specification

Description	Specification
Device type	Slave
Baud rates	• 9600 • 19 200 (Factory setting) • 38 400 • 57 600 • 76 800 • 115 200
Number of stations	Max. 31 per segment without repeaters
Device address range	1 to 247
Protocol	Modbus RTU
Electrical interface	RS 485, 2-wire
Connector type	M12 / Cable termination
Supported function codes	• 3: read holding registers • 16: write multiple registers • 8: diagnostics
Broadcast	No [1)]
Maximum cable length [m]	600 meters (@ 115 200 bits/sec)
Standard	Modbus over serial line v 1.0 [2)]
Certification	one
Device Profile	None

[1)]: Standard restriction. The standard requires a LED indicator for visual diagnosis. This device does not support a LED indicator. Instead comprehensive display information is available. This device does not react to any Broadcast commands.

[2)]: According to the Specification & Implementation guide v. 1.0 available at the Modbus Organization website

Note

Storage location

All Modbus settings of the device are stored in a non-volatile memory.

11.4 Construction

Table 11-9 Designated use

Description	Specification
Measurement of process media	• Fluid Group 1 (suitable for dangerous fluids) • Aggregate state: Paste/light slurry, liquid and gas

Table 11-10 Function and system design

Description	Specification
Measuring principle	Coriolis
System architecture	• Point-to-point (1 Modbus RTU master - 1 transmitter slave) • Multidrop (1 Modbus RTU master - up to 32 transmitter slaves per segment. Max 247 slaves)

Note

NPT glands

When using NPT glands, user must take care when packing threads and installing cables that sufficient tightness is obtained to prevent ingress of moisture.

11.4.1 Design

Sensor design

Table 11-11 Sensor design

Description	Specification
Dimension and weight	See "Dimensions and weight" (Page 131)
Process connectors	• EN1092-1 B1, PN40, PN100 • ISO 228-1 G * • ASME B1.20.1 NPT * • ASME B16.5, Cl 150, Cl 600 • DIN 11851 ** • ISO 2852 ** • ISO 2853 **
Electrical connection	• M12 connector with 4-wire cable • Standard cable with M20 connector • Standard cable with polymer / brass / stainless steel cable glands (metric or NPT) • Armored cable with stainless steel armored cable glands (metric or NPT) • Conduit entries (metric or NPT)
Material	
Measuring tubes	• AISI 316L / EN 1.4435 • Hastelloy C22 / UNS N06022
Process connectors	• Standard: – AISI 316L / EN 1.4435 or EN 1.4404 – Hastelloy C22 / UNS N06022
Sensor enclosure	• EN 1.4301, AISI 316L
DSL enclosure	Aluminum with corrosion-resistant coating
Measuring tube design	One single bend tube welded directly to the process connections at each end
Self-draining design	Yes, when mounted in correct position (sensor type specific direction) DN4 self-draining not possible

*: Pressure ratings depend on sensor material
**: Pressure ratings depend on process connection dimension

11.4.2 Basic electrical requirement for master system

Table 11-12 Power unit

Description	Specification
Protection class	Class I (EN60950)
Galvanic isolation primary/secondary	SELV acc. to EN 60950 and EN 50178 or equivalent
Master/Receiver	Isolation 500 VAC

11.4.3 Cables and cable entries

The following information applies to cables and cable glands supplied as accessories to the device.

Table 11-13 Signal cable, basic data

Description	Specification
Number of conductors	4
Square area [mm^2]	0.326 (AWG 22/7)
Screen	Common shield for all 4 conductors
Outside color	Gray (RAL 7001)
External diameter [mm]	6.5
Maximum length	300 m (1968 ft.)
Installation environment	Industrial including chemical processing plants
Insulation material	Special polyolefin
Halogen-free	Yes
RoHS compliant	Yes
Torsional strength	• >3 million cycles at ± 180° on 200 mm • Not adapted for garland mounting (festoon)
Permissible temperature range [°C (°F)]	-40 to +80 (-40 to +176)
Min. bending radius allowed	Single 5 X ø

Description	Specification
Number of conductors	10 (5x2)
Square area [mm^2]	0.35
Screen [m]	Twisted and screened in pairs
Outside color	Blue
External diameter [mm]	12
Maximum length	15
Installation environment	Industrial including chemical processing plants

Description	Specification
Insulation material	PVC
Halogen-free	Yes
RoHS compliant	Yes
Permissible temperature range [°C (°F)]	-20 to +105

Table 11-14 Cable glands and entries

Description	Specification
Glands	• Material – Nylon[1)] – Brass/Ni plated – Stainless steel AISI 316/1.4404 • Cable cross section – ∅ 5 to 10 mm (0.20" to 0.39")
Entry	• 1 x M20 or 1 X NPT ½" for communication

[1)]: If operating temperature is below -20 °C (-4 °F), use Brass/Ni plated or stainless steel cable glands.

Note

Ex installation

Glands must be Ex-d certified.

11.5 Rated operating conditions

Table 11-15 Basic conditions

Description		Specification
Ambient temperature (°C[°F]) (Humidity max. 90 %)	Operation: Transmitter without display Transmitter with display	 -40 to +60 [-40 to +140] -20 to +60 [-4 to +140]*
Ambient temperature (°C[°F]) (Humidity max. 90 %)	Storage: Transmitter without display Transmitter with display	 -40 to +70 [-40 to +158] -40 to +70 [-40 to +158]
Climate class		DIN 60721-3-4
Altitude		Up to 2000 m (6560 ft)
Relative humidity [%]		95
EMC performance		EN/IEC 61326-1 (Industry)

* Display can be unreadable below -20°C

Table 11-16 Cleaning and sterilizing conditions

Description	Specification
Cleaning method	• CIP • SIP

11.6 Process variables

Table 11-17 Process variables

Description	Specification
Primary process variables	• Massflow • Density • Fluid temperature
Derived process variable	• Volumeflow

11.7 PED

The pressure equipment directive 2014/68/EU applies to the alignment of the statutory orders of the European member states for pressure equipment. Such equipment in the sense of the directive includes vessels, pipelines and accessories with a maximum allowable pressure of more than 0.5 bar above atmospheric. Flowmeters are considered as piping.

A detailed risk analysis of the flowmeter has been performed in accordance with the PED 2014/68/EU. All risks are assessed to be "none" provided that the procedures and standards referenced in these operating instructions are observed.

Division according to the danger potential

Flowmeters, which are categorized as piping, are divided into categories according to danger potential (medium, pressure, nominal diameter). The flowmeters fall into the categories I to III or they are manufactured according to Paragraph 3 - Sound Engineering Practice (SEP).

The following criteria are decisive for assessment of the danger potential, and are also shown in Diagrams 6 to 9.

Fluid group	Group 1 or 2
• Aggregate state	Liquid or gaseous
• Type of pressurized equipment – Pipeline	Product of pressure and volume (PS * V [barL])

The maximum allowable temperature for the used liquids or gases is the maximum process temperature which can occur, as defined by the user. This must be within the limits defined for the equipment.

Division of media (liquid/gaseous) into the fluid groups

Fluids are divided according to Article 13 into the following fluid groups:

Group 1 fluids

Explosive R phrases: for example: 2, 3 (1, 4, 5, 6, 9, 16, 18, 19, 44) 	**Very toxic** R phrases: for example: 26, 27, 28, 39 (32) 
Extremely flammable R phrases: for example: 12 (17) 	**Toxic** R phrases: for example: 23, 24, 25 (29, 31) 

Highly flammable R phrases: for example: 11, 15, 17 (10, 30) 	**Oxidizing** R phrases: for example: 7, 8, 9 (14, 15, 19) 
Flammable R phrases: for example11 (10) 	

Group 2 fluids

All fluids not belonging to Group 1.

Also applies to fluids which are for example dangerous to the environment, corrosive, dangerous to health, irritant or carcinogenic (if not highly toxic).

Conformity assessment

Flowmeters of categories I to III comply with the safety requirements of the directive. They are affixed with the CE mark and an EC declaration of conformity is provided.

The flowmeters are subjected to the conformity assessment procedure - Module H.

Flowmeters according to Article 4 Paragraph 3 are designed and manufactured in accordance with sound engineering practice in Denmark. PED conformity reference is not affixed to the CE mark.

Diagrams

- Gases of fluid group 1
- Pipelines according to Article 4 (a) (i) First dash
- Exception: unstable gases belonging to Categories I and II must be included in Category III.

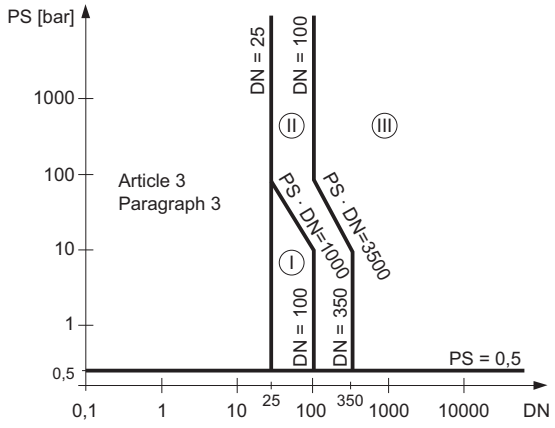

Figure 11-1 Diagram 6

- Gases of fluid group 2
- Pipelines according to Article 4 (a) (i) Second dash
- Exception: liquids at temperatures > 350 °C belonging to Category II must be included in Category III.

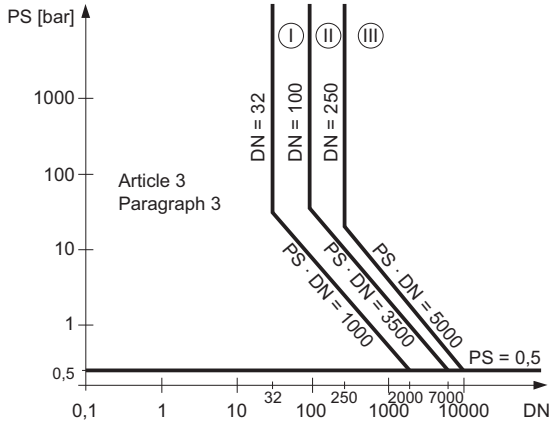

Figure 11-2 Diagram 7

- Liquids of fluid group 1

- Pipelines according to Article 4 (a) (ii) First dash

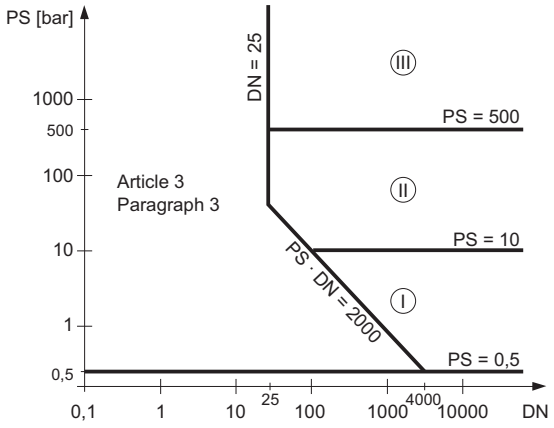

Figure 11-3 Diagram 8

- Liquids of fluid group 2
- Pipelines according to Article 4 (a) (ii) Second dash

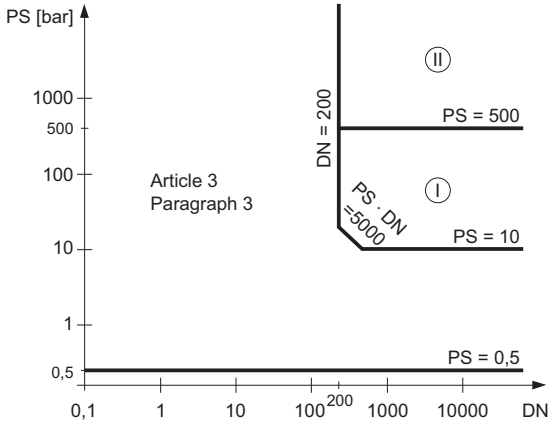

Figure 11-4 Diagram 9

11.8 Pressure - temperature ratings

Pressure - temperature ratings are determined by process connection material and applicable standards. The tables below detail the allowed maximum process pressure for sensor variants with stainless steel and Hastelloy measuring tubes.

With two major exceptions, the pressure rating of the flow sensors is independent of the process medium temperature. Design rules for flange connections in both the EN1092-1 and ASME B16.5 standards dictate pressure derating with increasing temperature. The charts below show the effect of process medium temperature on the pressure ratings for the flanges within the product program.

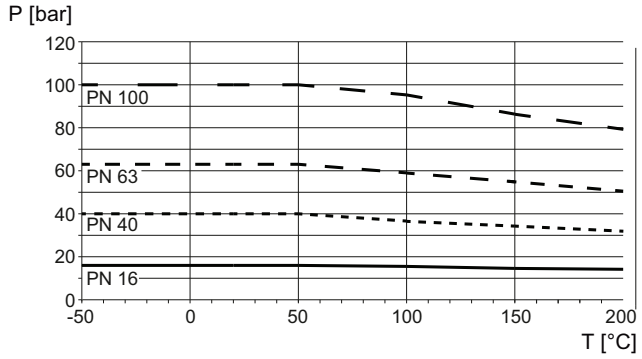

Figure 11-5 Metric flange ratings, EN 1092-1 (P: Process pressure; T: Process temperature)

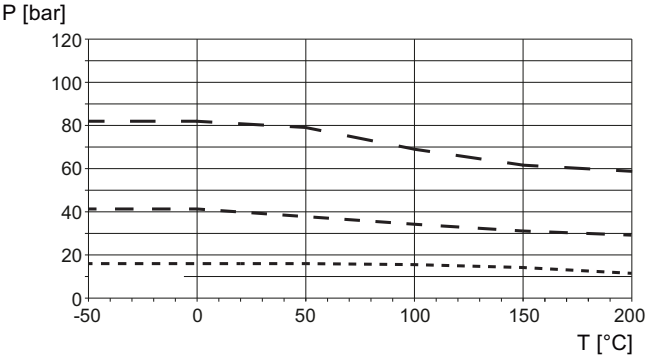

Figure 11-6 ANSI flange ratings, ASME B16.5 (P: Process pressure; T: Process temperature)

11.8.1 Pressure - temperature ratings (stainless steel sensors)

Table 11-18 EN1092-1 [bar]

PN (bar)	Temperature TS (°C)					
	-50	0	50	100	150	180
16	16.0	16.0	16.0	15.2	13.8	13.1
40	40.0	40.0	40.0	37.9	34.5	32.9
63	63.0	63.0	63.0	59.7	51.8	51.8
100	100.0	100.0	100.0	94.8	86.2	82.1

Table 11-19 ISO228-G and ASME B1.20.1 NPT [bar]

DN	Temperature TS (°C)	
	-40 to +38	180
1,5	230	220
3	230	230

DN	Temperature TS (°C)	
	-40 to +38	180
4	130	124
6	226	217
15	130	124

Table 11-20 ASME B16.5 [bar]

Class / Group	Temperature TS (°C)					
	-50	0	50	100	150	200
150 / 2.2	19	19	18.4	16.2	14.8	13.7
300 / 2.2	49.6	49.6	48.1	42.2	38.5	35.7
600 / 2.2	99.3	99.3	96.2	84.4	77.0	71.3

Table 11-21 DIN 11851 [bar]

PN (bar) / DN	Temperature TS (°C)				
	-50	0	50	100	140
25 / 50-100	25	25	25	25	25
40 / 10-40	40	40	40	40	40

Table 11-22 DIN 32676 & ISO 2852 [bar]

PN (bar) / DN	Temperature TS (°C)				
	-50	0	50	100	140
10 / 85-219.1	10	10	10	10	10
16 / 48.3-76.2	16	16	16	16	16
25 / 6.35-42.4	25	25	25	25	25

Table 11-23 DIN 11864 & ISO 2853 [bar]

PN (bar) / DN	Temperature TS (°C)				
	-50	0	50	100	140
25 / 50-100	25	25	25	25	25
40 / 10-40	40	40	40	40	40

Note

Test pressure

Maximum allowable test pressure (MATP) for the flowmeter and process connection is 1.5 times the nominal pressure up to 150 bar (2176 psi).

11.8.2 Pressure - temperature ratings (Hastelloy sensors)

Table 11-24 EN1092-1 [bar]

PN (bar)	Temperature TS (°C)					
	-50	0	50	100	150	180
16	16.0	16.0	16.0	16.0	16.0	16.0
40	40.0	40.0	40.0	40.0	40.0	40.0
63	63.0	63.0	63.0	63.0	63.0	63.0
100	100.0	100.0	100.0	100.0	100.0	100.0

Table 11-25 ISO228-G and ASME B1.20.1 NPT [bar]

DN	Temperature TS (°C)	
	-40 to +38	180
1,5	350	220
3	410	230
4	410	124
6	407	217
15	200	124

Table 11-26 ASME B16.5 [bar]

Class	Temperature TS (°C)					
	-50	0	50	100	150	180
150	20.0	20..	19.5	17.7	15.8	14.6
300	51.7	51.7	51.7	51.5	50.3	59.1
600	103.4	103.4	103.4	103.0	100.3	98.1

Table 11-27 DIN 11851 [bar]

PN (bar) / DN	Temperature TS (°C)				
	-50	0	50	100	140
25 / 50-100	25	25	25	25	25
40 / 10-40	40	40	40	40	40

11.9 Approvals

Table 11-28 Certificates and approvals

Description	Specification
ATEX	FCT010 flowmeter (can be installed in Zone 1 for gas and Zone 20/21 for dust): Certificate: SIRA 17ATEX1215X ⟨Ex⟩ II 2 G 1D 2D For gas: Ex db ia [ia Ga] IIC T6 Gb Ex db [ia Ga] IIC T6 Gb For dust: Ex ia [ia] IIIC T85°C Da Ex tb [ia Da] IIIC T85°C Db (Zone 20 only when installed as intrinsically safe) Ta = -40°C to +60°C
IECEx	FCT010 flowmeter (can be installed in Zone 1 for gas and Zone 20/21 for dust): Certificate: IECEx SIR 17.0046X For gas: Ex db ia [ia Ga] IIC T6 Gb Ex db [ia Ga] IIC T6 Gb For dust: Ex ia [ia] IIIC T85°C Da Ex tb [ia Da] IIIC T85°C Db (Zone 20 only when installed as intrinsically safe) (Ta = -40°C to +60°C)
CSA	
Ex Canada:	FCT010 transmitter (can be installed in Zone 1 for gas and Zone 20/21 for dust): Certificate: cCSAus 2508644 Ex db ia [ia Ga] IIC T6 Gb Ex ia [ia] IIIC T85°C Da Ex tb [ia Da] IIIC T85°C Db
For US:	FCT010 transmitter (can be installed in Zone 1 for gas and Zone 20/21 for dust) and Class I +II+III Group A, B, C, D, E, F: Certificate: cCSAus 2508644 Class I, II, III Division 1 Gp A, B, C, D, E, F, G Class I Zone 1: AEx db ia [ia Ga] IIC T6 Gb Class I Zone 1: AEx db [ia Ga] IIC T6 Gb Class II Zone 20: AEx ia [ia] IIIC T85°C Da Class II Zone 21: AEx tb [ia Da] IIIC T85°C Db
FC300	

Description	Specification
	ATEX Certificate : DEMKO 05 ATEX 138072X.
	Sitrans FC300 can be used in zone 0.
	Ex ia IIC T6…T3 Ga
IECEx	Certificate: IECEx ULD 17.0030
	Sitrans FC300 can be used in zone 0.
	Ex ia IIC T6…T3 Ga
Canada	Certificate. UL E232147
	Sitrans FC300 can be used in zone 0 and Class I Division 1.
	Class I Div. 1 Grp. A, B, C, D.
	Ex ia IIC T6…T3 IIC Ga
US	Certifikate. UL E232147
	Sitrans FC300 can be used in zone 0 and Class I Division 1.
	Class I Div. 1 Grp. A, B, C, DA
	AEx ia IIC T6…T3 IIC Ga
MASS 2100	
ATEX	Certificate : DEMKO 03 ATEX 135252X
	Sitrans FC MASS 2100 can be used in zone 0, 20
	Ex ia IIC T6…T3 Ga
	Ex ia IIIC T135°C…T180°C Da
IECEx	Certificate : IECEx ULD 17.0029
	Sitrans FC MASS 2100 can be used in zone 0, 20
	Ex ia IIC T6…T3 Ga
	Ex ia IIIC T135°C…T180°C Da
Canada	Certificate. UL E232147
	Sitrans FC MASS 2100 can be used in zone 0, 20 and Class I+II+III Division 1. Grp. A,B,C,D, E, F, G
	Class I+II+III Division 1. Grp. A,B,C,D, E, F, G.
	Ex ia IIC T6…T3 Ga
	Ex ia IIIC T135°C…T180°C Da
US	Certifikate: UL E232147
	Sitrans FC MASS 2100 can be used in zone 0 and Class I Division 1.
	Class I+II+III Division 1. Grp. A,B,C,D, E, F, G.
	AEx ia IIC T6…T3 Ga
	AEx ia IIIC T135°C…T180°C Da
Pressure equipment	2014/68/EU Pressure Equipment Directive (PED)
	Canadian Registration Number (CRN)

11.10 SensorFlash

Table 11-29 SensorFlash

Description	**Specification**
	SD card (S-300u)
Capacity	4 GB
File system support	FAT32 / 8.3
Temperature range Operation: Storage:	 -40 to +85 °C (-40 to 185 °F) -40 to +100 °C (-40 to 212 °F)

Dimensions and weight

12

12.1 Sensor dimensions

MASS2100 DI 1.0

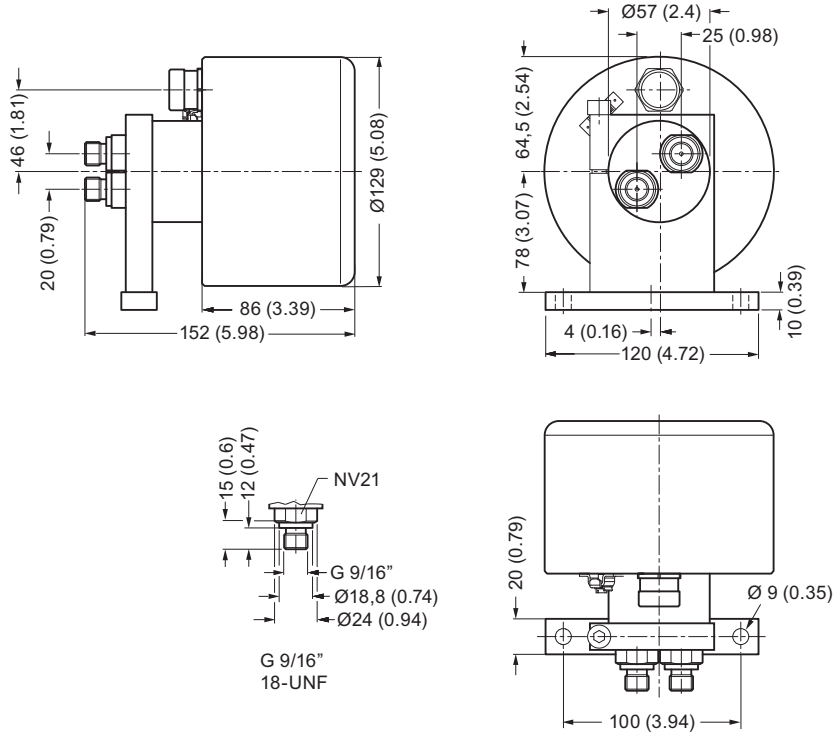

Figure 12-1 MASS2100 DI 1.0 only available with 9/16” 18-UNF connectors

MASS2100 DI 1.5 & DI 2.1

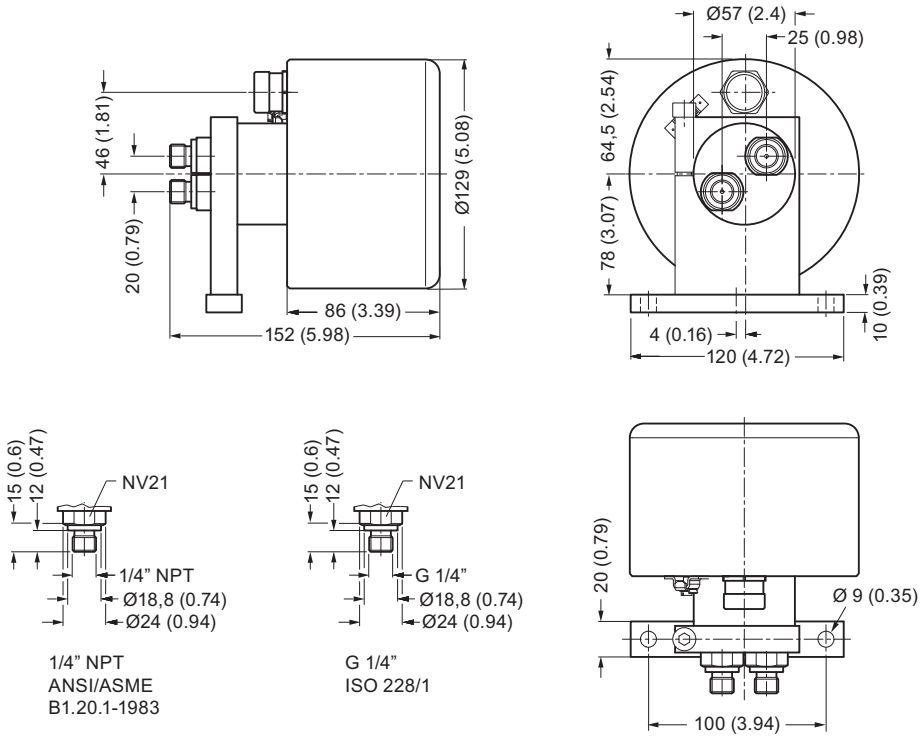

Figure 12-2 MASS 2100 DI 1.5 and DI 2.1, standard version, Dimensions in mm (inch)

MASS 2100 DI 1.5 High-temperature version

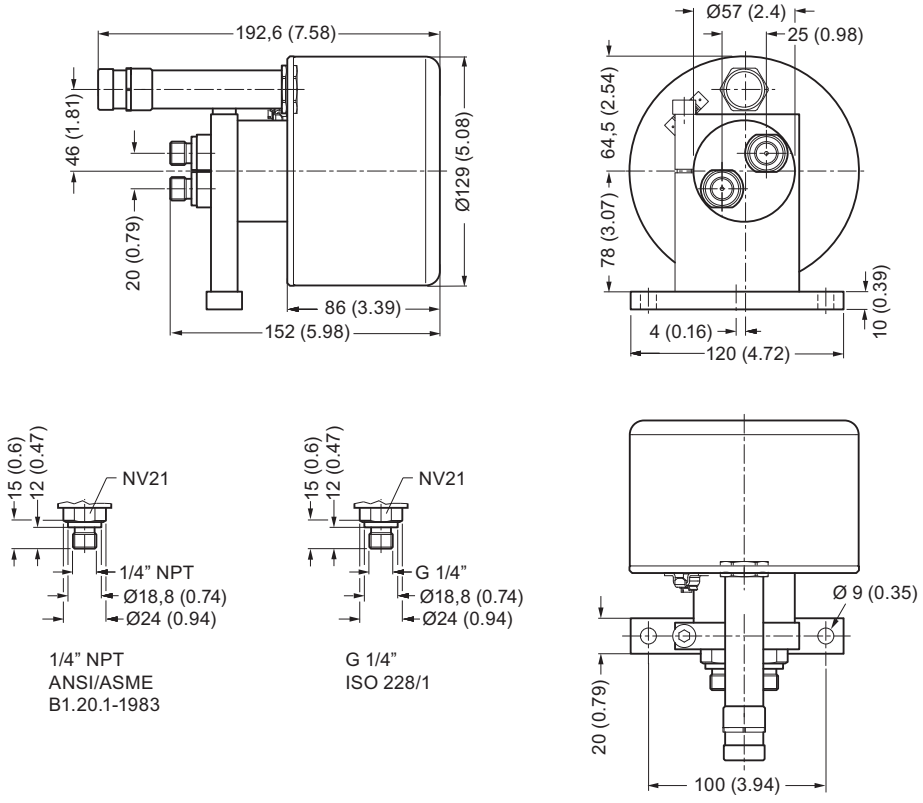

Figure 12-3 MASS 2100 DI 1.5, High-temperature version, Dimensions in mm (inch)

FC300 DN4 Standard version

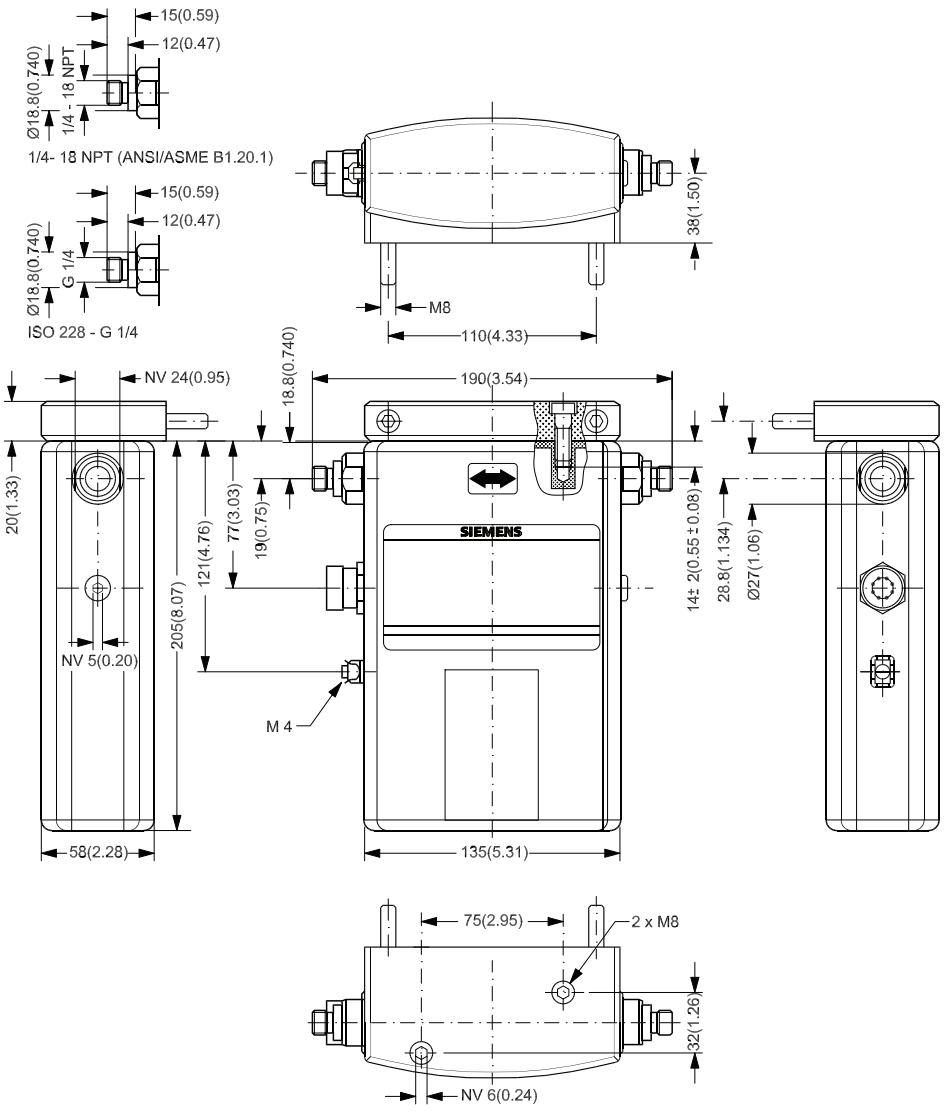

[1] FC300 DN4 HP only available with 9/16” 18UNF connectors

[2] Housing is not rated for pressure containment

FC300 DN4 high temperature version

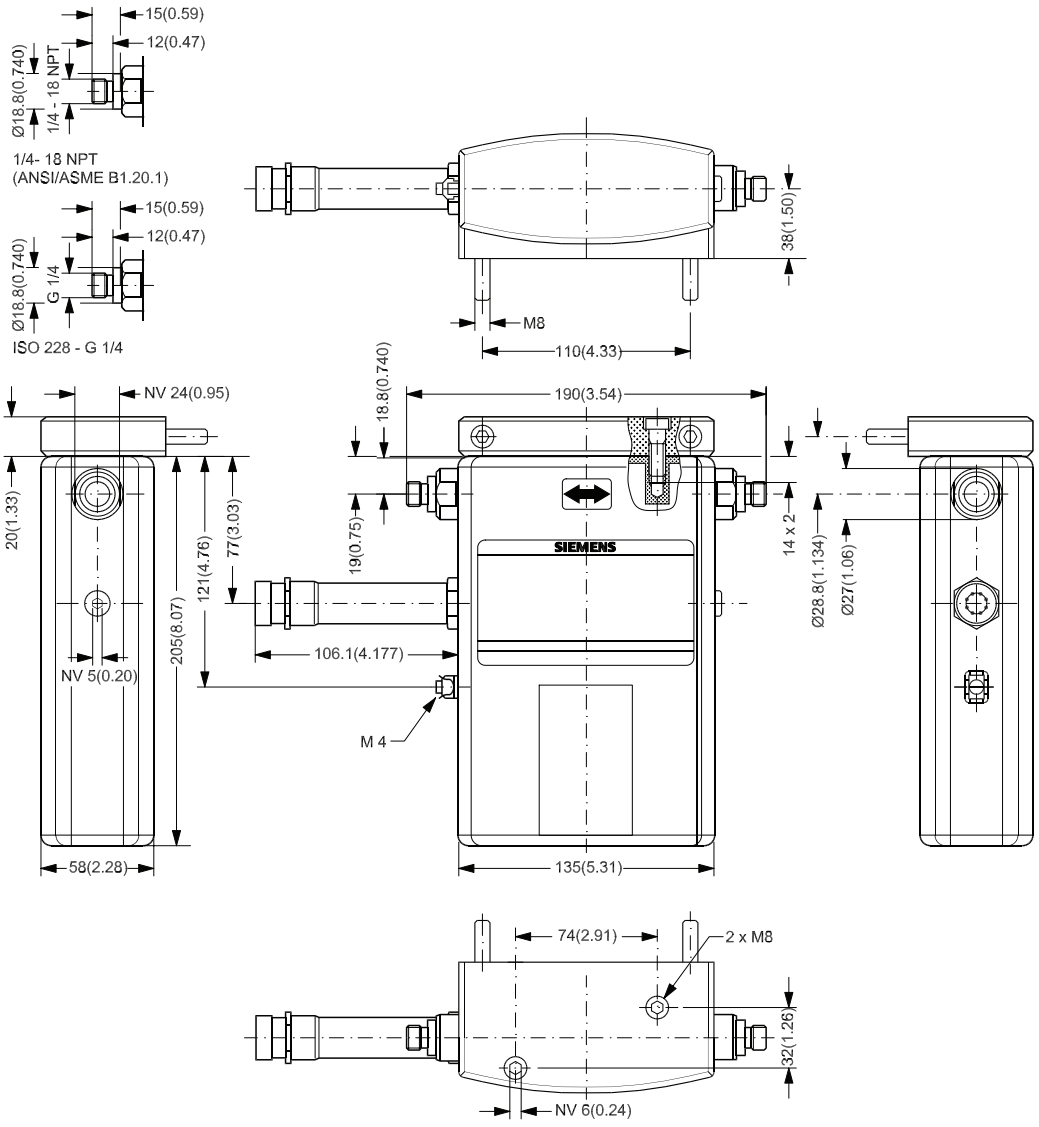

[3] Housing is not rated for pressure containment

12.2 MASS2100 DI3, DI6 & DI15

Remote versions

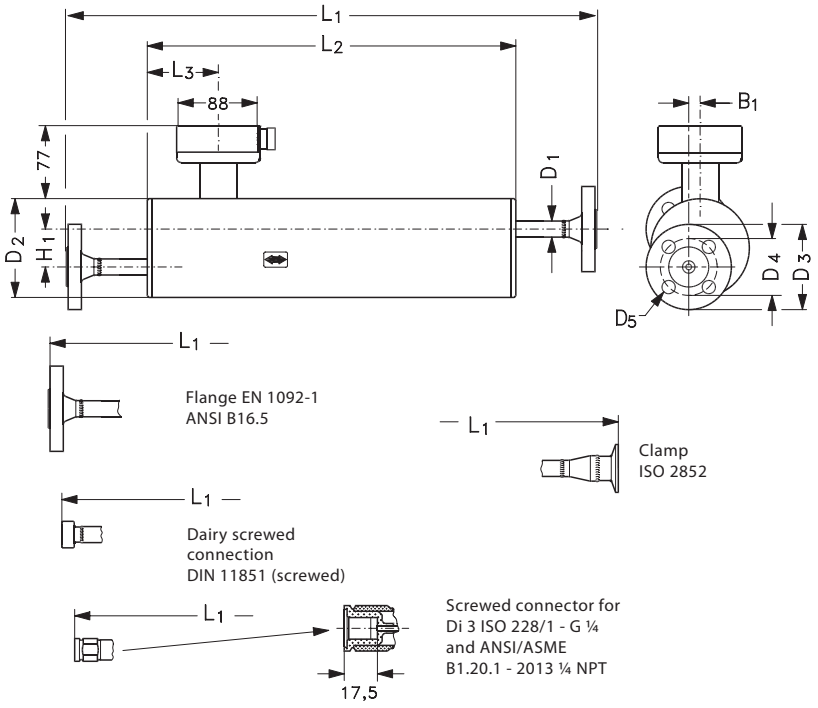

Table 12-1 Dimensions and weight, remote versions

Sensor size	Connection		L1	L2	L3	H1	B1	D1	D2	D3	D4	D5
DI (Inch)	Type (size)	Pressure rating	mm (inch)									
3 (1/8")	Pipe thread ISO 228/1 - G¼ (¼")	PN 100	400 (15.75)	280 (11.02)	75.5 (2.97)	60 (2.36)	0 (0)	21.3 (0.84)	104 (4.09)	-	-	-
	Pipe thread ANSI/ASME B 1.20.1 - ¼" NPT (¼")	PN 100	400 (15.75)	280 (11.02)	75.5 (2.97)	60 (2.36)	0 (0)	21.3 (0.84)	104 (4.09)	-	-	-

Sensor size	Connection		L1	L2	L3	H1	B1	D1	D2	D3	D4	D5
DI (Inch)	Type (size)	Pressure rating	mm (inch)									
6 (¼")	Flange EN 1092-1 (DN 10)	PN 100	580 (22.83)	390 (15.35)	62.0 (2.44)	40 (1.57)	12 (0.47)	17.0 (0.67)	104 (4.09)	100 (3.94)	70.0 (2.76)	14.0 (0.55)
		PN 40	560 (22.05)	390 (15.35)	62.0 (2.44)	40 (1.57)	12 (0.47)	17.0 (0.67)	104 (4.09)	90.0 (3.54)	60.0 (2.36)	14.0 (0.55)
	Flange ANSI B16.5 (½")	Class 150	623 (24.57)	390 (15.35)	62.0 (2.44)	40 (1.57)	12 (0.47)	17.0 (0.67)	104 (4.09)	88.9 (3.5)	60.5 (2.38)	15.7 (0.62)
		Class 600	608 (23.94)	390 (15.35)	62.0 (2.44)	40 (1.57)	12 (0.47)	17.0 (0.67)	104 (4.09)	95.3 (3.75)	66.5 (2.62)	15.7 (0.62)
	Screwed connection DIN 11851 (DN10)	PN 40	532 (20.94)	390 (15.35)	62.0 (2.44)	40 (1.57)	12 (0.47)	17.0 (0.67)	104 (4.09)		-	-
	Clamp ISO 2852 (25 mm)	PN 16	568 (22.44)	390 (15.35)	62.0 (2.44)	40 (1.57)	12 (0.47)	17.0 (0.67)	104 (4.09)	-	-	-
15 (½")	Flange EN 1092-1 (DN15)	PN 100	633 (24.96)	444 (17.48)	75.5 (2.97)	44 (1.73)	20 (0.79)	21.3 (0.84)	129 (5.08)	105 (2.95)	75.0 (4.13)	14.0 (0.55)
		PN 40	620 (24.41)	444 (17.48)	75.5 (2.97)	44 (1.73)	20 (0.79)	21.3 (0.84)	129 (5.08)	95.0 (3.74)	65.0 (2.56)	14.0 (0.55)
	Flange ANSI B16.5 (½")	Class 150	639 (25.16)	444 (17.48)	75.5 (2.97)	44 (1.73)	20 (0.79)	21.3 (0.84)	129 (5.08)	88.9 (3.5)	60.5 (2.38)	15.7 (0.62)
		Class 600	659 (25.98)	444 (17.48)	75.5 (2.97)	44 (1.73)	20 (0.79)	21.3 (0.84)	129 (5.08)	95.3 (3.75)	66.5 (2.62)	15.7 (0.62)
	Screwed connection DIN 11851 (DN15)	PN 40	586 (23.07)	444 (17.48)	75.5 (2.97)	44 (1.73)	20 (0.79)	21.3 (0.84)	129 (5.08)	-	-	-
	Clamp ISO 2852 (25 mm)	PN 16	622 (24.57)	444 (17.48)	75.5 (2.97)	44 (1.73)	20 (0.79)	21.3 (0.84)	129 (5.08)	-	-	-

12.3 Transmitter dimensions

Compact version

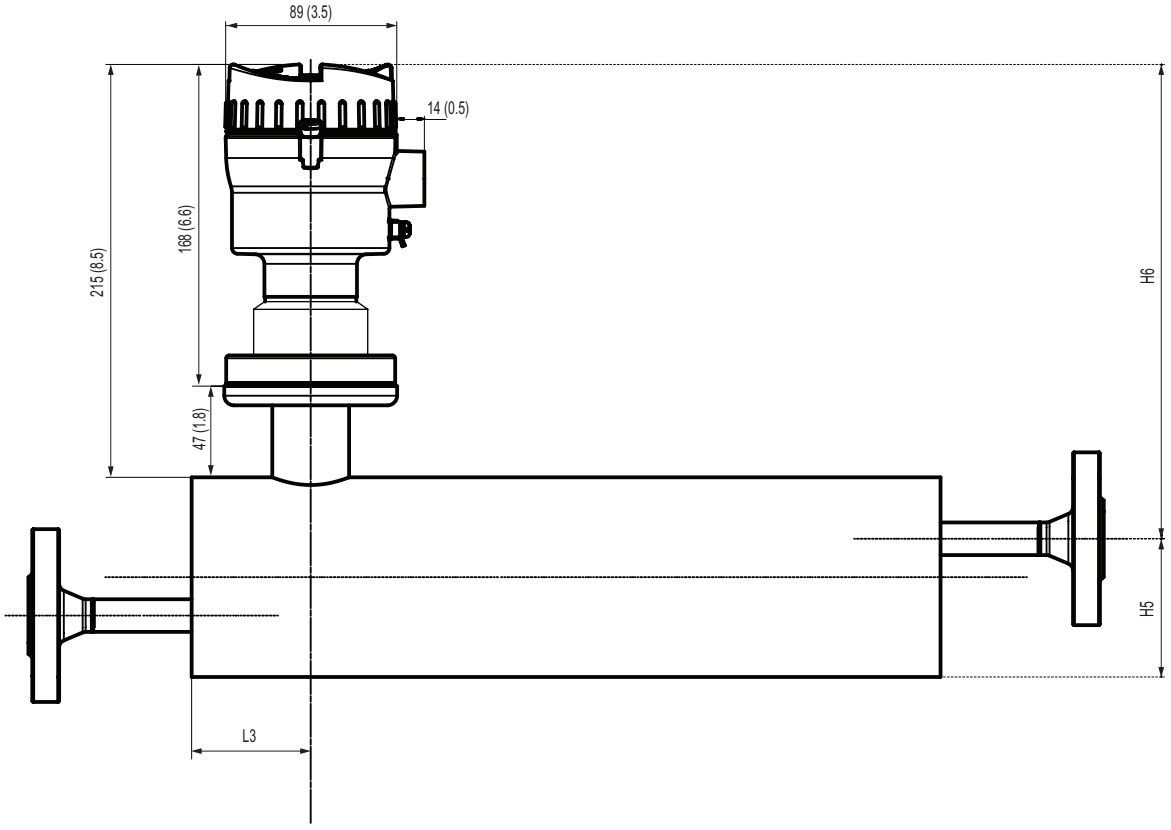

Table 12-2 MASS2100 with FCT010 transmitter compact

Sensor size	L_3	H_5	H_6	$H_5 + H_6$
	mm (inch)	mm (inch)	mm (inch)	mm (inch)
3 (1/8)	75.5 (2.9)	82 (3.23)	237 (9.3)	319 (12.5)
6 (¼)	62 (2.44)	72 (2.83)	247 (9.7)	319 (12.5)
15 (½)	75.5 (2.9)	86.5 (3.4)	257 (10.11)	343.5 (13.5)

Remote version

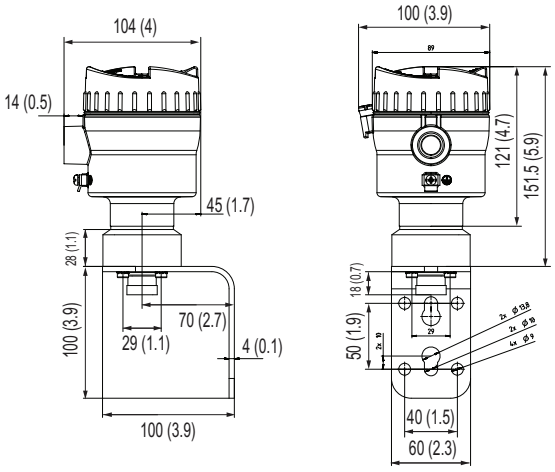

Dimensions in mm

Technical reference

A

The Cyclical Redundancy Checking (CRC) field is two bytes, containing a 16–bit binary value. The CRC value is first generated by the transmitting device, which appends the CRC to the message. The receiving device recalculates a CRC during receipt of the message, and compares the calculated value to the actual value it received in the CRC field. If the two values are not equal an error occurs.

In the following a short text description of how the CRC is calculated is provided. This description is then followed by a C programming example.

CRC calculation

1. Load a 16–bit register with FFFF hex (all 1's). Call this the CRC register.
2. Exclusive OR the first 8–bit byte of the message with the low–order byte of the 16–bit CRC register, putting the result in the CRC register.
3. Shift the CRC register one bit to the right (toward the LSB), zero–filling the MSB. Extract and examine the LSB.
4. (If the LSB was 0): Repeat Step 3 (another shift). (If the LSB was 1): Exclusive OR the CRC register with the polynomial value 0xA001 (1010 0000 0000 0001).
5. Repeat Steps 3 and 4 until 8 shifts have been performed. When this is done, a complete 8–bit byte will have been processed.
6. Repeat Steps 2 through 5 for the next 8–bit byte of the message. Continue doing this until all bytes have been processed.
7. The final content of the CRC register is the CRC value.
8. When the CRC is placed into the message, its upper and lower bytes must be swapped as described below.

Placing the CRC into the Message

When the 16–bit CRC (two 8–bit bytes) is transmitted in the message, the low-order byte will be transmitted first, followed by the high-order byte.

For example, if the CRC value is 1241 hex (0001 0010 0100 0001):

Addr	Func	Data count	Data n	Data n+1	Data n+2	Data n+x	CRC LO	CRC HI
							0x41	0x12

CRC programming example

```
/* Table of CRC values for high-order byte */
static __flash unsigned char auchCRCHi[] = {
0x00, 0xC1, 0x81, 0x40, 0x01, 0xC0, 0x80, 0x41, 0x01, 0xC0, 0x80,
0x41, 0x00, 0xC1, 0x81,
```

```
0x40, 0x01, 0xC0, 0x80, 0x41, 0x00, 0xC1, 0x81, 0x40, 0x00, 0xC1,
0x81, 0x40, 0x01, 0xC0,
0x80, 0x41, 0x01, 0xC0, 0x80, 0x41, 0x00, 0xC1, 0x81, 0x40, 0x00,
0xC1, 0x81, 0x40, 0x01,
0xC0, 0x80, 0x41, 0x00, 0xC1, 0x81, 0x40, 0x01, 0xC0, 0x80, 0x41,
0x01, 0xC0, 0x80, 0x41,
0x00, 0xC1, 0x81, 0x40, 0x01, 0xC0, 0x80, 0x41, 0x00, 0xC1, 0x81,
0x40, 0x00, 0xC1, 0x81,
0x40, 0x01, 0xC0, 0x80, 0x41, 0x00, 0xC1, 0x81, 0x40, 0x01, 0xC0,
0x80, 0x41, 0x01, 0xC0,
0x80, 0x41, 0x00, 0xC1, 0x81, 0x40, 0x00, 0xC1, 0x81, 0x40, 0x01,
0xC0, 0x80, 0x41, 0x01,
0xC0, 0x80, 0x41, 0x00, 0xC1, 0x81, 0x40, 0x01, 0xC0, 0x80, 0x41,
0x00, 0xC1, 0x81, 0x40,
0x00, 0xC1, 0x81, 0x40, 0x01, 0xC0, 0x80, 0x41, 0x01, 0xC0, 0x80,
0x41, 0x00, 0xC1, 0x81,
0x40, 0x00, 0xC1, 0x81, 0x40, 0x01, 0xC0, 0x80, 0x41, 0x00, 0xC1,
0x81, 0x40, 0x01, 0xC0,
0x80, 0x41, 0x01, 0xC0, 0x80, 0x41, 0x00, 0xC1, 0x81, 0x40, 0x00,
0xC1, 0x81, 0x40, 0x01,
0xC0, 0x80, 0x41, 0x01, 0xC0, 0x80, 0x41, 0x00, 0xC1, 0x81, 0x40,
0x01, 0xC0, 0x80, 0x41,
0x00, 0xC1, 0x81, 0x40, 0x00, 0xC1, 0x81, 0x40, 0x01, 0xC0, 0x80,
0x41, 0x00, 0xC1, 0x81,
0x40, 0x01, 0xC0, 0x80, 0x41, 0x01, 0xC0, 0x80, 0x41, 0x00, 0xC1,
0x81, 0x40, 0x01, 0xC0,
0x80, 0x41, 0x00, 0xC1, 0x81, 0x40, 0x00, 0xC1, 0x81, 0x40, 0x01,
0xC0, 0x80, 0x41, 0x01,
0xC0, 0x80, 0x41, 0x00, 0xC1, 0x81, 0x40, 0x00, 0xC1, 0x81, 0x40,
0x01, 0xC0, 0x80, 0x41,
0x00, 0xC1, 0x81, 0x40, 0x01, 0xC0, 0x80, 0x41, 0x01, 0xC0, 0x80,
0x41, 0x00, 0xC1, 0x81,
0x40
} ;

/* Table of CRC values for low-order byte */
static __flash char auchCRCLo[] = {
0x00, 0xC0, 0xC1, 0x01, 0xC3, 0x03, 0x02, 0xC2, 0xC6, 0x06, 0x07,
0xC7, 0x05, 0xC5, 0xC4,
0x04, 0xCC, 0x0C, 0x0D, 0xCD, 0x0F, 0xCF, 0xCE, 0x0E, 0x0A, 0xCA,
0xCB, 0x0B, 0xC9, 0x09,
0x08, 0xC8, 0xD8, 0x18, 0x19, 0xD9, 0x1B, 0xDB, 0xDA, 0x1A, 0x1E,
0xDE, 0xDF, 0x1F, 0xDD,
0x1D, 0x1C, 0xDC, 0x14, 0xD4, 0xD5, 0x15, 0xD7, 0x17, 0x16, 0xD6,
0xD2, 0x12, 0x13, 0xD3,
0x11, 0xD1, 0xD0, 0x10, 0xF0, 0x30, 0x31, 0xF1, 0x33, 0xF3, 0xF2,
0x32, 0x36, 0xF6, 0xF7,
0x37, 0xF5, 0x35, 0x34, 0xF4, 0x3C, 0xFC, 0xFD, 0x3D, 0xFF, 0x3F,
0x3E, 0xFE, 0xFA, 0x3A,
0x3B, 0xFB, 0x39, 0xF9, 0xF8, 0x38, 0x28, 0xE8, 0xE9, 0x29, 0xEB,
0x2B, 0x2A, 0xEA, 0xEE,
```

```
0x2E, 0x2F, 0xEF, 0x2D, 0xED, 0xEC, 0x2C, 0xE4, 0x24, 0x25, 0xE5,
0x27, 0xE7, 0xE6, 0x26,
0x22, 0xE2, 0xE3, 0x23, 0xE1, 0x21, 0x20, 0xE0, 0xA0, 0x60, 0x61,
0xA1, 0x63, 0xA3, 0xA2,
0x62, 0x66, 0xA6, 0xA7, 0x67, 0xA5, 0x65, 0x64, 0xA4, 0x6C, 0xAC,
0xAD, 0x6D, 0xAF, 0x6F,
0x6E, 0xAE, 0xAA, 0x6A, 0x6B, 0xAB, 0x69, 0xA9, 0xA8, 0x68, 0x78,
0xB8, 0xB9, 0x79, 0xBB,
0x7B, 0x7A, 0xBA, 0xBE, 0x7E, 0x7F, 0xBF, 0x7D, 0xBD, 0xBC, 0x7C,
0xB4, 0x74, 0x75, 0xB5,
0x77, 0xB7, 0xB6, 0x76, 0x72, 0xB2, 0xB3, 0x73, 0xB1, 0x71, 0x70,
0xB0, 0x50, 0x90, 0x91,
0x51, 0x93, 0x53, 0x52, 0x92, 0x96, 0x56, 0x57, 0x97, 0x55, 0x95,
0x94, 0x54, 0x9C, 0x5C,
0x5D, 0x9D, 0x5F, 0x9F, 0x9E, 0x5E, 0x5A, 0x9A, 0x9B, 0x5B, 0x99,
0x59, 0x58, 0x98, 0x88,
0x48, 0x49, 0x89, 0x4B, 0x8B, 0x8A, 0x4A, 0x4E, 0x8E, 0x8F, 0x4F,
0x8D, 0x4D, 0x4C, 0x8C,
0x44, 0x84, 0x85, 0x45, 0x87, 0x47, 0x46, 0x86, 0x82, 0x42, 0x43,
0x83, 0x41, 0x81, 0x80,
0x40
} ;

unsigned short int CRC16(unsigned char *puchMsg, unsigned short int
usDataLen)
{
   unsigned char uchCRCHi = 0xFF; /* high byte of CRC initialized */
   unsigned char uchCRCLo = 0xFF; /* low byte of CRC initialized */
   unsigned uIndex ;             /* will index into CRC lookup table
*/
   while(usDataLen--)             /* pass through message buffer */
   {
      uIndex = uchCRCHi ^ *puchMsg++ ; /* calculate the CRC */
      uchCRCHi = uchCRCLo ^ auchCRCHi[uIndex] ;
      uchCRCLo = auchCRCLo[uIndex] ;
   }
   #ifdef INTEL_LIKE_PROCESSOR
     return (unsigned short int)((uchCRCLo << 8) | uchCRCHi);
   #else
     return (unsigned short int)((uchCRCHi << 8) | uchCRCLo);
   #endif
}
```

See also

There are many ways of calculating a CRC checksum. For further information, please refer to the Modbus Organisation Website (http://www.modbus.org), where detailed descriptions and programming examples are available.

A.1 Exception handling

There is a defined set of exception codes to be returned by slaves in the event of problems. All exceptions are signalled in the response from the slave by adding 80 hex to the function code of the request and following this byte by an exception code.

Table A-1 Exception codes

Exception code (dec)	Exception text	Description
01	Illegal function	The function code received in the query is not an allowable action for the slave
02	Illegal data address	The data address received in the query is not an allowable address for the slave.
03	Illegal data value	A value contained in the query data field is not an allowable value for the addressed location. This may indicate a fault in the structure of the remainder of a complex request, such that the implied length is incorrect or the number of registers is too high.
04	Slave device failure	The request is for some other reason not acceptable. It may e.g. indicate that the data value to write is evaluated to be beyond limits.

A.2 Float definition

Stuffing of multi-byte numbers into multiple Modbus RTU registers differs among Modbus devices. "Big Endian" and "Little Endian" describe the order or sequence in which multi-byte data is stored in memory. This device uses (IEEE 741) a "Big-Endian" representation for addresses and data items as default. This means that when a numerical quantity larger than a single byte is transmitted, the MOST significant byte is sent first.

Float transmission order can be changed as described in Float transmission (Page 89).

Following example describes the Big-Endian representing of float IEEE741.

Value (decimal)	IEEE FP B MSB LSB	Register N		Register N + 1	
		high	low	high	low
100.0	42C80000h	42h	C8h	00h	00h
55.32	425D47AEh	42h	5Dh	47h	AEh
2.0	40000000h	40h	00h	00h	00h
1.0	3F800000h	3Fh	80h	00h	00h
-1.0	BF800000h	bFh	80h	00h	00h

Read absolute massflow (4.03001)

Query: 01,03,0B,B8,00,02,46,0A

Response: 01,03,04,40,C3,52,93,62,C8

Absolute mass-flow = 6.10383 kg/s

A.3 Sensor dimension dependent default settings

Mass flow

Sensor type	Sensor size	Default value	Unit:	Kg/s
Upper Limit Alarm and Upper Limit Warning				
FC400	DN 15	2,209		
	DN 25	6,136		
	DN 50	24,54		
	DN 80	62,83		
	DN 100	180,56		
	DN 150	298,61		
MASS2100	1	0,010		
	1.5	0,022		
	2.1	0,043		
	3	0,088		
FC300 DN4 HP	2	0,039		
FC300 DN4 C22	3	0,088		
FC300 DN4 316	3.5	0,120		
MASS2100	6	0,353		
	15	2,209		

Sensor type	Sensor size	Default value	Unit:	Kg/s
Lower Limit Alarm and Lower Limit Warning				
FC400	DN 15	-2,209		
	DN 25	-6,136		
	DN 50	-24,54		
	DN 80	-62,83		
	DN 100	-180,56		
	DN 150	-298,61		
MASS2100	1	-0,010		
	1.5	-0,022		
	2.1	-0,043		
	3	-0,088		
FC300 DN4 HP	2	-0,039		
FC300 DN4 C22	3	-0,088		
FC300 DN4 316	3.5	-0,120		
MASS2100	6	-0,353		
	15	-2,209		

Sensor type	Sensor size	Default value	Unit:	Kg/s
Alarm Hysteresis				
FC400	DN 15	0		
	DN 25	0		
	DN 50	0		
	DN 80	0		
	DN 100	0		
	DN 150	0		
MASS2100	1	0		
	1.5	0		
	2.1	0		
	3	0		
FC300 DN4 HP	2	0		
FC300 DN4 C22	3	0		
FC300 DN4 316	3.5	0		
MASS2100	6	0		
	15	0		

Low Flow Cut-off		Kg/s	Kg/h
FC400	DN 15	0,0103	37
	DN 25	0,0319	115
	DN 50	0,144	520
	DN 80	0,378	1360
	DN 100	0,783	2820
	DN 150	1,269	4570
MASS2100	1	0,0000272	0,0980
	1.5	0,0000542	0,195
	2.1	0,000117	0,42
	3	0,000250	0,90
FC300 DN4 HP	2	0,0000972	0,35
FC300 DN4 C22	3	0,000264	0,95
FC300 DN4 316	3.5	0,000389	1,4
MASS2100	6	0,00139	5
	15	0,0106	38

Volume flow

Sensor type	Sensor size	Default value	Unit:	Kg/s
Upper Limit Alarm and Upper Limit Warning				
FC400	DN 15	0,0225		
	DN 25	0,0626		
	DN 50	0,250		
	DN 80	0,641		
	DN 100	1		
	DN 150	2,3		
MASS2100	1	0,0002		
	1.5	0,00045		
	2.1	0,00088		
	3	0,0018		
FC300 DN4 HP	2	0,00080		
FC300 DN4 C22	3	0,0018		
FC300 DN4 316	3.5	0,0025		
MASS2100	6	0,0072		
	15	0,0451		

Sensor type	Sensor size	Default value	Unit:	Kg/s
Lower Limit Alarm and Lower Limit Warning				
FC400	DN 15	-0,0225		
	DN 25	-0,0626		
	DN 50	-0,250		
	DN 80	-0,641		
	DN 100	-1		
	DN 150	-2,3		
MASS2100	1	-0,0002		
	1.5	-0,00045		
	2.1	-0,00088		
	3	-0,0018		
FC300 DN4 HP	2	-0,00080		
FC300 DN4 C22	3	-0,0018		
FC300 DN4 316	3.5	-0,0025		
MASS2100	6	-0,0072		
	15	-0,0451		

Sensor type	Sensor size	Default value	Unit:	Kg/s
Alarm Hysteresis				
FC400	DN 15	0		
	DN 25	0		
	DN 50	0		
	DN 80	0		
	DN 100	0		
	DN 150	0		
MASS2100	1	0		
	1.5	0		
	2.1	0		
	3	0		
FC300 DN4 HP	2	0		
FC300 DN4 C22	3	0		
FC300 DN4 316	3.5	0		
MASS2100	6	0		
	15	0		

Low Flow Cut-off		m^3/s	m^3/h
FC400	DN 15	1,02778E-05	0,037
	DN 25	3,19444E-05	0,115
	DN 50	0,000144444	0,52
	DN 80	0,000377778	1,36
	DN 100	0,000783333	2,82
	DN 150	0,001269444	4,57
MASS2100	1	2,72222E-08	0,000098
	1.5	5,41667E-08	0,000195
	2.1	1,16667E-07	0,00042
	3	0,00000025	0,0009
FC300 DN4 HP	2	9,72222E-08	0,00035
FC300 DN4 C22	3	2,63889E-07	0,00095
FC300 DN4 316	3.5	3,88889E-07	0,0014
MASS2100	6	1,38889E-06	0,005
	15	1,05556E-05	0,038

Standard Volume flow

Sensor type	Sensor size	Default value	Unit:	Kg/s
Upper Limit Alarm and Upper Limit Warning				
FC400	DN 15	0,0225		
	DN 25	0,0626		
	DN 50	0,250		
	DN 80	0,641		
	DN 100	1		
	DN 150	2,25		
MASS2100	1	0,0002		
	1.5	0,00045		
	2.1	0,00088		
	3	0,0018		
FC300 DN4 HP	2	0,0008		
FC300 DN4 C22	3	0,0018		
FC300 DN4 316	3.5	0,0025		
MASS2100	6	0,0072		
	15	0,045		

Sensor type	Sensor size	Default value	Unit:	Kg/s
Lower Limit Alarm and Lower Limit Warning				
FC400	DN 15	-0,0225		
	DN 25	-0,0626		
	DN 50	-0,250		
	DN 80	0,641		
	DN 100	-1		
	DN 150	-2,25		
MASS2100	1	-0,0002		
	1.5	-0,00045		
	2.1	-0,00088		
	3	-0,0018		
FC300 DN4 HP	2	-0,0008		
FC300 DN4 C22	3	-0,0018		
FC300 DN4 316	3.5	-0,0025		
MASS2100	6	-0,0072		
	15	-0,045		

Sensor type	Sensor size	Default value	Unit:	Kg/s
Alarm Hysteresis				
FC400	DN 15	0		
	DN 25	0		
	DN 50	0		
	DN 80	0		
	DN 100	0		
	DN 150	0		
MASS2100	1	0		
	1.5	0		
	2.1	0		
	3	0		
FC300 DN4 HP	2	0		
FC300 DN4 C22	3	0		
FC300 DN4 316	3.5	0		
MASS2100	6	0		
	15	0		

Low Flow Cut-off		m^3/s	m^3/h
FC400	DN 15	0,000010278	0,037
	DN 25	0,000031944	0,115
	DN 50	0,000144444	0,52
	DN 80	0,000377778	1,36
	DN 100	0,000783333	2,82
	DN 150	0,001269444	4,57
MASS2100	1	0,000000027	0,000098
	1.5	0,000000054	0,000195
	2.1	0,000000117	0,00042
	3	0,000000250	0,0009
FC300 DN4 HP	2	0,000000097	0,00035
FC300 DN4 C22	3	0,000000264	0,00095
FC300 DN4 316	3.5	0,000000389	0,0014
MASS2100	6	0,000001389	0,005
	15	0,000010556	0,038

Fraction (if available)

Sensor type	Sensor size	Unit	Default value
Upper Limit Alarm and Upper Limit Warning			
FC400	DN 15	Mass flow Kg/s	2,209
		Volume flow m^3/s	0,0225
	DN 25	Mass flow Kg/s	6,136
		Volume flow m^3/s	0,0626
	DN 50	Mass flow Kg/s	24,54
		Volume flow m^3/s	0,250
	DN 80	Mass flow Kg/s	62,83
		Volume flow m^3/s	0,641
	DN 100	Mass flow Kg/s	180,56
		Volume flow m^3/s	1
	DN 150	Mass flow Kg/s	298,61
		Volume flow m^3/s	2,3
MASS2100	1	Mass flow Kg/s	n/a
		Volume flow m^3/s	n/a
	1.5	Mass flow Kg/s	0,022
		Volume flow m^3/s	0,00045
	2.1	Mass flow Kg/s	0,043
		Volume flow m^3/s	0,00088
	3	Mass flow Kg/s	0,088
		Volume flow m^3/s	0,0018
FC300 DN4 HP	2	Mass flow Kg/s	n/a
		Volume flow m^3/s	n/a
FC300 DN4 C22	3	Mass flow Kg/s	0,088
		Volume flow m^3/s	0,0018
FC300 DN4 316	3.5	Mass flow Kg/s	0,120
		Volume flow m^3/s	0,0025
MASS2100	6	Mass flow Kg/s	0,353
		Volume flow m^3/s	0,0072
	15	Mass flow Kg/s	2,209
		Volume flow m^3/s	0,0451

Sensor type	Sensor size	Unit	Default value
Lower Limit Alarm and Lower Limit Warning			
FC400	DN 15	Mass flow Kg/s	-2,209
		Volume flow m^3/s	-0,0225
	DN 25	Mass flow Kg/s	-6,136
		Volume flow m^3/s	-0,0626
	DN 50	Mass flow Kg/s	-24,54
		Volume flow m^3/s	-0,250
	DN 80	Mass flow Kg/s	-62,83
		Volume flow m^3/s	-0,641
	DN 100	Mass flow Kg/s	-180,56
		Volume flow m^3/s	-1
	DN 150	Mass flow Kg/s	-298,61
		Volume flow m^3/s	-2,3
MASS2100	1	Mass flow Kg/s	-n/a
		Volume flow m^3/s	-n/a
	1.5	Mass flow Kg/s	-0,022
		Volume flow m^3/s	-0,00045
	2.1	Mass flow Kg/s	-0,043
		Volume flow m^3/s	-0,00088
	3	Mass flow Kg/s	-0,088
		Volume flow m^3/s	-0,0018
FC300 DN4 HP	2	Mass flow Kg/s	n/a
		Volume flow m^3/s	n/a
FC300 DN4 C22	3	Mass flow Kg/s	-0,088
		Volume flow m^3/s	-0,0018
FC300 DN4 316	3.5	Mass flow Kg/s	-0,120
		Volume flow m^3/s	-0,0025
MASS2100	6	Mass flow Kg/s	-0,353
		Volume flow m^3/s	-0,0072
	15	Mass flow Kg/s	-2,209
		Volume flow m^3/s	-0,0451

Zero Point Adjustment

Sensor type	Sensor size	Default value Kg/s	
Standard Deviation Limit			
FC400	DN 15	0,0004	
	DN 25	0,004	
	DN 50	0,015	
	DN 80	0,036	
	DN 100	0,0832	
	DN 150	0,1376	
MASS2100	1	0	
	1.5	0,000002	
	2.1	0,000002	
	3	0,00002	
FC300 DN4 HP	2	0	
FC300 DN4 C22	3	0,00002	
FC300 DN4 316	3.5	0,00002	
MASS2100	6	0,0001	
	15	0,0004	

Zero Offset Limit			
FC400	DN 15	0,0103	
	DN 25	0,0319	
	DN 50	0,1444	
	DN 80	0,378	
	DN 100	0,783	
	DN 150	1,269	
MASS2100	1	0,0000272	
	1.5	0,0000542	
	2.1	0,000117	
	3	0,000250	
FC300 DN4 HP	2	0,0000972	
FC300 DN4 C22	3	0,000264	
FC300 DN4 316	3.5	0,000389	
MASS2100	6	0,00139	
	15	0,0106	

Alarm Hysteresis			
FC400	DN 15	0	
	DN 25	0	
	DN 50	0	
	DN 80	0	
	DN 100	0	
	DN 150	0	
MASS2100	1	0	
	1.5	0	
	2.1	0	
	3	0	
FC300 DN4 HP	2	0	
FC300 DN4 C22	3	0	
FC300 DN4 316	3.5	0	
MASS2100	6	0	
	15	0	

Low Flow Cut-off		**Kg/s**	**Kg/h**
FC400	DN 15	0,0103	37
	DN 25	0,0319	115
	DN 50	0,144	520
	DN 80	0,378	1360
	DN 100	0,783	2820
	DN 150	1,269	4570
MASS2100	1	0,0000272	0,0980
	1.5	0,0000542	0,195
	2.1	0,000117	0,42
	3	0,000250	0,90
FC300 DN4 HP	2	0,0000972	0,35
FC300 DN4 C22	3	0,000264	0,95
FC300 DN4 316	3.5	0,000389	1,4
MASS2100	6	0,00139	5
	15	0,0106	38

Modbus holding registers

B

B.1 Modbus addressing model

The device allows read/write access to the following standard Modbus RTU data holding register blocks:

- Holding registers (ref. 4x address range)

The minimum value of a writable **holding register** can be read by adding 10000 to the Modbus address of the register.

The maximum value of a writable **holding register** can be read by adding 20000 to the Modbus address of the register.

The default value of a writable **holding register** can be read by adding 30000 to the Modbus address of the register.

B.2 Modbus function codes

This device supports following function codes: 3, 8 and 16.

Function codes 3 and 16 are used for accessing registers, max. 16 registers per read/write request is accepted.

Function code 8 is used for reading Modbus communication diagnostic information.

Below the various function code are described.

Function code 3 (Read holding registers)

General exceptions:

- Requesting less than 1 or more than 16 registers => Exception 3 (Illegal data value)
- Requesting invalid start address or start address with invalid quantity => Exception 2 (Illegal data address)

Application exceptions:

- Application errors; min/max limit of parameter exceeded; or parameter write-protected => Exception 4 (Slave device error)

Holes/register alignment:

- The read command always returns data if no exception is given.
- Holes in the holding register map return value zero in all bytes. E.g. reading 2 registers starting at 4:0004 above will result in 2 bytes of "float B" followed by 2 zeroes.

Function code 3 example

Query

Slave address	1 byte
Function	1 byte
Starting Address Hi	1 byte
Starting Address Lo	1 byte
Quantity of Registers Hi	1 byte
Quantity of Registers Lo	1 byte
CRC	2 bytes

Response

Slave address	1 byte
Function	1 byte
Byte count	1 byte
Register Value Hi	1 byte
Register Value Lo	1 byte
:	:
Register Value Hi	1 byte
Register Value Lo	1 byte
CRC	2 bytes

Example: Read absolute massflow (address 3000)

Query: 1,3,11,184,0,2,70,10

Slave address = 1 (0x01)
Function = 3 (0x03)
Starting Address Hi, Lo = 11, 184 (0x0B,0xB8)
Quantity of Registers Hi , Lo = 0, 2 (0x00,0x02)
CRC = 70,10 (0x46, 0x0A)

Starting address 0x0BB8 = 3000
Quantity of registers = 0x0002 = 2

Response: 1,3,4,64,195,82,139,98,200

Slave address = 1 (0x01)
Function = 3 (0x03)
Byte Count = 4 (0x04)
Register 1 - Register Value Hi, Lo = 64, 195 (0x40, 0xC3)
Register 2 - Register Value Hi, Lo = 82, 139 (0x52, 0x93)
CRC = 98,200 (0x62, 0xC8)

Absolute mass flow = 0x40C35293 = 6.10383 kg/sec

Function code 16 (Write multiple registers)

General exceptions

- Writing less than 1 or more than 16 registers => Exception 3 (Illegal data value)
- If ByteCount is not exactly 2 times NoOfRegisters => Exception 3 (Illegal data value)
- Requesting invalid start address or start address with invalid quantity => Exception 2 (Illegal data address)

Application exceptions:

- Application errors; min/max limit of parameter exceeded; or parameter write-protected => Exception 4 (Slave device error)
- Application errors include writing to ReadOnly holding registers

Holes/register alignment:

- If start-address is not the start of a mapped holding register => Exception 2 (Illegal data address)
- Writing to holes is allowed (ie ignored - and no exception occurs) - except for the condition described above
- If the end address is only part of a mapped holding register item (e.g. one half of a float value), the action depends on the data type. Writing parts of all data types => Exception 4 (Slave device error)

Function code 16 example

Query

Slave address	1 byte
Function	1 byte
Starting Address Hi	1 byte
Starting Address Lo	1 byte
Quantity of Registers Hi	1 byte
Quantity of Registers Lo	1 byte
Byte Count	1 byte
Registers Value Hi	1 byte
Registers Value Lo	1 byte
:	:
Registers Value Hi	1 byte
Registers Value Lo	1 byte
CRC	2 bytes

Response

Slave address	1 byte
Function	1 byte
Starting Address Hi	1 byte

Starting Address Lo	1 byte
Quantity of Registers Hi	1 byte
Quantity of Registers Lo	1 byte
CRC	2 bytes

Example: Set baud rate to 115200 baud (address 529)

Query: 1,16,2,17,0,1,2,0,5,70,210

Slave address = 1 (0x01)
Function = 16 (0x10)
Starting Address Hi, Lo = 2, 17 (0x02,0x11)
Quantity of Registers Hi, Lo = 0, 1 (0x00,0x01)
Byte Count = 2 (0x02)
Registers Value Hi, Lo = 0, 5 (0x00,0x05)
CRC = 70,10 (0x46, 0x0A)

Starting address 0x0211 = 529
Number of registers = 0x0001 = 1
Data 0x0005 = (115200 = value 5)

Response: 1,16,2,17,0,1,80,116

Slave address = 1 (0x01)
Function = 16 (0x10)
Starting Address Hi, Lo = 2, 17 (0x02,0x11)
Quantity of Registers Hi, Lo = 0, 1 (0x00,0x01)
CRC = 80,116 (0x50, 0x74)

Function code 8 (Diagnostics)

Modbus function code 8 provides a series of tests for checking the communication system between a client (Master) device and a server (Slave).

The following diagnostics functions are supported:

Sub-function code (Dec)	Name	Description
00	Return Query Data	The data passed in the request data field is to be returned (looped back) in the response.
10	Clear Counters and Diagnostic Register	Clears all counters and the diagnostic register. Counters are also cleared upon power–up.
11	Return Bus Message Count	The response data field returns the quantity of messages that the remote device has detected on the communications system since its last restart, clear counters execution, or power–up.
12	Return Bus Communication Error Count	The response data field returns the quantity of CRC errors encountered by the remote device since its last restart, clear counters execution, or power–up.

Sub-function code (Dec)	Name	Description
13	Return Bus Exception Error Count	The response data field returns the quantity of MODBUS exception responses returned by the remote device since its last restart, clear counters execution, or power–up.
14	Return Slave Message Count	The response data field returns the quantity of messages broadcast or addressed to the remote device that the remote device has processed since its last restart, clear counters execution, or power–up.
15	Return Slave No Response Count	The response data field returns the quantity of messages addressed to the remote device for which it has returned no response (neither a normal response nor an exception response), since its last restart, clear counters execution, or power–up.
16	Return Slave NAK Count	The response data field returns the quantity of messages addressed to the remote device for which it returned a Negative Acknowledge (NAK) exception response, since its last restart, clear counters execution, or power–up.
17	Return Slave Busy Count	The response data field returns the quantity of messages addressed to the remote device for which it returned a Slave Device Busy exception response, since its last restart, clear counters execution, or power–up.
18	Return Bus Character Overrun Count	The response data field returns the quantity of messages addressed to the remote device that it could not handle due to a character overrun condition, since its last restart, clear counters execution, or power–up.
20	Clear Overrun Counter and Flag	Clears the overrun error counter and resets the error flag.

Function code 8 example

Query

Slave address	1 byte
Function	1 byte
Sub-function Hi	1 byte
Sub-function Lo	1 byte
Data Hi	1 byte
Data Lo	1 byte
:	:
Data Hi	1 byte
Data Lo	1 byte
CRC	2 bytes

Response

Slave address	1 byte
Function	1 byte
Sub-function Hi	1 byte
Sub-function Lo	1 byte
Data Hi	1 byte
Data Lo	1 byte
:	:
Data Hi	1 byte
Data Lo	1 byte
CRC	2 bytes

Example: Read Return Slave Message Count (address 529)

Query: 1,8,0,14,0,0,129,200

Slave address = 1 (0x01)
Function = 8 (0x08)
Sub-function Hi, Lo = 0, 14 (0x00,0x0E)
Data Hi, Lo = 0, 0 (0x00,0x00)
CRC = 129,200 (0x81, 0xC8)

Sub-function 0x000E = 14 = Read Return Slave Message Count

Response: 1,8,0,14,0,97,64,32

Slave address = 1 (0x01)
Function = 8 (0x08)
Sub-function Hi, Lo = 0, 14 (0x00,0x0E)
Data Hi, Lo = 0, 97 (0x00,0x65)
CRC = 64,32 (0x41, 0xE3)

Read Return Slave Message Count = 0x0065 = 97 message received

B.3 Modbus holding registers tables

In the following the Modbus RTU holding registers available for the device are described.

Note

All Write parameters require password access.

Table B-1 Process values

Modbus address	Data type / Size [bytes]	Parameter	Description	Default value [unit]	Value range	Access level
3000	float / 4	Mass flow	Measured mass flow	- [kg/s]	-	Read Only
3002	float / 4	Volume flow	Measured volume flow	- [m^3/s]	-	Read Only
3004	float / 4	Density	Measured density	- [kg/m^3]	-	Read Only

Modbus address	Data type / Size [bytes]	Parameter	Description	Default value [unit]	Value range	Access level
3010	float / 4	Media temperature	Measured temperature of the process media	- [°C]	-	Read Only
3023	float / 4	Frame Temperature	Measured temperature of the sensor frame(1)	- [°C]	-	Read Only

(1) Only available if the sensor has frame temperature measurement

Table B-2 Units for Process values and totalizer

Modbus address	Data type / Size [bytes]	Parameter	Description	Default value [unit]	Value range	Access level
7400	unsigned / 2	Mass flow unit	Select unit for mass flow process value	73: kilograms per second [Kg/s]	70: grams per second 71: grams per min 72: grams per hour 73: kilograms per second 74: kilograms per minute 75: kilograms per hour 76: kilograms per day 77: metric tons per minute 78: metric tons per hour 79: metric tons per day 80: pounds per second 81: pounds per minute 82: pounds per hour 83: pounds per day 84: short tons per minute 85: short tons per hour 86: short tons per day 87: long ton per hour 88: long ton per day 253: customized unit	Read / Write

Modbus address	Data type / Size [bytes]	Parameter	Description	Default value [unit]	Value range	Access level
7500	unsigned / 2	Volume flow unit	Select unit for volume flow process value	28: cubic meters per second [m^3/s]	15: cubic feet per minute 16: US gallons per minute 17: liters per minute 18: imperial gallons per minute 19: cubic meters per hour 22: US gallons per second 23: million US gallons per day 24: liters per second 25: million liters per day 26: cubic feet per second 27: cubic feet per day 28: cubic meters per second 29: cubic meters per day 30: imperial gallons per hour 31: imperial gallons per day 130: cubic feet per hour 131: cubic meters per minute 132: barrels (= 42 US gallons) per second 133: barrels (= 42 US gallons) per minute	Read / Write

Modbus address	Data type / Size [bytes]	Parameter	Description	Default value [unit]	Value range	Access level
					134: barrels (= 42 US gallons) per hour 135: barrels (= 42 US gallons) per day 136: US gallons per hour 137: imperial gallons per second 138: liters per hour 170: beer barrel per second 171: beer barrel per minute 172: beer barrel per hour 173: beer barrel per day 235: US gallons per day 253: custom volume flow unit	

Modbus address	Data type / Size [bytes]	Parameter	Description	Default value [unit]	Value range	Access level
7600	unsigned / 2	Density unit	Select unit for density process value	92: kilograms per cubic meter [kg/m³]	91: grams per cubic centimeters 92: kilograms per cubic meter 94: pounds per cubic foot 95: grams per milliliter 96: kilograms per liter 97: grams per liter 98: pounds per cubic inch 93: pounds per gallon 99: short tons per cubic yard 146: micrograms per liter 147: micrograms per cubic meter 170: milligrams per liter 253: custom mass flow unit	Read / Write
7700	unsigned / 2	Temperature unit	Select unit for temperature process value	32: °C	32: °C 33: °F 34: °R 35: K	Read / Write
8320	unsigned / 2	Mass totalizer units	Select unit for mass totalizer value	61: kilograms [kg]	60: grams 61: kilograms 62: metric tons 63: pounds 64: short tons 65: long tons 125: ounces 253: customized unit	Read / Write

Modbus address	Data type / Size [bytes]	Parameter	Description	Default value [unit]	Value range	Access level
8456	Float / 4	Custom unit factor mass flow value	Custom unit for mass flow value, only active if customized unit is selected Calculation is based on [kg/s]	1	0 to 60000000	Read / Write
7516	Float / 4	Custom unit factor volume flow value	Custom unit for volume flow value, only active if customized unit is selected Calculation is based on [m^3/s]	1	0 to 1000	Read / Write
8462	Float / 4	Custom unit factor density value	Custom unit for density value, only active if customized unit is selected Calculation is based on [kg/m^3]	1	0 to 60000	Read / Write
8474	Float / 4	Custom unit factor mass totalizer	Custom unit for mass totalizer, only active if customized unit is selected Calculation is based on [kg]	1	0 to 1000000	Read / Write

Table B-3 Identification

Modbus address	Data type / Size (bytes)	Parameter	Description	Default value (unit)	Value range	Access level
4000	String / 20	Manufacturer	Device manufacturer	Siemens	-	Read Only
4020	String / 10	Sensor Firmware Revision	Sensor firmware version	-	-	Read Only
4025	String / 16	SensorType	Sensor type. Also shown on the device nameplate	-	-	Read Only
4033	String / 20	Sensor Serial Number	Unique sensor serial number. Also shown on the device nameplate	-	-	Read Only
4095	String / 10	Sensor Hardware Revision	Sensor hardware version	-	-	Read Only
4100	String / 10	Sensor Frontend Type	Sensor hardware variant	-	-	Read Only
4121	String / 20	Sensor Order Number	Sensor order number part 1 (MLFB). Also shown on the device nameplate	-	-	Read Only

Modbus address	Data type / Size (bytes)	Parameter	Description	Default value (unit)	Value range	Access level
4131	String / 32	Sensor Order Number	Sensor order number part 2 (MLFB). Also shown on the device nameplate	-	-	Read Only
4147	String / 32	Sensor Order Number	Sensor order number part 3 (MLFB). Also shown on the device nameplate	-	-	Read Only
4164	String / 32	Long TAG	Enter a unique TAG name for the device (up to 32 characters)			
4180	String / 16	Descriptor	Enter a unique description for the measurement point (up to 16 characters)			
4188	String / 16	Startup Date	Enter the installation date of the device			

Table B-4 Operating conditions

Modbus address	Data type / Size [bytes]	Parameter	Description	Default value [unit]	Value range	Access level
2100	Unsigned / 2	Flow Direction	Define positive and negative flow direction. Default positive flow direction is indicated by the arrow on the sensor. Possible selections: • 0: Negative: The flow is measured '+' in default negative direction and '-' in default positive direction. • 1: Positive: The flow is measured '+' in default positive direction and '-' in default negative direction	1	0 to 1	Read / Write
2130	Unsigned / 2	Process Noise Damping	Select process noise damping level: 0: 55 ms filtering (Centrifugal Pump) 1: 110 ms filtering (Triplex Pump) 2: 220 ms filtering (Duplex Pump) 3: 400 ms filtering (Simplex Pump) 4: 800 ms filtering (Cam Pump)	2	0 Low to 4 High	Read / Write

Table B-5 Massflow

Modbus address	Data type / Size [bytes]	Parameter	Description	Default value [unit]	Value range	Access level
2125	Float / 4	Low Massflow Cut-Off	Set massflow limit for low flow cut-off. Below this limit massflow output is forced to zero. If Low Flow Cut-Off is set to 0, the cut-off functionality is disabled. **Notice**: It is recommended to set a lower value for gas applications.	Sensor size specific [kg/s] [1)]	0 to 1023	Read / Write
2426	Float / 4	Massflow Correction Factor	Specify correction factor for use in the massflow calculation	1	-1.999 to +1.999	Read / Write

[1)]: See Sensor dimension dependent default settings (Page 145)

Table B-6 Volume flow

Modbus address	Data type / Size [bytes]	Parameter	Description	Default value [unit]	Value range	Access level
2170	Float / 4	Low Volumeflow Cut Off	Define the numerical volumeflow value below which the volume flow output is forced to zero.	Sensor size specific [m^3/s] [1)]	0 to 0.177	Read / Write

[1)]: See Sensor dimension dependent default settings (Page 145)

Table B-7 Density

Mdbus address	Data type / Size [bytes]	Parameter	Description	Default value [unit]	Value range	Access level
2127	Float / 4	Empty Tube Limit	Define threshold value of empty tube	500 [kg/m^3]	-14 000 to +14 000	Read / Write
2129	Unsigned / 2	Empty Tube Detection	Set automatic detection of Empty Tube On/Off 0 = off (Empty tube is off). 1 = on (a density value below Empty Tube Limit triggers an alarm. All flow rate values are forced to zero %).	0	0 to 1	Read / Write

Mdbus address	Data type / Size [bytes]	Parameter	Description	Default value [unit]	Value range	Access level
2442	Float / 4	Density Correction Factor	Set density compensation value (gain) in order to make a density correction (scale factor). To increase the displayed density value with +0.5 %, set the density factor to 1.005. The displayed density value will now be 0.5 % higher than before	1	-1.999 to +1.999	Read / Write
2444	Float / 4	Density Correction Offset	Set density compensation value (offset) in order to make an offset on the measured density. To make the flowmeter show + 2 kg/m^3, change the density offset to 2.000 kg/m^3 in the 'Sensor' menu	0 [kg/m^3]	-1 400 to +1 400	Read / Write

Table B-8 Totalizer

Modbus address	Data type / Size [bytes]	Parameter	Description	Default value [unit]	Value range	Access level
2609	unsigned / 2	Totalizer State	Totalizer state • 0 = paused • 1= running	1	0 to 1	Read only
2610	float / 4	Totalizer Value	The totalized MASS value in kg	0 [kg]	Min. -1.70E+38 Max. 1.70E+38	Read Only

Modbus address	Data type / Size [bytes]	Parameter	Description	Default value [unit]	Value range	Access level
3018	Unsigned / 4	Totalizer fixed point part	The totalized MASS value in kg. Most significant word of the totalizer (MSW). The format of the totalizer is a TotalType. The TotalType represent a fixed point value in the MSW 32 bit and a fractional part in the LSW 32 bit. Example: 2.03 would be represented as fixed point part = 2 and fractional part = 30000000 Note: the data type is unsigned32, but shall be converted into a signed32 by the host since signed32 is not supported in the device. Example conversion to float64 tag by the host: Float64 tag = fixed point part + (fraction part/ 1000000000.0);	0 [kg]	Min -2147483648 Max 2247483647	Read Only
3020	Unsigned / 4	Totalizer fractional part	The totalized MASS value in kg. Least significant word of the totalizer (LSW). The format of the totalizer is a TotalType. The TotalType represent a fixed point value in the MSW 32 bit and a fractional part in the LSW 32 bit. Example: 2.03 would be represented as fixed point part = 2 and fractional part = 30000000 Note: the data type is unsigned32, but shall be converted into a signed32 by the host since signed32 is not supported in the device. Example conversion to float64 tag by the host: Float64 tag = fixed point part + (fraction part/ 1000000000.0);	0 [kg]	Min -999999999 Max 999999999	Read Only
2612	unsigned / 2	Reset totalizer	Reset totalizer Value	-	Enter **1** to reset	Read / Write

Modbus address	Data type / Size [bytes]	Parameter	Description	Default value [unit]	Value range	Access level
2613	unsigned / 2	Pause totalizer	Pause totalizer Totalizer can only be paused when running	-	Enter **1** to pause	Read / Write
2614	unsigned / 2	Resume totalizer	Resume totalizer Totalizer can only be resumed when paused	-	Enter **1** to pause	Read / Write

Table B-9 Access level

Modbus address	Data type / Size [bytes]	Parameter	Description	Default value [unit]	Value range	Access level
404	Unsigned / 2	Access level	Access level status	-	32 (logged in) 4 (logged out)	Read Only
412	Unsigned / 2	User password	Password to enable writing commands	-	2457 (enable user password 0 (disable user password)	Read / Write

Table B-10 Maintenance

Modbus address	Data type / Size [bytes]	Parameter	Description	Default value [unit]	Value range	Access level
700	Unsigned / 2	Set To Default	Reset all parameters to factory settings	-	Enter **1** to reset	Write
2700	Unsigned / 4	Operating Time Total	Total operating time since first power up	0 [h]	-	Read Only
2702	Unsigned / 4	Operating Time	Operating time since last power up	0 [h]	-	Read Only
4088	String / 14	Firmware Time Stamp	Firmware time stamp specifies the date and time when the sensor firmware was built	-	-	Read Only
4105	String / 32	Sensor PCBA Serial Number	Serial number of the sensor electronic	-	-	Read only

Table B-11 Device diagnostics

Modbus address	Data type / Size [bytes]	Parameter	Description	Default value [unit]	Value range	Access level
2756	Float / 4	Driver Current	Actual sensor driver current. The actual driver current is viscosity and sensor size dependent	- [A]	0 to 0.124	Read Only
2758	Float / 4	Pick-up Amplitude 1	Actual pick-up 1 amplitude	- [V]	0 to 0 9999	Read Only
2760	Float / 4	Pick-up Amplitude 2	Actual pick-up 2 amplitude	- [V]	0 to 0 9999	Read Only
2762	Float / 4	Sensor Frequency	Actual sensor frequency	- [Hz]	0 to 1 023	Read Only
3032	Float / 4	PCB Temperature	Actual sensor electronic temperature	- [C°]	-50 to 200	Read Only

Table B-12 Aerated flow

Modbus address	Data type / Size [bytes]	Parameter	Description	Default value [unit]	Value range	Access level
2200	Unsigned / 2	Aerated Flow Alarm Limit	Alarm limit calculated in per cent of accepted bad measurements.	80 [%]	0 to 99	Read / Write
2201	Unsigned / 2	Aerated Flow Warning Limit	Warning limit calculated in per cent of accepted bad measurements	0 [%]	0 to 99	Read / Write
2202	Unsigned / 2	Measurement Sample Time	The time period over which the actual percentage of bad measurements is calculated	5 [s]	1 to 10	Read / Write
2203	Unsigned / 2	Aerated Flow Filter	Aerated flow filter 0: Disabled 1: Enabled 2: Auto Auto means that filtering starts automatically when aerated flow is measured.	2	0 to 2	Read / Write
2204	Unsigned / 2	Filter Time Constant	PV Filter Time Constant 0: 0.5 seconds 1: 1 second 2: 2 seconds 3: 5 seconds 4: 10 seconds 5: 20 seconds 6: 30 seconds 7: User Defined Value	4	0 to 7	Read / Write
2205	Float / 4	Filter Start Hysteresis	The filter is active when the hysteresis value is exceeded. Aerated Flow Filter must be set to Auto	0.015 [V]	0 to 0.124	Read / Write
2207	Unsigned / 2	Minimum Filtering Time	The filtering time is reset each time hysteresis band is exceeded	10 [ms cycles]	0 to 65535	Read / Write

Modbus address	Data type / Size [bytes]	Parameter	Description	Default value [unit]	Value range	Access level
2214	Unsigned / 2	Pickup Amplitude Filter	Enable/disable pickup amplitude filter. 0 = Disable 1 = Enable	1	0 to 1	Read / Write
2215	Unsigned / 2	Bad Measurement Count	Number of bad measurements counted during the last period	0	0 - 65535	Read Only
2216	Unsigned / 2	Filter Iteration	Set the number of times to repeat the same filter. Increasing the number will increase the damping. Active only if Filter Time Constant is set to 7.	3	1 to 5	Read / Write
2217	Unsigned / 2	Bandwidth Factor	Increase the Bandwidth Factor to reduce the LP (low pass) bandwidth filtering. Active only if Filter Time Constant is set to 7.	2	0 to 4	Read / Write
2218	Unsigned / 2	Filter Pole Shift	Configure the bandwidth and damping in the stop band. A high number will give a small bandwidth and an increased damping in the stop band. Active only if Filter Time Constant is set to 7.	2	1 to 5	Read / Write

Table B-13 Zero point adjustment

Modbus address	Data type / Size [bytes]	Parameter	Description	Default value [unit]	Value range	Access level
2132	Unsigned / 2	Zero Point Adjustment	Select zero-point adjustment method. Automatic zero point adjustment is recommended. • 0 = Auto • 1 = Manual	0	0 to 1	Read / Write
2133	Float / 4	Manual Zero Point Offset	Enter agreed zero point offset value for manual zero point adjustment mode.	0 [kg/s]	0 to 1023	Read / Write
2135	Unsigned / 2	Zero Point Duration	Define duration of zero point adjustment.	30 [s]	1 to 999	Read / Write
2136	Float / 4	Standard Deviation	Standard deviation during auto zero point adjustment	0 [kg/s]	-1023 to +1023	Read only

Modbus address	Data type / Size [bytes]	Parameter	Description	Default value [unit]	Value range	Access level
2138	Float / 4	Standard Deviation Limit	Set limit for zero point adjustment **Standard Deviation** value. If the **Standard Deviation** exceeds the **Standard Deviation Limit**, the auto zero point adjustment is aborted.	Sensor size specific [kg/s] [1)]	0 to +1023	Read / Write
2140	Float / 4	Zero Point Offsett Limit	Set limit for zero point offset. If the zero point offset exceeds the zero point offset limit, the zero point offset cannot be stored	Sensor size specific [kg/s] [1)]	-1023 to +1023	Read / Write
2142	Float / 4	Zero Point Offset Value	Default zero point offset based on factory calibration of sensor. A Zero point offset compensates for sensor variations due to process conditions.	0 [kg/s]	-1023 to +1023	Read only
2144	Unsigned / 2	Zero Point Adjust Progress	Shows the progress of the currently running Zero Point adjustment in percentage	0 [%]	0 to 100	Read Only
2145	Unsigned / 2	Zero Point Adjust Status	Status of the last zero point adjustment performed Every high bit ('1') represents an error occurred in the last zero point adjustment performed. No high bits equals ok. Bit 0 = Zero sigma limit exceeded Bit 1 = Zero offset limit exceeded Bit 2 = Quality of zero point conditions	-	• 1 • 2 • 4	Read Only
2180	Unsigned / 2	Start Zero Point Adjustment	Start automatic zero point adjustment. The automatic zero point adjustment determines the application specific zero point offset automatically. Possible selections: • 0: Idle • 1: Running • 2: Start	0	0 to 2	Read / Write

[1)]: See Sensor dimension dependent default settings (Page 145)

Table B-14 Modbus

Modbus address	Data type / Size [bytes]	Parameter	Description	Default value [unit]	Value range	Access level
527	Unsigned / 2	Float byte order	The float byte order used in Modbus messages. Selection 0: Byte order: 1-0-3-2 Selection 1: Byte order: 0-1-2-3 Selection 2: Byte order: 2-3-0-1 Selection 3: Byte order: 3-2-1-0 The first mentioned byte is the first byte sent. Byte 3 corresponds to the left-most byte (MSB) of a 32 bit float in big endian format, byte 0 corresponds to the right-most byte (LSB).	3	0 to 3	Read / Write
528	Unsigned / 2	Modbus Address	Set Modbus Device Address	1	1 to 247	Read / Write
529	Unsigned / 2	Baudrate	Set communication baudrate. Following baud rates are available: • 0 = 9600 • 1 = 19200 (Default) • 2 = 115200 • 4 = 38400 • 5 = 57600 • 6 =76800	1	0 to 5	Read / Write
530	Unsigned / 2	Modbus Parity Framing	RS 485 parity and framing 8 databits are always used 0 = even parity, 1 stopbit 1 = odd parity, 1 stopbit 2 = no parity, 2 stopbits	0	0 to 2	Read / Write
600	Unsigned / 2	Restart communication	Restart Modbus communication Write: • 0 = No effect • 1 = Restart Read: • Always 0	-	0 to 1	Write

Table B-15 Sensor

Modbus address	Data type / Size [bytes]	Parameter	Description	Default value [unit]	Value range	Access level
2113	Float / 4	Minimum Frame Temperature	Lower limit of the frame temperature	-50 [°C]		Read only
2115	Float / 4	Maximum Frame Temperature	Lower limit of the frame temperature	200 [°C]		Read only
4043	String / 16	Sensor size	Nominal sensor diameter (DN)	-	-	Read only
4051	String / 32	Hazardous area approval	Hazardous area approval of the sensor	-	-	Read only
4078	String / 20	Wetted materials	Sensor enclosure material	-	-	Read Only

Table B-16 Volume flow calibration

Modbus address	Data type / Size [bytes]	Parameter	Description	Default value [unit]	Value range	Access level
2103	Float / 4	Maximum Volume flow Capacity	Maximum volume flow measurement capacity of the sensor	Sensor size specific [m^3/s] [1)]	0 to 0.177	Read only

[1)]: See Sensor dimension dependent default settings (Page 145).

Table B-17 Mass flow calibration

Modbus address	Data type / Size [bytes]	Parameter	Description	Default value [unit]	Value range	Access level
2101	Float / 4	Maximum Mass flow Capacity	Maximum mass flow measurement capacity of the sensor	Sensor size specific [kg/s] [1)]	0 to 1023	Read only
2402	Float / 4	Calibration Factor	Factory-set sensor-specific calibration factor. The calibration factor is shown on the sensor nameplate	-	Min: 5.00E +07 Max: 4.29E +09	Read only

[1)]: See Sensor dimension dependent default settings (Page 145).

Table B-18 Density calibration

Modbus address	Data type / Size [bytes]	Parameter	Description	Default value [unit]	Value range	Access level
2428	Float / 4	Density Calibration Offset	Specify an offset in the density flow calculation	-	-14 000 to +14 000	Read only
2430	Float / 4	Density Calibration Factor	Specify gain factor in the density flow calculation	-	-2147483583 to 2147483583	Read only

Modbus address	Data type / Size [bytes]	Parameter	Description	Default value [unit]	Value range	Access level
2432	Float / 4	Dens. Comp. Tube Temp.	Specifies a tube temperature coefficient in the density calculation	-	-0.001953 to +0.001953	Read only
2434	Float / 4	Dens. Comp. Frame Temp.	Specifies a frame temperature coefficient in the density calculation	-	-0.001953 to +0.001953	Read only

Table B-19 Simulation

Modbus address	Data type / Size [bytes]	Parameter	Description	Default value [unit]	Value range	Access level
2764	Float / 4	Mass flow Simulation Value	Set mass flow simulation value. The mass flow will be set to this value on all outputs, if **Simulation Mass Flow** is enabled	0 [kg/s]	-1023 to +1023	Read / Write
2766	Float / 4	Density Simulation Value	Set density simulation value. The density will be set to this value on all outputs, if **Simulation Density** is enabled	1000 [kg/m^3]	-20000 to +20000	Read / Write
2768	Float / 4	Media Temperature Simulation Value	Set media temperature simulation value. The media temperature will be set to this value on all outputs if **Simulation media Temperature** is enabled	0 [°C]	-50 to +200	Read / Write
2770	Float / 4	Frame Temperature Simulation Value	Set frame temperature simulation value. The frame temperature will be set to this value on all outputs if **Simulation Frame Temperature** is enabled	0 [°C]	-50 to +200	Read / Write

Modbus address	Data type / Size [bytes]	Parameter	Description	Default value [unit]	Value range	Access level
2772	Float / 4	Volume flow Simulation Value	Set volume flow simulation value. The volume flow will be set to this value on all outputs, if **Simulation Volume Flow** is enabled	m^3/s	-65 to +65	Read / Write
2780	Unsigned / 2	Enable Simulation	Activate simulation. Select one of the following values: • Bit 0: Mass flow • Bit 1: Density • Bit 2: Volume flow • Bit 3: Media temperature • Bit 4: Frame temperature	0	0 to 63	Read / Write

Table B-20 Alarms

Modbus address	Data type / Size [bytes]	Parameter	Description	Default value [unit]	Value range	Access level
3012	Unsigned / 4	Alarm Group 1	The following bit is set in case of active alarm: • Bit 4: Power Supply Malfunction • Bit 6: Temperature Circuit Malfunction • Bit 10: Measurement Out Of Range • Bit 14: Calibration Malfunction • Bit 15: Compensation Out Of Range • Bit 17: Pickup Malfunction • Bit 23: Driver Malfunction • Bit 26: Measurement Out Of Range • Bit 27: Mass Flow Max Limit Exceeded • Bit 28: Volume Flow Max Limit Exceeded • Bit 29: Density Max Limit Exceeded • Bit 30: Min Tube Temp Exceeded • Bit 31: Max Tube Temp Exceeded	-	-	Read Only

Modbus address	Data type / Size [bytes]	Parameter	Description	Default value [unit]	Value range	Access level
3014	Unsigned / 4	Alarm Group 2	The following bit is set in case of active alarm: • Bit 0: Min Frame Temp Exceeded • Bit 1: Max Frame Temp Exceeded • Bit 2: Zero Sigma Limit Exceeded • Bit 3: Zero Offset Limit Exceeded • Bit 4: Quality Of Zero Point Conditions • Bit 5: Empty Pipe • Bit 6: Sensor Partially Filled • Bit 7: Storage Malfunction • Bit 8: System Internal • Bit 14: Unstable Measurement Conditions • Bit 15: Auto-filtering enabled • Bit 23: Sensor Startup	-	-	Read Only

Table B-21 Quality code for process values

Modbus address	Data type / Size [bytes]	Parameter	Description	Default value [unit]	Value range	Access level
3014	Unsigned / 4	Alarm Group 2	Quality code of a measured value	Process values for quality codes Media temperature Density Volume flow Mass flow Quality code for each process value consist of 2 bits: Bit 24/25: Media temperature Bit 26/27: Density Bit 28/29: Volume flow Bit 30/31: Mass flow	11 Good 01 Reserved 10 Simulation 00 Bad	Read Only

Certificates and support

C

C.1 Technical support

If you have any technical questions about the device described in these Operating Instructions and do not find the right answers, you can contact Customer Support:

- Via the Internet using the **Support Request:**
  Support request (http://www.siemens.com/automation/support-request)
- Via Phone:
  - Europe: +49 (0)911 895 7222
  - America: +1 423 262 5710
  - Asia-Pacific: +86 10 6475 7575

Further information about our technical support is available on the Internet at
Technical support (http://support.automation.siemens.com/WW/view/en/16604318)

Service & Support on the Internet

In addition to our documentation, we offer a comprehensive knowledge base online on the Internet at:

Service and support (http://www.siemens.com/automation/service&support)

There you will find:

- The latest product information, FAQs, downloads, tips and tricks.
- Our newsletter, providing you with the latest information about your products.
- Our bulletin board, where users and specialists share their knowledge worldwide.
- You can find your local contact partner for Industry Automation and Drives Technologies in our partner database.
- Information about field service, repairs, spare parts and lots more under **Services**.

Additional Support

If you have additional questions about the device, please contact your local Siemens representative and offices at:

Local contact person (http://www.automation.siemens.com/partner)

C.2 QR code label

A QR code label can be found on the device. With the use of a smart phone, the QR code provides a direct link to a website with information specific to the device, such as manuals, FAQs, certificates, etc.

C.3 Certificates

You can find certificates on the Internet at online support portal (http://www.siemens.com/processinstrumentation/certificates) or on an included DVD.

Certification documents including calibration report are supplied with each sensor included on the SensorFlash. Material, pressure test, and factory conformance certificates are optional at ordering.

Note

EAC declaration

The EAC declaration is available on the SensorFlash SD card delivered with the device.

Index

C

Cable specifications, 49, 117
Certificates, 13
Certificates and approvals, 127
Characteristics
  Density calibration, 176
  Massflow calibration, 176
  Sensor, 176
  Volumeflow calibration, 176
Commissioning
  Steps, 63
Communication
  Modbus, 175
Communication parameters
  Setup, 65
Coriolis
  Applications, 25
  Measurement principle, 26
Correct usage, (See improper device modifications)
Cross talk, 38, 108
Customer Support Hotline, 183

D

Design, 23
Design, sensor, 116
Designated use, 115
Device
  Identification, 53, 54, 55, 57
Diagnose
  with SIMATIC PDM, 109
Dimensions
  Remote versions, 136
Document history, 7
Documentation
  Edition, 7

E

Electrical connection
  Cable specifications, 49
  In hazardous area, 52
Empty tube monitoring, 84
Exception codes, 144

F

Flow direction, 33

H

Handling, 37
Hazardous area
  Electrical connection, 52
  Laws and directives, 14
Hazardous locations
  Approvals, 16
Hot swapable, 102
Hotline, 183

I

Icons, 103
Identification
  Sensor, 166
Identification nameplate
  Sensor, 55, 57
  Transmitter, 53
Improper device modifications, 13
Installation
  Drop line, 36
  Gas, 33, 35
  Incorrect, 107
  Inlet / Outlet conditions, 32
  Liquid, 33, 34
  Location in the system, 32
  Mounting of sensor, 37
  Orienting the sensor, 34
  Upstream / Downstream, 32
Internet
  Contact person, 183
  Modbus Organisation, 23
  Support, 183

L

Low flow cut-off, 83, 107
Low Mass Flow Cut-Off, 84
Low Volume Flow Cut-Off, 84

M

Maintenance, 93, 97
Maintenance and Diagnostics
  Access level, 171, 181
  Aerated flow, 172
  Device diagnostics, 172
  Maintenance, 171
  Zero point adjustment, 173
Modbus
  Features, 22
  Frame, 22
  Network, 65
  Organisation Website, 23
  Technical data, 114
  Technology, 22
Modbus holding registers
  Alarms, 179
  Characteristics, 176
  Communication, 175
  Identification, 166
  Maintenance & Diagnostics, 171, 181
  Process values, 160
  Setup, 167
  Simulation, 177
  Totalizer, 169
Mounting, (See Installation)

P

PDM
  Commissioning steps, 63
  Zero point adjustment, 77
Performance, 111
Power supply, 111, 117
Process noise damping, 85
Process values, 81, 160
Process variables, 119

Q

QR code label, 183
Qualified personnel, 15

R

Rated operating conditions, 118
Recalibration, 95
Reference conditions, 111
Repair, 97

S

Scope of delivery, 11
Sensor orientation, (See Installation)
SensorFlash, 129
Service, 97, 183
Service information, 98
Setup
  Density, 168
  Massflow, 168
  Operating conditions, 167
  Volume flow, 168
Signal processing, 27
Simulation, 88, 177
Specification nameplate
  Transmitter, 54
Support, 183
Symbol, 103
  Configuration, 103
  Device, 103
  Diagnostics, 103
  Maintenance, 103
  Operating mode, 103
  Process value, 103
Symbols, (Refer to warning symbols)
System design, 115
System integration, 21

T

Technical data, 111, 115, 129
Termination DIP switches, 51
Test certificates, 13
Totalizer, 169

U

Unicast communication mode, 22
Units for Process values and totalizer, 162

V

Vibrations, 37, 108

W

Warning symbols, 13

Z

Zero point adjustment, 77, 82
Automatic, 82
via PDM, 77