PD6830X
ProtEX Super Snooper

Dual-Line 5-Digit Explosion-Proof Modbus® Scanners

ProtEX-MS2

ProtEX-MFI

ProtEX™

FM APPROVED

SafeTouch® Through-Glass Button Programming

Super Snooper

MODBUS SCANNER

- Modbus® Master, Slave, or Snooper Mode
- Scan up to 16 Modbus Process Variables
- 5-Digit Decimal or Feet & Inches Level Display
- 7 Alphanumeric Character 0.4" (10.2 mm) Lower Display for Process Variables, Custom Units, and Tags
- Independent Scaling, Tag, and Unit for Each PV
- On-Board Three-Wire RS-485 with Modbus
- Explosion-Proof, IP68, NEMA 4X Enclosure
- SafeTouch® Through-Glass Button Programming
- Two Isolated Pulse Outputs Standard, Up to 5 kHz
- Isolated 4-20 mA Output Option
- Pulse Input for Rate, Total, and Grand Total
- 13-Digit Totalizer with Total Overflow Feature
- Automatic Rate, Total, and Grand Total Unit Conversions
- Password Protection
- Backlight Standard on All Models
- Operates from -40 to 75°C
- Data Logging Functions and Modbus Accessible Data

90° Rotatable Display

PRECISION DIGITAL CORPORATION

PRECISION DIGITAL

www.predig.com

PD6830X ProtEX Explosion-Proof Modbus Scanner

PD6830X Modbus Scanner

Easily Connects to Existing Modbus Networks

Explosion-Proof Die-Cast Aluminum NEMA 4X Enclosure

Three ¾" NPT Conduit Holes

SafeTouch Menu Button

0.7" (17.8 mm) 5-Digit

0.4" (10.2 mm) 7-Character (Alphanumeric)

Engineering Units, Total, Rate, & More

SafeTouch Prev or Right Arrow

Mounting Flanges (Up to 2½" Pipe)

SafeTouch® Enter, Scan or Acknowledge Button

Rate/Total/Process Variable

Backlight Standard

Total/Grand Total, Battery, and Sleep Mode Icons

Alarm Indicator

Password Protection

SafeTouch Next or Up Arrow

Mechanical Buttons (4 Places)

¾" NPT Flowmeter Connection

Through-Glass Button Programming

Scanner Displays

Modbus Variable with Tag

Modbus Variable with Unit

Dual Modbus Variables

Level Display Model (-L)

Feet & Inches LCD

OVERVIEW

The explosion-proof ProtEX-MS2 and ProtEX-MFI Super Snoopers are serial input RS-485 Modbus® RTU scanners. These Modbus devices are ideal for hazardous areas or safe areas in need of a rugged solution. The ProtEX-MS2 has a two-line decimal display. The ProtEX-MFI top line displays level in feet and inches up to 399 ft, 11 and 15/16 inches. It includes a 20-segment tank level indicator.

Each can accept up to 16 Modbus process variables (PVs), from up to 16 devices. The scanners automatically cycle through the PVs, with the ability to manually cycle PVs or pause scanning.

A flow meter pulse input for rate, total, and grand total is standard. The total and grand total can display up to 13 digits with the total overflow feature.

Up to four math channels (CV1-CV4) may be used to perform math functions on any of the input variables. Math functions include sum, difference, weighted average, ratio and more. Nested math functions may be used in these math equations, allowing for complex math formulas.

The display is programmable to show any input, math channel, units, or tags, on a variety of display combinations between the top and bottom displays.

Standard features include SafeTouch® through-glass buttons for operating the scanner without removing the cover, a backlight that makes the display mode visible in any lighting condition, 512 points of input data logging, and two open collector pulse or alarm outputs. A 4-20 mA output is available as an option.

The enclosure is provided with three threaded conduit holes and integrated pipe or wall mounting flanges. One conduit plug is installed, and included in the explosion-proof approvals.

KEY FEATURES

The ProtEX Super Snooper can be programmed as a Modbus RTU Master, Slave, or Snooper. Its Modbus communications capabilities and math functions make it unique, while still maintaining the great quality and worldwide hazardous area approvals of the ProtEX family.

The PD6830X has isolated half-duplex RS-485 serial communications with a three position header for 3-wire (communications and ground) communication.

Informative & Easy to Read Display

The high contrast, backlit LCD is easy to read from far away and under various lighting conditions. The upper display is 0.7" high and shows up to 5 digits. The lower display is 0.4" high and shows 7 alphanumeric characters ideal for dual PV display or as units and tags for the top display.

Modbus RTU Serial Communications

As a Master, the scanner reads up to 16 slave devices, scales the data from each, and indicates each on an alternating display. The scanner in Master Mode is capable of polling up to 16 process variables (PVs). It shows each PV (PV1-PV16) alternately on the top and/or bottom display.

In Snooper Mode, the scanner is able to read up to 16 variables being polled by the master by listening to the bus traffic. It picks up specific registers being polled by a master device from a specific slave device and processes the data being read. No other device on the Modbus network needs to be reprogrammed for the Snooper Mode scanner to display data polled by the Modbus master.

As a Slave, the scanner is controlled by a master device. The data sent to it by the master is scaled, displayed, and used to operate the open collector and 4-20 mA outputs.

Modbus Application Capabilities

The PD6830X scanners can communicate with any Modbus device using the ever-popular Modbus communications protocol. Take advantage of the Modbus capabilities in the level and flow transmitters you already have by using Master Mode to read more data, more accurately. Possible applications include:

- Use Master Mode to scan the top level, interface level, and temperature from Modbus multivariable level transmitters.
- Use Master Mode to display the flow rate, tag, and units, for multiple Modbus-enabled flow meters.
- Use Snooper Mode to add a tank side indicator at eye-level for a Modbus level transmitter being polled by a master in the control room.
- Use Snooper Mode to add additional remote displays to a network with a Modbus scanner acting as the master, and display the data at all operator locations.
- Use Slave Mode to display data sent to the scanner by a Modbus master in the control room.

These are just a few capabilities of using the PD6830X Modbus Scanners in a Modbus process network.

Powerful Math Functions

The PD6830X includes a variety of math functions. Each of the four Math Channels (C1-C4) may be assigned a math function. The Math Channels may then be displayed, used to control outputs, or included in the data log, just as the Modbus PVs.

Math Function	Calculation	Setting
Addition	PAR1 + PAR2	SUM
Difference	PAR1 - PAR2	DIF
Multiplication	PAR1 * PAR2	MULTI
Division	PAR1 / PAR2	DIVIDE
Absolute diff.	Abs(PAR1 - PAR2)	DIFABS
Weighted avg.	((PAR1 – PAR2)*PAR3) +PAR2	WAVG
Draw	((PAR1 / PAR2) – 1) * PAR3	DRAW
Ratio	(PAR1 / PAR2) * PAR3	RATIO
Concentration	PAR1 / (PAR1 + PAR2) * PAR3	CONCEN
Constant	Constant value of 0.0001 to 99999	CONST
None	Disable	NONE
Absolute Value	Abs(PAR1)	ABS
Square Root	√(PAR1)	SQRT

The Math Channels are configured by selecting a parameter (PAR) for each math function. For complex math needs, a nested math function may be selected for the parameter.

Parameter Name	Definition	Setting
Modbus PV1	The scaled PV1 value; PV2 to PV16 also selectable	PV 1
Math Channel CV1	The math channel CV1 value; CV2 to CV4 also selectable	CV 1
Rate	The pulse rate display rate value	RATE
Total	The total display value	TOTAL
Grand Total	The grand total display value	Gr TOTAL
Nested Math/Value	Any above math function or value	

Modbus Scanner Example 1: Master Tank Level Indicator

The following example shows just one possible use for the PD6830X. The PD6830X is setup for Master mode, and is polling the Modbus transmitters.

In this application we have a system consisting of (4) MTS M-Series multivariable tank level gauges connected to a PD6830-AX0-I-L displaying product level and interface level in feet and inches, and average temperature in °F. The tank level indicator displays the level and interface for each tank as the PVs are scanned.

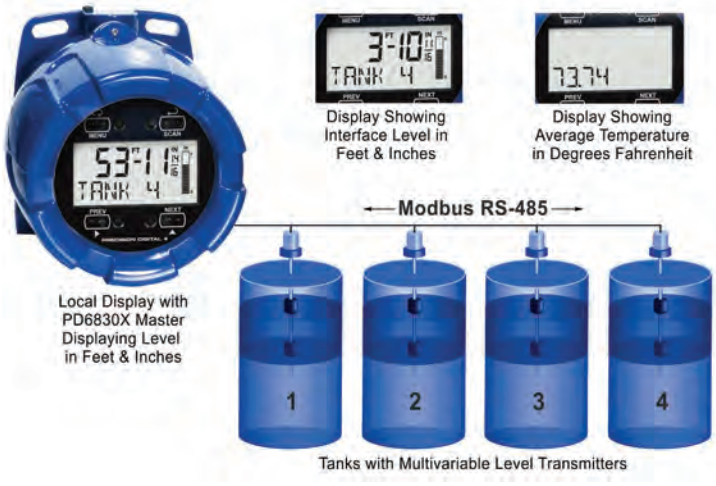

For a two line decimal display showing units of inches, feet, or meters, a PD6830-AX0-I-2 could be considered for this application.

Modbus Scanner Example 2: Snooper Flowmeter Display

In this application, a system consisting of (2) Modbus enabled flowmeters are connected to a SCADA system operated out of a control room. A Modbus PLC polls the data out of the flowmeters. A PD6830-AX0-I-2 has been added to the system as a Modbus Snooper, to provide the operators an easy to read field display near the flow lines.

The scanner displays one flow rate on the top display, and one on the bottom display. Each has an alternating tag and unit for clear identification.

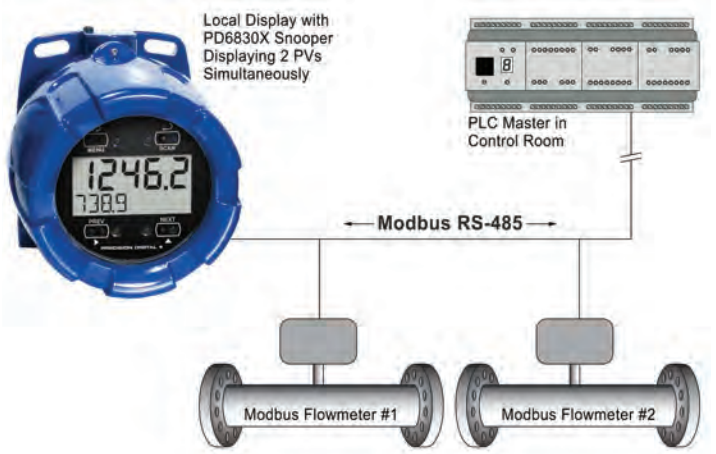

SafeTouch® Through-Glass Buttons

The PD6830X is equipped with four sensors that operate as through-glass buttons so that it can be programmed and operated without removing the cover (and exposing the electronics) in a hazardous area. These buttons can be disabled for security by selecting the OFF setting on the THRU-GLASS BUTTONS switch located on the back of the electronics module, inside the enclosure.

To actuate a button, press one finger to the glass directly over the marked button area. When the cover is removed, four mechanical buttons located next to the sensors are used.

To save power, and prevent unintended triggers, SafeTouch buttons enter a power saving mode after three minutes of inactivity. This mode is indicated by a pause symbol (⏻). To enable the SafeTouch buttons, press the MENU button for up to five seconds. The display will read AWAKE, and the SafeTouch buttons will be fully enabled.

Wide Viewing Angle

Operators can't always look at the display from straight on, so the window and display module have been optimized to provide a wide viewing angle of approximately +/- 40°; nearly twice that of the competition! Remember, the PD6830X is designed to be seen.

Modern, Sleek and Practical Enclosure

The first thing operators notice about a product is its enclosure and the PD6830X really shines here. The copper-free (0.30%), smooth, die-cast aluminum NEMA 4X (IP68) enclosure is finished with a corrosion resistant epoxy coating that literally does make the PD6830X shine. The built-in mounting flanges make for convenient wall or pipe mounting and there is even a slot on the back of the enclosure for centering on the pipe. There are two ¾" NPT conduit holes for wiring and one ¾" NPT hole for a flowmeter connection.

Customizable Menu Structure

The top-level programming menus are fully customizable. The menus available by default when pressing the MENU button are Setup and Advanced. These menus may be removed, or additional parameters added, to customize the programming menu for easier operation and enhanced programming security.

PULSE INPUT RATE/TOTALIZER

The ProtEX PD6830X Super Snoopers include a pulse input for use with pulse output flowmeters. This allows a pulse flowmeter to be seamlessly added to the same display that shows Modbus transmitter information. Rate, total, and grand total may be displayed for the pulse input flowmeter in addition to the 16 Modbus process variables.

Wide Input Signal Selection

The PD6830X is designed to handle a wide variety of inputs, including: pulse, open collector, NPN, PNP, TTL, or switch contact up to a 64 kHz rate. It can readily discern inputs with pulse widths as small as 5 µs. Inputs are conveniently set up on the display module by simply moving a switch to the desired option. The voltage input offers up to 500 V of isolation.

Display Rate, Total, or Grand Total

The upper display shows the flow rate or 5-digit total or grand total. The bottom display can display 5-digit rate, 13-digit total or grand total, or a 7-character alphanumeric unit or tag. The scanner can display the pulse input rate, total, and grand total in addition to Modbus PVs and math channels. The overflow feature allows for 13 digits of total or grand total on the lower display by toggling between the 6 most significant digits, and the 7 least significant digits.

Total & Grand Total Reset

The total and grand total may be reset via an external contact closure (total only), or automatically via user-selectable preset value and time delay (1–99,999 sec). Manual reset may be disabled or protected by a password. Total and grand total are reset independently.

Non-Resettable Grand Total Mode

The grand total may be configured to be a non-resettable grand total. *This is a permanent setting*. Configuring the grand total as a non-resettable grand total locks out all setup parameters that could be used to reset or change the setup of the grand total; including input selection, rate scaling, and conversion factors.

Automatic K-Factor Unit Conversions

Most flowmeter manufacturers provide k-factor and k-factor units for the device. Enter the defined k-factor and units (i.e. pulses/gal), and the meter can automatically convert the rate, total, and grand total displays to any of 12 predefined units shown below (with four different rate time base selections and four different total multipliers). This allows you to display the units you want without the need to do math or enter additional conversion factors! Custom units can be entered which require a user defined conversion factor.

Unit	Description	Unit	Description
GAL	Gallons	cuYD	Cubic yards
L	Liters	cuFt	Cubic feet
IGAL	Imperial gallons	cuIn	Cubic Inches
M3	Meters cubed	LIBBL	Liquid Barrels
BBL	Barrels	BBBL	Beer barrels
BUSH	Bushels	HECLL	Hectoliter

The rate time base is selectable in seconds, minutes, hours, or days.

The total and grand total may have a x1, x100 (h), x1000 (K), or x1,000,000 (M) multiplier to prevent rollover. For example, a total unit of gallons, and a multiple of x1,000,000 (1x10^6) will display total in mega-gallons (MGAL). Totals are automatically recalculated when changing between predefined units.

Gate Function for Slow or Unsteady Pulses

The gate function allows for a rate display of slow or unsteady pulse rates. Using the programmable gate, the meter is able to display pulse rates as slow as 1 pulse every 9,999 seconds (0.0001 Hz). The gate function can also be used to obtain a steady display reading with a fluctuating input signal. There are two settings for the Gate, low gate and high gate.

Multi-Point Linearization

Up to 32 linearization points can be selected under the Scale function. The multi-point linearization can be used to linearize the display for non-linear signals such as non-linear flows, and for end-point correction on flow meters. These points are established via direct entry (SCALE) or with an external calibration signal (CAL).

ADDITIONAL FEATURES

4-20 mA Retransmission

Use the analog output to retransmit a Modbus PV, math channel value, or the pulse input signal in the commonly used 4-20 mA form. This feature is available on the PD6830-AXA-I-2 and PD6830-AXA-I-L models.

The 4-20 mA output can be scaled to represent all, or part, of the actual display span.

Open Collector Outputs

The PD6830X comes standard with two open collector outputs. Open collector pulse outputs (Out 1 and Out 2) are individually programmable for a Modbus PV, math channel, pulse input rate, total, or grand total alarms; rate, total, or grand total pulse outputs; retransmitting of pulse inputs; quadrature paired output; or constant timed pulse output.

Save Backup & Backup Restore

The backup restore feature is used to save and restore programmed settings. This is useful to restore scanners whose programming has been altered in unknown ways, or to quickly restore known good settings if mistakes are made during reprogramming. The load feature will not affect the current password settings, or allow the editing of permanently locked parameters due to the enabling of the non-resettable grand total feature.

Settings Password Protection

A 5-digit password prevents unauthorized changes to the programmed parameter settings. The lock symbol is displayed on decimal display models to show that settings are protected. If the scanner is password protected, the scanner will display the message LOCKED (LOCKED) when the MENU button is pressed.

INSTALLATION

Easy Wiring & Service

Field wiring is made to easily accessible screw terminal blocks at the base of the enclosure and there is plenty of room inside the enclosure to do the wiring. The terminal blocks are clearly marked to ensure proper wiring. The scanner module connects to a detachable ribbon cable so that it can be easily removed for service, while keeping all the field wiring intact.

Installation Flexibility

The PD6830X's rotatable display, along with three available conduit connections, provide for numerous installation options. The display can be rotated in 90° increments. Rotate it 90° for horizontal mounting. Wiring can be routed to the most convenient conduit connection(s). One metal conduit plug is supplied per unit. Additional plugs are available (PDAPLUG75) if needed.

DATA LOGGING

The PD6830X is capable of data logging up to 512 records, each containing date, time, and log number as well as rate, total, grand total or all enabled Modbus PVs and Math Channel CVs. This allows a total of 256 records of all enabled PVs and CVs and 256 records of rate, total, and grand total; or 512 records of only the enabled Modbus PVs and CVs if the pulse inputs are disabled.

Real Time Logging

A real time clock records the date and time for each data log entry. The data may be recorded using the Log Time feature up to 4 times per day at a specific times entered by the user. When the log is full, it will roll over and continue to log, deleting the oldest data. The data may also be recorded using the Log Interval feature, recording the data every programmed time interval, from 1 minute to 24 hours. When the Interval log is full, recording will stop, keeping all data until logging is started again.

On-Screen Access

The data log entries are viewable on the scanner LCD. Data points may be navigated by viewing the log number, date and time. A known log may be jumped to immediately, avoiding a lengthy search for data. With through-glass buttons and a customizable menu, the data log can be accessed quickly and without the need for external control stations or serial communications, for easy viewing in the field.

CONNECTIONS

To access the wiring connections, remove the enclosure cover and unscrew the two captive screws that fasten the display module. Disconnect the ribbon cable and remove the display module. Power and signal connections are made to terminal blocks at the base of the enclosure. Grounding connections are made to the two ground screws provided on the base – one internal and one external.

Code	Description
D+	RS-485 data B (non-inverting)
D-	RS-485 data A (inverting)
G	RS-485 shield ground
P+	DC power positive terminal
COM	DC power return/negative, reset contact closure common
RST	Contact closure reset pull-up to 1.8 VDC
S+	Pulse input signal input positive terminal
S-	Pulse input signal input negative terminal
OC1+	Open collector output 1 positive terminal
OC1-	Open collector output 1 negative terminal
OC2+	Open collector output 2 positive terminal
OC2-	Open collector output 2 negative terminal
LP+	4-20 mA transmitter DC power positive terminal
LP-	4-20 mA transmitter regulated current output terminal

DIMENSIONS

Units: Inch (mm)

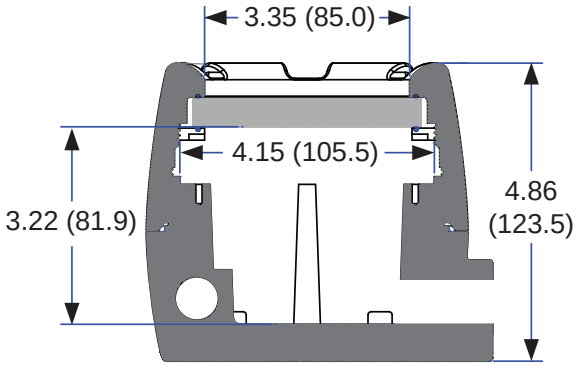

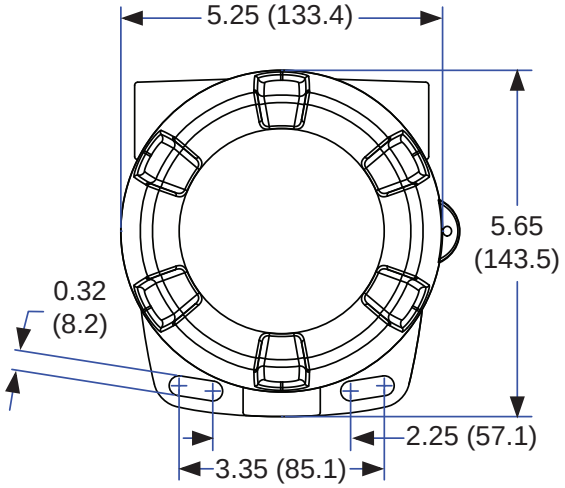

SPECIFICATIONS

Except where noted all specifications apply to operation at +25°C.

General

Decimal Display: Top Display: Five Digits (0 to 99999), 0.7" (17.8 mm) high, 7-segment, automatic lead zero blanking.
Bottom Display: Seven Characters, 0.4" (10.2 mm) high, 14-segment, automatic lead zero blanking.
Symbols: Total, grand total, high alarm, low alarm, SafeTouch button sleep mode/disable, password lock.
Feet & Inches Display: Top Display: 0.60" (15.2 mm) high, 0 to 399FT, $11^{15}/_{16}$ IN, 7-segment, programmable 1/16 or 1/8 fraction display.
Bottom Display: Seven Characters, 0.4" (10.2 mm) high, 14-segment, 7-digits.
Tank Level Indicator: 20-segments, F (Full) and E (Empty).
Alarm Indication: High and low alarm. Backlight: White
Display Assignment: Top and Bottom Display*: Process Variables (PV); Alternating PV and Units, Tag and PV, or Tag, PV, and Units; Pulse Input Rate, Total, or Grand Total with Alternating Tag.
Bottom Display: All Top Display Options or Off
Units and tag independent for each PV, pulse input rate, total, and grand total.
**Note: On feet and inches display models, top display used only for level Modbus process variables or math channels.*
Backlight: Backlight deactivated below temperatures ≈ -20°C
Alarm Indication: Flashing display plus HI/LO (alarm) or SET indicators
Scan and Update Rate: Ambient > -20°C: Modbus PV scan rate programmable from 2 to 99 seconds per PV. Tag and units programmable for 1 to 5 second alternation. Pulse input variables update 1/second. Rate update is dependent on gate settings.
Ambient < -20°C: All Modbus scan, alternating units and tags, and pulse input variables update/10 seconds minimum.
Underrange: Upper Display: Decimal display flashes -9999
Level display flashes to 399FT 11 15/ 16 IN
Lower Display: Flashes -999999
Overrange: Upper Display: Decimal display flashes 99999
Level display flashes to 399FT 11 15/ 16 IN
Lower Display: Flashes 9999999
Programming Methods: Four SafeTouch® through-glass buttons when cover is installed. Four internal pushbuttons when cover is removed.
Password Menu Options: Three programmable password selections can be used for the following: restrict modification of settings, prevent resetting the total or grand total without the password, or permanently lock out the ability to change or reset the grand total or any grand total related settings (making a non-resettable grand total).
Pass: Restricts modifications of programmed settings to require re-entering the password to make changes.
Pass T: Restricts the reset of total to require re-entering the password. Disables the manual mode reset contact.
Pass GT: Restricts the reset of grand total to Require re-entering the password. May enable a non-resettable grand total and permanent lockout of grand total-related settings with a specific password.
Input Power: 9-30 VDC, 38 mA max. 2.2 W
Data Logging: Up to 512 records, recorded 4/day at specific times or at defined time intervals. Record contains first eight enabled Modbus PVs; C1-4 if enabled; date; time; pulse rate, total, and grand total with units; and log number.
Isolation: All Models: 500 V opto-isolated pulse input-to-power/OC output with isolated input enabled, 500 V input/power-to-RS-485 serial communications. **AXA Models:** 500 V input/power-to-analog output.
Environmental: Operating temperature range: -40 to 75°C; Storage temperature range: -40 to 75°C; Backlight deactivated below temperatures ≈ -20°C; Relative humidity: 0 to 90% non-condensing.
Non-Volatile Memory: All programmed settings and total reading are stored in non-volatile memory for a minimum of ten years if power is lost.
Connections: Screw terminals accept 12 to 22 AWG wire
Enclosure: Explosion-proof die-cast aluminum with glass window, corrosion resistant epoxy coating, color: blue. NEMA 4X, 7, & 9, IP68. Copper-free (0.3%).
Mounting: May be mounted directly to conduit. Two slotted flanges for wall mounting or NPS 1½" to 2½" or DN 40 to 65 mm pipe mounting.
Display Orientation: Display may be mounted at 90° increments up to 270° from default orientation.
Overall Dimensions: 5.67" x 5.24" x 4.88" (144 mm x 133 mm x 124 mm) (W x H x D)
Weight: 5.00 lbs (80 oz, 2.27 kg)
Warranty: 3 years parts and labor

Modbus Operating Modes

Master: Processes and displays data read from Modbus RTU slave devices. Up to 16 process variables (PVs) from up to 16 slave devices. Each PV programmed individually.
Slave: Processes data sent to it from a Modbus RTU master device.
Note: Refer to Modbus Register Tables at www.predig.com for details.
Snooper: Listens to the Modbus traffic and picks up a specific register or registers being polled by a Master device from a specific slave device and processes the data being read. Up to 16 process variables (PVs) from up to 16 devices. If multiple registers are polled by the master with one command, only the first returned value will be read.
Master Poll Time: 0.1 to 99.9 sec. Time between read-commands.
Master Timeout: 0.1 to 99.9 seconds. Time elapsed after a poll request is made before the scanner considers that request to have failed.
Number of Retries: 1-99. The number of retries the scanner will make when requesting data before reporting an error condition on the PV.
Snooper Response Time: 0.1 to 99.9 seconds. Time since the last PV update the before being considered an error.
Slave Timeout: 0.0 to 99.9 seconds. Time elapsed after the last data received from a master before the scanner considers the data to be out of date. Programming 0 disables the timeout, and PV data will be displayed indefinitely despite not being updated regularly.

Modbus Scanner Process Variables

PV Inputs: Up to 16 independently programmed Modbus process variables (PVs) may be scanned (Master mode) or detected (Snooper mode). Each of the 16 Modbus PVs may be enabled or disabled.
Slave ID: Specifies which device on the bus to monitor. Valid for Master and Snooper modes only.
Assign the slave ID or address (1-247) of each of the devices containing the process variables to be displayed (Slave ID for PV1-16).
Register Number: Specifies which register(s) to read in the devices on the bus.
5 Digit Function 03: 40001–49999; 04: 30001–39999; or 65: 1–9999.
6 Digit Function 03: 400001–465535 or 04: 300001–365535;
or 65: 1–65535.
Range is dependent on Function Code selection (03, 04, or 65)
Will read 2 registers for Long integer and Floating point data types; the register entered and the next consecutive register number.
Valid for Master and Snooper modes only.
Function Code: 03, 04, and 65 (used to read 32 bit registers). Master & Snooper modes only.
Data Type: Select the data format of the PVs. Select between short integer (2 byte), long integer (4 byte), or floating point (4 byte). Slave mode uses floating point only.
Byte Order: Integer data programmable as binary or BCD, and signed or unsigned. Byte order selectable as big-endian (1234), little-endian (4321), byte swap big-endian (2143), or byte swap little-endian (3412). Byte swap unavailable for short.

Math Channels

Math Result Channels: Four math channels CV1-CV4. Each math channel may be programmed for a math function.
Math Functions: Parameter 1 (PAR1), parameter 2 (PAR2), and parameter 3 (PAR3) independently programmable for each math channel C1-C4.

Math Function	Function	Setting
Addition	PAR1 + PAR2	SUM
Difference	PAR1 - PAR2	DIF
Multiplication	PAR1 * PAR2	MULTI
Division	PAR1 / PAR2	DIVIDE
Absolute diff.	Abs(PAR1 - PAR2)	DIFABS
Weighted avg.	((PAR1 – PAR2)*PAR3) +PAR2	WAVG
Draw	((PAR1 / PAR2) – 1) * PAR3	DRAW
Ratio	(PAR1 / PAR2) * PAR3	RATIO
Concentration	PAR1 / (PAR1 + PAR2) * PAR3	CONCEN
Constant	Constant	CONST
Long Integer	Constant	LONG
Floating Pt.	Constant	FLOAT
None	Disable	NONE
Absolute Value	Abs(PAR1)	ABS
Square Root	√(PAR1)	SQrt

Serial Communications

Protocol: 3-Wire RS-485 Modbus® RTU
Scanner ID: 1 – 247. Specifies the address of the PD6830X.
Baud Rate: 1,200; 4,800; 9,600; 19,200; 38,400; 57,600; or 115,200 bps
Transmit Time Delay: Programmable between 0 and 199 ms
Parity/Stop Bit: Even, odd, none with 1 stop bit, or none with 2 stop bits
Byte-to-Byte Timeout: Max of 1.5 character times or 750 µs

Pulse Input

Pulse/Transistor/Contact Closure Input: Field selectable; Sourcing or sinking pulse or square wave; 0-5 V, 0-12 V, or 0-24 V; TTL; NPN or PNP transistor; Open collector 100 kΩ pull-up to 3 V; Switch contact 100 kΩ pull-up to 3 V; PNP transistor 100 kΩ pull-down to ground (COM); Active input 100 kΩ to battery level, 10 kΩ to power.
Maximum Frequency: 64 kHz; Minimum Pulse Width: 5 µs;

Threshold Setting	Low (V)	High (V)
Normal	1.2	2.0
Low	0.2	1.2

Opto-Isolated Input: Sourcing pulse or square wave 0-5 V, 0-12 V, or 0-24 V; Logic High: 2-24 V, Logic Low: < 1 V; Maximum Frequency: 20 kHz; Minimum Pulse Width: 20 µs; Input Current: 1 mA @ 5 V, 2.5 mA @ 12 V, 5 mA @ 24 V.
Low Voltage Mag Pickup Input: Sensitivity: 20 mVp-p to 24 Vp-p; Maximum Frequency: 6 kHz
Minimum Input Frequency: 0.0001 Hz. Minimum frequency is dependent on high gate setting (rate display).
Input Impedance: Pulse input: Greater than 75 kΩ @ 1 kHz.
Open collector/switch input: 100 kΩ pull-up to 3 V.
Accuracy: ±0.03% of calibrated span ±1 count
Pulse Input Recalibration: All ranges are calibrated at the factory to read frequency in Hz. No recalibration required.
Temperature Drift: Rate display is not affected by changes in temperature.
Low-Flow Cutoff: 0-99,999 (0 disables cutoff function)
Decimal Point: Up to four decimal places or none:
4.4444 33.333 222.22 1111.1 or 00000
Calibration: May be calibrated using K-Factor, scale without signal source, or by applying an external calibration signal.
K-Factor: Field programmable K-Factor converts input pulses to rate in engineering units. May be programmed from 0.000001 to 9,999,999 pulses/unit.
Calibration Range: Input 1 signal must be ≥ 1 Hz; input 2 signal may be set anywhere above input 1 setting. Minimum input span is 1 Hz. An Error message will appear if the input 1 and input 2 signals are too close together.
Input Contact Debounce Filter: Programmable contact debounce filter. Input signal frequency speed selections of Hi (no filter), Med (250 Hz max input, 2 ms pulse width), and Low (100 Hz max input, 5 ms minimum pulse width).
Time Base: Second, minute, hour, or day
Gate: Low gate: 1-99 seconds; High gate: 2-9,999 seconds

Pulse Rate/Totalizer

Display Assignment: The top display may be assigned to rate, total, or grand total, in addition to Modbus process variables.
Rate Display Units: Gallons, liters, imperial gallons, cubic meters, barrels, bushels, cubic yards, cubic feet, cubic inches, liquid barrels, beer barrels, hectoliters, or custom.
Rate Display Time Base: Rate display may be calculated in terms of units per second, minute, hour, or day.
Total/Grand Total Display Units: Gallons, liters, imperial gallons, cubic meters, barrels, bushels, cubic yards, cubic feet, cubic inches, liquid barrels, beer barrels, hectoliters, or custom. Setting is independent for each.
Total/Grand Total Display Unit Multiplier: x1, x100 (h), x1000 (k), or x1,000,000 (M) multiplier (and prefix) applied to total or grand total display units. Setting is independent for each.
Total/Grand Total Decimal Points: Up to six decimal places or none: 6.666666, 55.55555, 444.4444, 3333.333, 22222.22, 111111.1 or 0000000
Total and grand total decimal points are independently programmed, and are independent of rate decimal point.
Totalizers: Calculates total and grand total based on rate and field programmable multiplier to display total in engineering units. Time base must be selected according to the time units in which the rate is displayed. The total and grand total utilize the same time base, with different conversion factors and resets.

Totalizer Reset: Via SafeTouch® RESET button, mechanical button (cover off), external contact closure (total only), automatically via user selectable preset value and time delay (1 – 99,999 sec). Manual reset may be disabled or protected by password for the total and grand total. Total and grand total reset independently.
Total Overflow & Rollover: The total can display up to 9,999,999,999,999. Up to 9,999,999 can be displayed on the lower display normally.
An overflow display will toggle between the first six digits and last seven digits (999999 <> 9999999) for a 13-digit total. The total will rollover beyond thirteen digits. The T indicator on the display will flash to indicate total overflow, and the six most significant digits (first six numbers of the total) are indicated with the flashing overflow symbol -(.
Grand Total Overflow & Rollover: The grand total can display up to 9,999,999,999,999. Up to 9,999,999 can be displayed on the lower display normally. An overflow display will toggle between the first six digits and last seven digits (999999 <> 9999999) for a 13-digit total. The grand total will rollover beyond thirteen digits. The GT indicator on the display will flash to indicate grand total overflow, and the six most significant digits (first six numbers of the grand total) are indicated with the flashing overflow symbol -(.
External Total Reset: External total reset connections are made between RST and COM. Logic High: 1.4 V, 3.3V max; Logic Low: < 0.8 V. 90 ms minimum pulse width.

4-20 mA Transmitter Output

Output Source: Modbus PV 1-16, math channel 1-4, rate/process, total, grand total, or disabled.
Scaling Range: 4.000 to 20.000 mA for any display range.
Disable: If disabled, the output will output 3.2 mA.
Calibration: Factory Calibrated: 0.0 to 1000.0 = 4-20 mA output
Underrange: Output Underrange: 3.8 mA
Overrange: Display Overrange: 20.5 mA. Output Overrange: 20.5 mA
Accuracy: ± 0.05% span ± 0.004 mA
Temperature Drift: 0.08 µA/°C max from -40 to 75°C ambient
External Loop Power Supply: 30 VDC maximum
Output Loop Resistance:

Power supply	Minimum	Maximum
24 VDC	10 Ω	750 Ω
30 VDC	100 Ω	1100 Ω

Note: loop-powered backlight subtracts 150 Ω from maximum resistance figures above.

Open Collector Outputs

Output Assignment: Two open collector pulse outputs Out 1 and Out 2. Individually programmable for Modbus PV, math channel, pulse rate, total, or grand total alarms; Modbus PV, math channel, pulse rate, total, or grand total pulse outputs; or retransmitting of pulse inputs; constant timed pulse output; quadrature outputs (requires Out 1 and Out 2); or off.
Rating: Isolated open collector, off: 24 VDC max, on: <1 V @ 150 mA max
Alarm Output: Assign to Modbus PV 1-16, math channel 1-4, or rate for high or low alarm trip point. Assign to total or grand total for total or grand total alarms.
Alarm Deadband: 0-100% FS, user selectable
Alarm Acknowledge: Front panel SCAN/ENTER button resets output and screen indication.
Pulse Output Count: The pulse output count (COUNT) is programmable from 0.000001 to 9999999. PV and math channels generate a frequency equal to the PV or math value divided by the Count value. Rate pulses are generated at a rate of one output pulse per Count value. Total and grand total pulses are generated for every total or grand total increment selected (e.g. Count value of 100 will generate one pulse every time the total is incremented by 100 units).
Pulse rate retransmission outputs one to one for input pulses, up to maximum output speed. Count is not used for retransmitting outputs.
Pulse Output Pulse Width: Unless otherwise stated, pulses are 50% duty cycle for required frequency.
A pulse rate retransmit output will generate 100 to 130 µs pulses at the falling edge of every input pulse.

Disclaimer

The information contained in this document is subject to change without notice. Precision Digital Corporation makes no representations or warranties with respect to the contents hereof, and specifically disclaims any implied warranties of merchantability or fitness for a particular purpose.

©2014 Precision Digital Corporation. All rights reserved.

Pulse Output Maximum Frequency: 5 kHz, pulse width at 50% duty cycle. If the outputs exceed 5 kHz, the scanner will display PUL SE OVERRNG
Quadrature Output: Output set to quadrature will lag the other pulse output by 90° (1/4 duty cycle) at output frequency. Minimum 1 Hz
Timer Output: Programmable on and off time, repeating cycle. Minimum period 0.1 second, maximum 100,000 seconds. Minimum pulse time 0.01 second, maximum 10,000 seconds.

Product Ratings & Approvals

FM: Class I, Division 1, Groups B, C, D
Class II, Division 1, Groups E, F, G
Class III, Division 1; T6
Class I, Zone 1, AEx d IIC T6 Gb
Zone 21, AEx tb IIIC T85°C
Ta = -40°C to +75°C
Enclosure: Type 4X & IP66
Certificate number: 3040391
ATEX: II 2 GD
Ex d IIC T6 Gb
Ex tb IIIC T85°C Db IP68
Tamb -40°C to +75°C
ATEX Certificate: Sira 10ATEX1116X
IECEx: Ex d IIC T6 Gb
Ex tb IIIC T85°C Db IP68
Ta = -40°C to +85°C
IECEx Certificate: IECEx SIR 10.0056X
CSA: Class I, Division 1, Groups B, C, D
Class II, Division 1, Groups E, F, G
Class III, Division 1;
Ex d IIC T6
Enclosure Type 4X, IP66/68:
Ta = -40°C to +75°C
Certificate number: 2325749

ORDERING INFORMATION

ProtEX PD6830X • Explosion-Proof Modbus Scanner	
Model	**Description**
PD6830-AX0-I-2	Isolated 2-wire RS-485 with Modbus protocol.
PD6830-AXA-I-2	Isolated 4-20 output, and isolated 2-wire RS-485 with Modbus protocol.
PD6830-AX0-I-L	Feet and inches display and isolated 2-wire RS-485 with Modbus protocol.
PD6830-AXA-I-L	Feet and inches display, isolated 4-20 output, and isolated 2-wire RS-485 with Modbus protocol.
ProtEX PD6830X Accessories	
Model	**Description**
PDAPLUG75	¾" NPT Metal Conduit Plug
PDA6846	Pipe Mounting Kit for. Includes zinc-plated u-bolt for 2" pipe, (2) washers, and (2) nuts.
PDA6846-SS	Pipe Mounting Kit. Includes stainless steel u-bolt for 2" pipe, (2) washers, and (2) nuts.
PDA8068	USB Serial Adapter for PD6730/PD6830 Programming
PDA8485-I	USB to RS-422/485 Isolated Converter
PDA8485-N	USB to RS-422/485 Non-Isolated Converter

Your Local Distributor is:

PRECISION DIGITAL CORPORATION
89 October Hill Rd • Holliston MA 01746 USA • Tel (800) 343-1001 • Fax (508) 655-8990
www.predig.com