DATA SHEET

Type 2103

Pneumatically operated diaphragm valve with ELEMENT actuator

2/2 way diaphragm valve with pneumatic stainless steel actuator (Type ELEMENT) for dezentralised automation

- Valve housing and diaphragm available in various materials and designs
- Surfaces in contact with the product from Ra ≤ 0.38 µm…1.6 µm (optionally electropolished)
- Available in all common connection sizes and variants

Product variants described in the data sheet may differ from the product presentation and description.

Can be combined with

Type 2034
Multifunction block and weld solution

Type 8691
Control head for decentralised automation of ELEMENT process valves

Type 8695
Control head for decentralised automation of ELEMENT process valves

Type 8692
Digital electropneumatic Positioner for the integrated mounting on process control valves

Type 8696
Digital electropneumatic positioner for the integrated mounting on process control valves

Type 8098
FLOWave SAW flowmeter

Type description

The externally controlled diaphragm valve type 2103 consists of a pneumatically operated piston actuator, a diaphragm and a 2-way valve housing. The proven and robust actuator with stainless steel housing ensures use under hygienic or aggressive environmental conditions. The flow-efficient valve housing with little dead space enables high flow rates and a wide range of possible uses. The valve housing and the diaphragm are available in all common materials and designs. The actuator has a compact, autoclavable design with a large stainless steel shell and gap-free seals. The integration of automation units of the ELEMENT type is possible in all expansion stages (can be retrofitted) and can be fitted with an integrated fieldbus interface. An explosion-proof ATEX/IECEx device variant is available.

It is a compact, smooth-surfaced and highly integrated system consisting of a valve and an automation unit with integrated control air ducts (no intake of ambient air). The add-on housing is available either in plastic or stainless steel (rotatable 360°). The valve is protected in accordance with protection classes IP65/67 and NEMA Type 4X and has a high level of chemical resistance.

DTS 1000450597 EN Version: - Status: RL (released | freigegeben | validé) printed: 21.12.2020

© Christian Bürkert GmbH & Co. KG, Subject to alteration

Visit product website

Table of contents

1. General technical data 3

2. Approvals 4

3. Materials 5

3.1. Chemical Resistance Chart – Bürkert resistApp 5
3.2. Pressure temperature diagram for plastic body 5
3.3. Material specifications 6
3.4. Example of available membrane materials 6

4. Dimensions 7

4.1. Actuator 7
ELEMENT actuator 7
4.2. Forged body (VS) with welded connection 8
4.3. Forged body (VS) with clamp connection 10
4.4. Tube valve body (VP) with welded connection 11
4.5. Tube valve body (VP) with clamp connection 12
4.6. Tube valve body (VP) with threaded connection 13
4.7. Tube valve body (VP) with flange connection 14
Cast body (VG) with welded connection 15
4.8. Cast body (VG) with clamp connection 17
4.9. Plastic body (PV; PD; PP) with spigot connections 18
4.10. Plastic body (PV, PD, PP) with true union 19
4.11. Plastic body (PV, PD, PP) with flange connection 20

5. Performance specifications 21

5.1. Flow characteristics 21
Forged body (VS) 21
Tube valve body (VP) 21
Cast body (VG) 22
Plastic body (PV; PD; PP) 22
5.2. Medium pressure 22

6. Product accessories 23

7. Networking and combination with other Bürkert products 28

7.1. Possible combinations for ELEMENT control valve system Type 8802-DF with TopControl 28
7.2. Possible combinations for control valve system ELEMENT Type 8802-DF with SideControl Remote 29
7.3. Possible combinations for ELEMENT control valve system Type 8801-DF with control head or pneumatic control unit/position feedback 30

8. Ordering information 31

8.1. Bürkert eShop – Easy ordering and quick delivery 31
8.2. Bürkert product filter 31
8.3. Bürkert product enquiry form 31

DTS 1000450597 EN Version: - Status: RL (released | freigegeben | validé) printed: 21.12.2020

1. General technical data

Product properties	
Dimensions	Detailed information can be found in chapter "4. Dimensions" on page 7.
Material	
Forged body (VS)[1.)]	Forged stainless steel 316L/1.4435/BN2, Fe < 0.5 %/C ≤ 0.03 %
Tube valve body (VP)[1.)]	Stainless steel 316L/1.4435/BN2
Cast body (VG)[1.)]	Cast stainless steel 316L/1.4435
Plastic body (PV; PD; PP)[1.)]	0 (PVC-U); PVDF; PP
Diaphragm	EPDM (AD)[1.)], PTFE/EPDM (EA)[1.)], advanced PTFE/EPDM (EU)[1.)], Gylon®/EPDM laminated (ER)[1.)]
Actuator/Cover	PPS/Stainless steel 1.4561 (316Ti)
Diaphragm size	8…65; for plastic body 15…65
Standard surface quality	
Forged body (VS)[1.)]	Internal electrically polished : Ra ≤ 0.38 µm (NO17)[1.)] (ASME BPE SF4/DIN HE4) (external forged surface electrically polished) Internal mechanically polished : Ra ≤ 0.5 µm (NO14)[1.)] (ASME BPE SF1) (external forged surface)
Tube valve body (VP)[1.)]	Internal electrically polished : Ra ≤ 0.38 µm (NO17)[1.)] (ASME BPE SF4/DIN HE4) External glass bead blasted: Ra ≤ 1.6 µm (NO01)[1.)] Internal glass bead blasted: Ra ≤ 1.6 µm (NO05)[1.)]
Cast body (VG)[1.)]	Internal electrically polished : Ra ≤ 0.6 µm (NO16)[1.)] (ASME BPE SF6) (external cast surface electrically polished) Internal mechanically polished : Ra ≤ 0.76 µm (NO06)[1.)] (ASME BPE SF3/DIN H2) (external cast surface)
Performance data	
Pilot pressure (max.)	10 bar 7 bar for actuator size 130 See "5.2. Medium pressure" on page 22
Pilot air ports	Push-in connector for external, Ø6 mm or ¼" (standard); thread G ⅛"
Medium data	
Operating medium	Neutral gases and fluids, highly purified, sterile, aggressive or abrasive medium (see **Resistance Chart** ▶)
Medium temperature	
EPDM (AD)[1.)]	-10…+143 °C (steam sterilisation +150 °C for 60 min)
PTFE/EPDM (EA)[1.)]	-10…+130 °C (steam sterilisation +140 °C for 60 min)
Advanced PTFE/EPDM (EU)[1.)]	-5…+143 °C (steam sterilisation +150 °C for 60 min)
GYLON®/EPDM laminated (ER)[1.)]	-5…+130 °C (steam sterilisation +140 °C for 60 min)
Plastic body	See "3.2. Pressure temperature diagram for plastic body" on page 5
Control medium	Neutral gases, air
Process/Port connection & communication	
Nominal diameter	DN06…DN65 (⅛"…2½")
Port connections[2.)]	
For Stainless steel body[3.)]	
Welded connection[2.)]	DIN EN ISO 1127/ISO 4200/DIN 11866 series B DIN 11850 series 2/DIN 11866 series A/DIN EN 10357 series A ASME BPE/DIN 11866 series C
Clamp connection[2.)]	DIN 32676 series A (DIN pipe) DIN 32676 series B (ISO pipe) ASME BPE
For plastic body	
Spigot connection	DN15…DN50
True union	DN15…DN50
Loose flange	DN15…DN65

DTS 1000450597 EN Version: - Status: RL (released | freigegeben | validé) printed: 21.12.2020

Environment and installation	
Installation position/instructions	See **operating manual** ▶
Ambient temperature	-10…+60°C[5.)]

1.) This information is part of the product key (see product enquiry form at the end of this data sheet)
2.) Further versions on request
3.) Tube valve body (VP) also available with flange and threaded connections
4.) With plastic housings temperature limitation by housing material possible
5.) For standard version

2. Approvals

Note:
If you need one of these certificates, please contact your Bürkert partner.

Approvals/ Conformity/ Certificate[1.)]	Description
	ATEX/IECEx [2.)] EPS 18 ATEX 2 008 X II 2G Ex h IIC T4 Gb/II 2D Ex h IIIC T135 °C Db IECEx EPS 18.0007X Ex h IIC T4 Gb/Ex h IIIC T135 °C Db
TA-Air	TA-Air[3.)]
	3-A (3-A Sanitary Standards Symbol Administrative Council)[4.)]
	EHEDG (European Hygienic Engineering & Design Group)[5.) 6.)]
	The diaphragms made of EPDM (AD), PTFE/EPDM (EA), advanced PTFE (EU) and GYLON®/EPDM laminated (ER) are suitable for use with food and beverages (acc. to EC Regulation 1935/2004/EC).
	Diaphragms made of EPDM (AD), PTFE/EPDM (EA), advanced PTFE (EU) and GYLON®/EPDM laminated (ER) are acc. to USP Class VI tested.
FDA	Diaphragms made of EPDM (AD), PTFE/EPDM (EA), advanced PTFE (EU) and GYLON®/EPDM laminated (ER) comply with the Code of Federal Regulations published by the FDA (Food and Drug Administration, USA).

1.) Further approvals/conformity clarification on request
2.) Only in combination with variable code «PX51» (see product enquiry form at the end of this data sheet)
3.) Only in combination with variable code «PM01» (see product enquiry form at the end of this data sheet)
4.) Only in combination with variable code «PE05» (see product enquiry form at the end of this data sheet)
5.) For forged bodies only in connection with variable code «PI01» (see product enquiry form at the end of this data sheet)
6.) For all versions of the pipe forming body with EPDM or PTFE diaphragm

DTS 1000450597 EN Version: - Status: RL (released | freigegeben | validé) printed: 21.12.2020

3. Materials

3.1. Chemical Resistance Chart – Bürkert resistApp

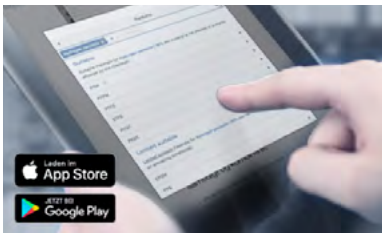

Bürkert resistApp – Chemical Resistance Chart

You want to ensure the reliability and durability of the materials in your individual application case? Verify your combination of media and materials on our website or in our resistApp.

Start Chemical Resistance Check

3.2. Pressure temperature diagram for plastic body

Note:
This information is important for material selection. Observe the permissible operating pressure depending on the medium temperature.

DN15...50

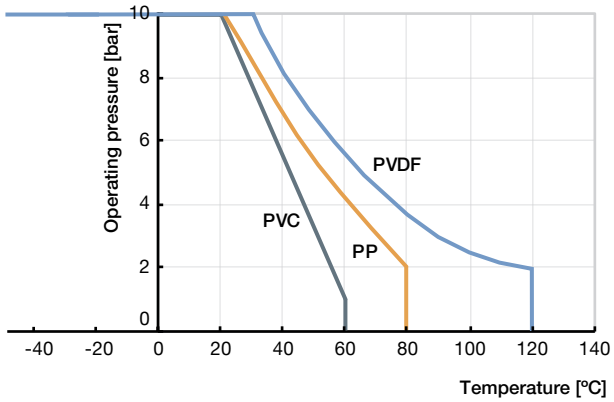

DTS 1000450597 EN Version: - Status: RL (released | freigegeben | validé) printed: 21.12.2020

3.3. Material specifications

Note:
Exemplary representation may differ from the actual product.

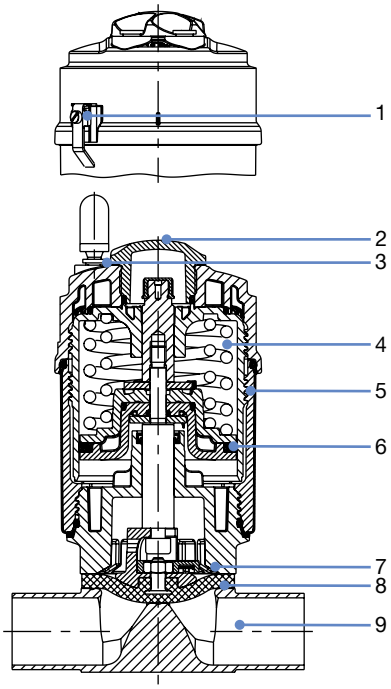

No.	Element	Material
1	Ground terminal	Stainless steel 1.4301/1.4305 (only for ATEX/IECEx version)
2	Optical position indicator	Polysulfone PSU
3	Pilot air ports	Push-in connector PP (Standard); Thread G ⅛" stainless steel 1.4305
4	Actuator	Polyphenylene sulphide PPS
5	Cover	Stainless steel 1.4561 (316Ti)
6	Piston seal	FKM
7	Interface	Polyphenylene sulphide PPS (Standard) Stainless steel 1.4308 (360° rotatable on request)
8	Diaphragm	EPDM (AD), PTFE/EPDM (EA), advanced PTFE/ EPDM (EU), Gylon®/EPDM laminated (ER)
9	Valve body	See **"1. General technical data" on page 3**

3.4. Example of available membrane materials

The diaphragms have been developed to meet the unique challenges of hygienic and sterile requirements. Bürkert offers diaphragms with precise material composition and high accuracy. Bürkert diaphragms are available in a wide range of materials which have been tested and proven in applications in the food and beverage, biotechnology, pharmaceutical and cosmetics industries. The diaphragms are tested during development and production to ensure reliability under difficult process conditions.

- EPDM (AD)
- PTFE/EPDM (EA)
- advanced PTFE/EPDM (EU)
- Gylon®/EPDM laminated (ER)

For further information please refer to our flyer "Diaphragm competence for hygienic applications" on our **website** ▸.

DTS 1000450597 EN Version: - Status: RL (released | freigegeben | validé) printed: 21.12.2020

4. Dimensions

4.1. Actuator

ELEMENT actuator

Note:
Dimensions in mm, unless otherwise stated

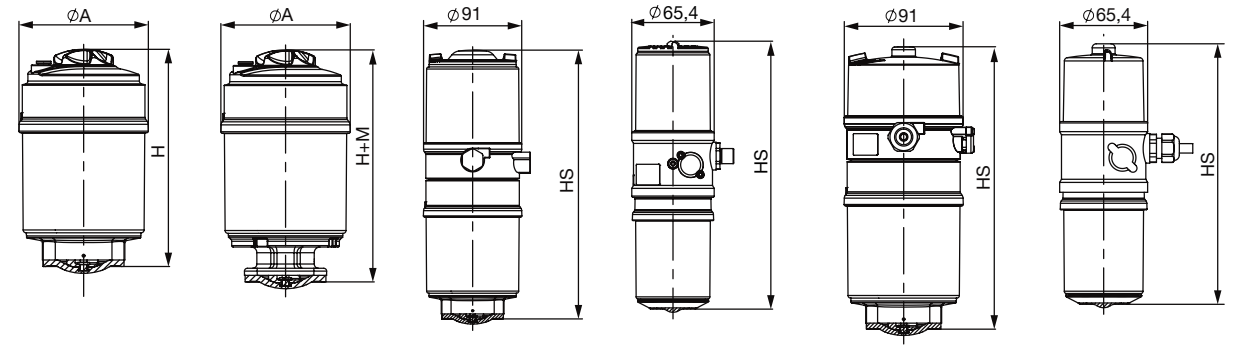

2103 mit Kunststoff Schnittstelle, PPS | 2103 mit 360° drehbarer Schnitts-telle, Edelstahl | 2103 mit Steuerkopf 8691 | 2103 mit Steuerkopf 8695 | 2103 mit pneuma-tischer Bedieneinheit 8690 | 2103 mit pneuma-tischer Bedieneinheit 8697

Diaphragm size	Actuator size Ø	ØA	H	HS with		H+M
				8691/8695	8690/8697	
8	50 (D)	65	119	207	194	141
15	50 (D)	65	132	220	206	146
	70 (M)	–	–	242	209	–
20	70 (M)	92	153	248	215	165
25	70 (M)	92	154	248	215	171
	90 (N)	120	187	282	249	204
32	90 (N)	120	202	297	264	215
40	90 (N)	120	206	300	268	221
	130 (P)	159	259	353	320	273
50	130 (P)	159	275	369	336	281
65	130 (P)	–	–	–	–	285

DTS 1000450597 EN Version: - Status: RL (released | freigegeben | validé) printed: 21.12.2020

4.2. Forged body (VS) with welded connection

Note:

- Dimensions in mm, unless otherwise stated
- For detailed information on the draining angle, please refer to the “Additional manual Type 2xxx 3xxx” on our website (see **operating instructions** ▶).

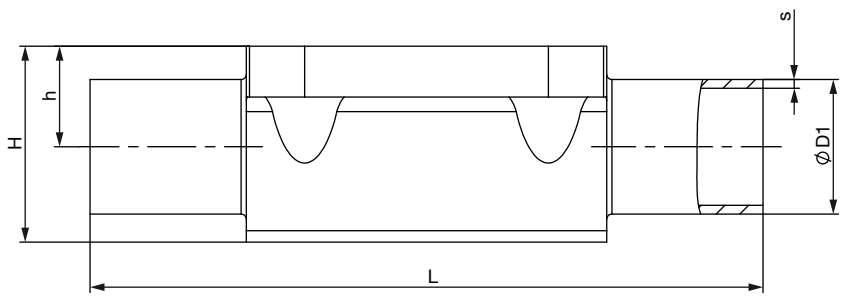

Diaphragm size	Port connection DN	ØD1	s	L	h	H	Product key[1.)]
DIN EN ISO 1127/ISO 4200/DIN 11866 series B							
8	8	13.5	1.6	90	9.3	18.8	SA40
15	8	13.5	1.6	108	8.15	19.85	SA40
8	10	17.2	1.6	90	9.3	18.8	SA41
15	10	17.2	1.6	110	12.05	23.75	SA41
15	15	21.3	1.6	110	12.05	23.75	SA42
20	15	21.3	1.6	119	16	30.3	SA42
20	20	26.9	1.6	119	16	30.3	SA43
25	20	26.9	1.6	119	19	37	SA43
25	25	33.7	2.0	129	19	37	SA44
40	25	33.7	2.0	161	27.6	52.4	SA44
40	32	42.4	2.0	161	27.6	52.4	SA45
40	40	48.3	2.0	161	27.6	52.4	SA46
50	50	60.3	2.0	192	35.5	68.3	SA47
DIN 11850 series 2/DIN 11866 series A/DIN EN 10357 series A							
8	10	13	1.5	90	9.3	18.8	SD40
15	10	13	1.5	110	8.15	19.85	SD40
15	15	19	1.5	110	12.05	23.75	SD42
20	20	23	1.5	119	16.0	30.3	SD43
25	25	29	1.5	129	19.0	37.0	SD44
40	32	35	1.5	161	27.6	52.4	SD45
40	40	41	1.5	161	27.6	52.4	SD46
50	50	53	1.5	192	35.5	68.3	SD47
ASME BPE/DIN 11866 series C							
8	¼"	6.35	0.89	78	5.7	15.2	SA90
8	⅜"	9.53	0.89	89	5.7	15.2	SA91
8	½"	12.7	1.65	89	9.3	18.8	SA92
15	½"	12.7	1.65	108	8.15	19.85	SA92
15	¾"	19.05	1.65	108	12.05	23.75	SA93
20	¾"	19.05	1.65	117	16.0	30.3	SA93
25	1"	25.4	1.65	127	19.0	37.0	SODF
40	1½"	38.1	1.65	159	27.6	52.4	SODH
50	2"	50.8	1.65	190	35.5	68.3	SODI
50	2½"	63.5	1.65	192	35.5	68.6	SODJ

DTS 1000450597 EN Version: - Status: RL (released | freigegeben | validé) printed: 21.12.2020

Diaphragm size	Port connection DN	ØD1	s	L	h	H	Product key[1.)]
BS 4825							
8	8	6.35	1.20	78	5.7	15.2	SODB
8	10	9.53	1.20	89	5.7	15.2	SODC
15	15	12.7	1.20	108	8.15	19.85	SODD
20	20	19.05	1.20	117	16.0	30.3	SODE
25	25	25.4	1.65	127	19.0	37.0	SODF
40	40	38.1	1.65	159	27.6	52.4	SODH
50	50	50.8	1.65	190	35.5	68.3	SODI
50	65	63.5	1.65	192	35.5	68.6	SODJ
SMS 3008							
25	25	25	1.2	129	19	37	SA60
40	40	38	1.2	161	27.6	52.4	SA62
50	50	51	1.2	192	35.5	68.3	SA63
DIN 11850 series 0							
8	6	8	1.0	90	5.7	15.2	SC41
8	8	10	1.0	90	5.7	15.2	SC42

1.) This information is part of the product key (see product enquiry form at the end of this data sheet)

DTS 1000450597 EN Version: - Status: RL (released | freigegeben | validé) printed: 21.12.2020

4.3. Forged body (VS) with clamp connection

Note:

- Dimensions in mm, unless otherwise stated
- For detailed information on the draining angle, please refer to the “Additional manual Type 2xxx 3xxx” on our website (see **operating instructions** ▶).

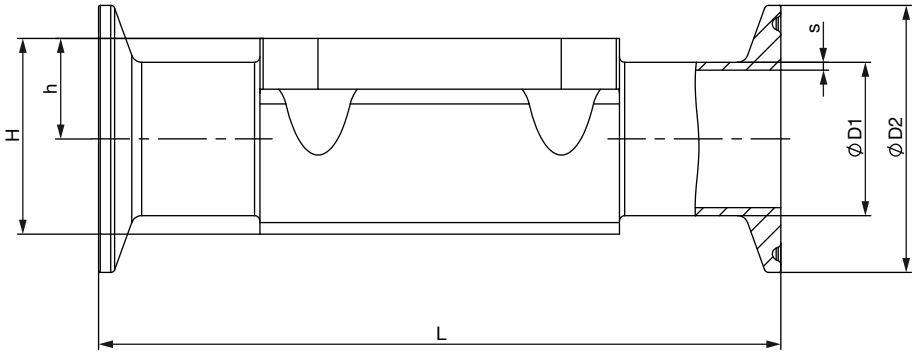

Diaphragm size	Port connection DN	Ø D1	s	Ø D2	L	h	H	Product key[1.)]	Variable code[1.)]
DIN 32676 series B (ISO pipe)									
15	15	21.3	1.6	50.5	167	12.05	23.75	TC53	–
20	20	26.9	1.6	50.5	114	16.0	30.3	TC43	–
25	25	33.7	2	50.5	129	19	37	TC44	–
40	40	48.3	2	64.0	161	27.6	52.4	TC46	–
50	50	60.3	2	77.5	190	35.5	68.3	TC47	–
DIN 32676 series A (DIN pipe)									
8	10	13	1.5	34.0	126	9.3	18.8	TD41	–
15	10	13	1.5	34.0	110	8.15	19.85	TD41	–
15	15	19	1.5	34.0	110	12.05	23.75	TD42	–
20	20	23	1.5	34.0	119	16	30.3	TD43	–
25	25	29	1.5	50.5	129	19	37	TD44	–
40	40	41	1.5	50.5	161	27.6	52.4	TD46	–
50	50	53	1.5	64.0	192	35.5	68.3	TD47	–
ASME BPE									
8	¼"	6.35	0.89	25.0	64.5	5.7	15.2	TG50	–
8	⅜"	9.53	0.89	25.0	89	5.7	15.2	TG01	AF34
8	½"	12.7	1.65	25.0	64	9.3	18.8	TG02	–
8	½"	12.7	1.65	25.0	89	9.3	18.8	TG02	AF34
15	½"	12.7	1.65	25.0	89	8.15	19.85	TG02	–
15	½"	12.7	1.65	25.0	108	8.15	19.85	TG02	AF34
15	¾"	19.05	1.65	25.0	89	12.05	23.75	TG03	–
20	¾"	19.05	1.65	25.0	102	16	30.3	TG03	–
20	¾"	19.05	1.65	25.0	117	16	30.3	TG03	AF34
25	1"	25.4	1.65	50.5	114	19	37	TG04	–
25	1"	25.4	1.65	50.5	127	19	37	TG04	AF34
40	1½"	38.1	1.65	50.5	140	27.6	52.4	TG05	–
40	1½"	38.1	1.65	50.5	159	27.6	52.4	TG05	AF34
50	2"	50.8	1.65	64.0	159	35.5	68.3	TG06	–
50	2"	50.8	1.65	64.0	190	35.5	68.3	TG06	AF34
65	2½"	63.5	1.65	77.5	249	43	83.5	TG07	–

1.) This information is part of the product key (see product enquiry form at the end of this data sheet)

DTS 1000450597 EN Version: - Status: RL (released | freigegeben | validé) printed: 21.12.2020

4.4. Tube valve body (VP) with welded connection

Note:

- Dimensions in mm, unless otherwise stated
- For detailed information on the draining angle, please refer to the “Additional manual Type 2xxx 3xxx” on our website (see **operating instructions** ▶).

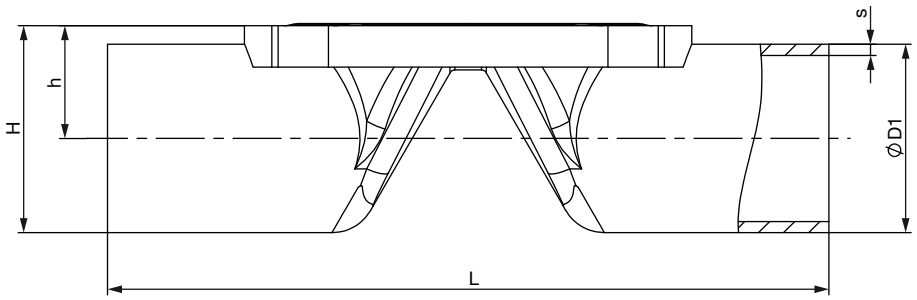

Diaphragm size	Port connection DN	ØD1	s	L	h	H	Product key[1.)]
DIN EN ISO 1127/ISO 4200/DIN 11866 series B							
8	8	13.5	1.6	90.0	9.85	16.6	SA40
8	10	17.2	1.6	90.0	11.70	20.3	SA41
15	15	21.3	1.6	110.0	14.35	25.0	SA42
20	20	26.6	1.6	119.0	17.15	30.45	SA43
25	25	33.7	2.0	129.0	20.55	37.4	SA44
32	32	42.4	2.0	148.0	25.10	46.3	SA45
40	40	48.3	2.0	161.0	29.35	53.5	SA46
50	50	60.3	2.0	192.0	35.35	65.50	SA47
DIN 11850 series 2/DIN 11866 series A/DIN EN 10357 series A							
8	10	13	1.5	90	9.85	16.35	SD40
15	15	19	1.5	110	13.20	22.70	SD42
15	20	23	1.5	119	15.20	26.70	SD43
20	25	29	1.5	129	18.20	32.70	SD44
25	32	35	1.5	148	21.20	38.70	SD45
32	40	41	1.5	161	24.40	44.90	SD46
40	50	53	1.5	192	31.70	58.20	SD47
ASME BPE/DIN 11866 series C							
8	½"	12.7	1.65	90.0	9.45	21.95	SA92
15	¾"	19.05	1.65	117.0	13.23	25.73	SA93
20	1"	25.4	1.65	127.0	16.40	41.65	SODF
32	1½"	38.1	1.65	159.0	22.95	48.20	SODH
40	2"	50.8	1.65	190	30.60	62.60	SODI

1.) This information is part of the product key (see product enquiry form at the end of this data sheet)

DTS 1000450597 EN Version: - Status: RL (released | freigegeben | validé) printed: 21.12.2020

4.5. Tube valve body (VP) with clamp connection

Note:

- Dimensions in mm, unless otherwise stated
- For detailed information on the draining angle, please refer to the “Additional manual Type 2xxx 3xxx” on our website (see **operating instructions** ▶).

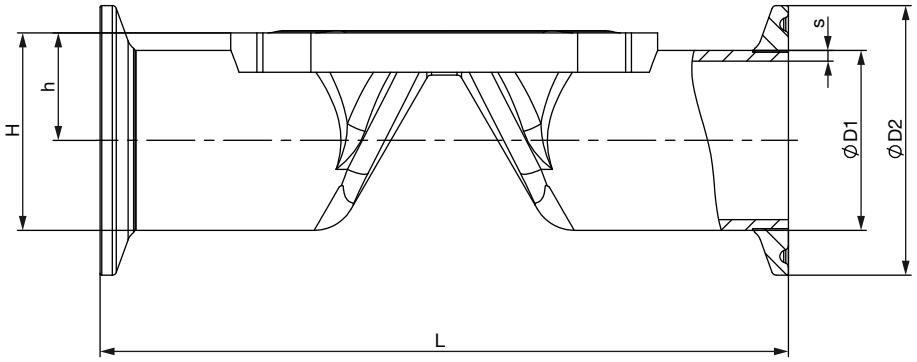

Diaphragm size	Port connection DN	Ø D1	s	Ø D2	L	h	H	Product key[1.)]
DIN 32676 series B (ISO pipe)								
8	8	13.5	1.6	25.0	89	9.85	22.35	TC40
8	10	17.2	1.6	25.0	89	11.70	24.20	TC53
15	15	21.3	1.6	50.5	110	14.35	39.60	TC52
20	20	26.6	1.6	50.5	119	17.15	42.40	TC43
25	25	33.7	2.0	50.5	129	20.55	45.80	TC44
32	32	42.4	2.0	64.0	148	25.10	57.10	TC55
40	40	48.3	2.0	64.0	161	29.35	61.35	TC46
50	50	60.3	2.0	77.5	192	35.35	74.10	TC47
DIN 32676 series A (DIN pipe)								
8	10	13.0	1.5	34.0	89	9.85	26.85	TD41
15	15	19.0	1.5	34.0	110	13.2	30.20	TD42
15	20	23.0	1.5	34.0	119	15.20	32.20	TD43
20	25	29.0	1.5	50.5	129	18.20	43.45	TD44
25	32	35.0	1.5	50.5	148	21.20	46.45	TD45
32	40	41.0	1.5	50.5	161	24.40	49.65	TD46
40	50	53.0	1.5	64.0	192	31.70	63.70	TD47
ASME BPE								
8	½"	12.7	1.65	25.0	89	9.45	21.95	TG02
15	¾"	19.05	1.65	25.0	102	13.20	25.73	TG03
20	1"	25.4	1.65	50.5	114	16.40	41.65	TG04
32	1½"	38.10	1.65	50.5	140	22.95	48.20	TG05
40	2"	50.80	1.65	64.0	159	30.60	62.60	TG06

1.) This information is part of the product key (see product enquiry form at the end of this data sheet)

DTS 1000450597 EN Version: - Status: RL (released | freigegeben | validé) printed: 21.12.2020

DTS 1000450597 EN Version: - Status: RL (released | freigegeben | validé) printed: 21.12.2020

4.6. Tube valve body (VP) with threaded connection

Note:

- Dimensions in mm, unless otherwise stated
- For detailed information on the draining angle, please refer to the “Additional manual Type 2xxx 3xxx” on our website (see **operating instructions** ▶).

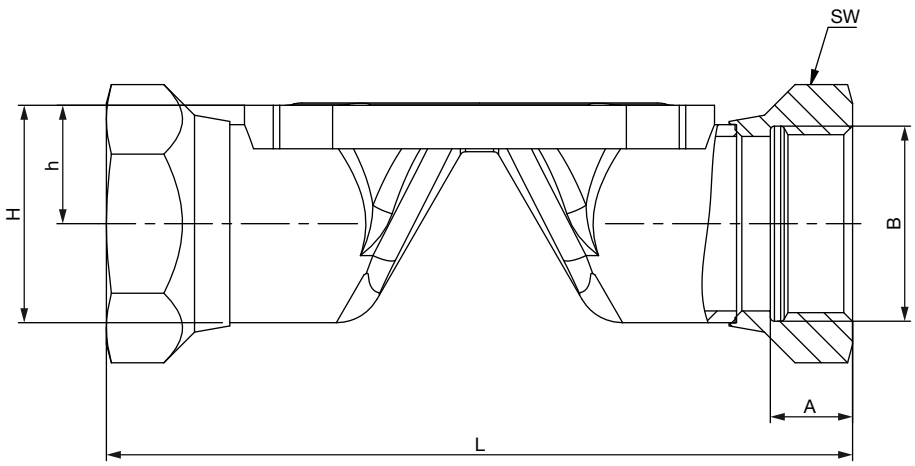

Diaphragm size	L	A	B	h	H	Spanner width of threaded ports	Product key[1.)]
08	85	9	G ¼	11.70	20.3	17	GM82
15	102	14	G ½	14.35	25.0	27	GM84
20	118	12	G ¾	17.15	30.45	32	GM85
25	127	14	G 1	20.55	37.4	41	GM86
32	146	16	G 1¼	25.10	46.3	50	GM87
40	159	18	G 1½	29.35	53.5	60	GM88
50	191	20	G 2	35.35	65.50	70	GM89
Diaphragm size	**L**	**A**	B	**h**	**H**	**Spanner width of threaded ports**	**Product key[1.)]**
08	85	9.7	Rc ¼	11.70	20.3	17	RC82
15	102	13.2	Rc ½	14.35	25.0	27	RC84
20	118	14.5	Rc ¾	17.15	30.45	32	RC85
25	127	16.8	Rc 1	20.55	37.4	41	RC86
32	146	19.1	Rc 1¼	25.10	46.3	50	RC87
40	159	19.1	Rc 1½	29.35	53.5	60	RC88
50	191	23.4	Rc 2	35.35	65.50	70	RC89
Diaphragm size	**L**	**A**	B	**h**	**H**	**Spanner width of threaded ports**	**Product key[1.)]**
08	85	10	NPT ¼	11.70	20.3	17	NM82
15	102	13.7	NPT ½	14.35	25.0	27	NM84
20	118	14	NPT ¾	17.15	30.45	32	NM85
25	127	16.8	NPT 1	20.55	37.4	41	NM86
32	146	17.3	NPT 1¼	25.10	46.3	50	NM87
40	159	17.3	NPT 1½	29.35	53.5	60	NM88
50	191	17.6	NPT 2	35.35	65.50	70	NM89

1.) This information is part of the product key (see product enquiry form at the end of this data sheet)

4.7. Tube valve body (VP) with flange connection

Note:

- Dimensions in mm, unless otherwise stated
- For detailed information on the draining angle, please refer to the “Additional manual Type 2xxx 3xxx” on our website (see **operating instructions** ▶).

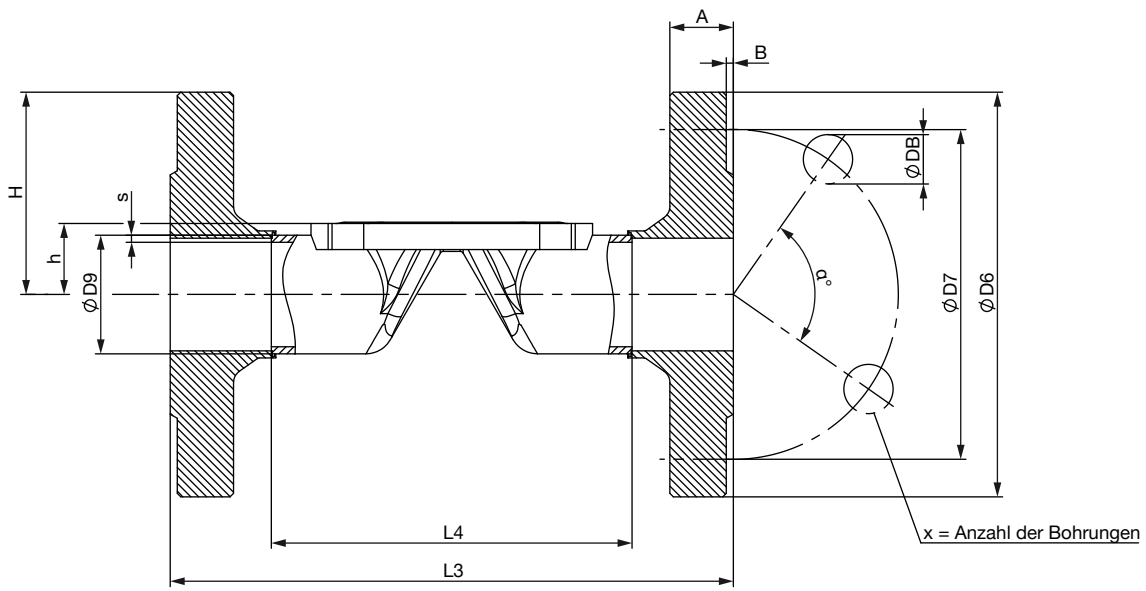

Diaphragm size	L4	L3	s3	ØD9	ØD6	ØD7	a°	ØDB	A	B	X	Product key[1.)]
DIN EN 1092-1												
15	76.5	130	1.6	21.3	76.5	65.0	90	14	16	2	4	FD22
20	92.5	150	1.6	26.9	92.5	75.0	90	14	18	2	4	FD23
25	102.5	160	2.0	33.7	102.5	85.0	90	14	18	2	4	FD24
32	122.5	180	2.0	42.4	122.5	100.0	90	18	18	2	4	FD25
40	136.5	200	2.0	48.3	136.5	110.0	90	18	18	3	4	FD26
50	160.5	230	2.0	60.3	160.5	125.0	90	18	20	3	4	FD27
ANSI B16.5												
15	67.0	130	1.6	21.3	89	60.5	90	15.7	11.2	1.6	4	FA02
25	106.0	160	2.0	33.7	108	79.2	90	15.7	14.2	1.6	4	FA04
40	128.0	200	2.0	48.3	127	98.6	90	15.7	17.5	1.6	4	FA06
50	151.0	230	2.0	60.3	152	120.7	90	19.1	19.1	1.6	4	FA07
JIS 10K												
15	89	130	1.6	21.3	95	70	90	15	12	1	4	FJ02
20	103	150	1.6	26.9	100	75	90	15	14	1	4	FJ02
25	116	160	2.0	33.7	125	90	90	19	14	1	4	FJ03
40	147	200	2.0	48.3	140	105	90	19	16	2	4	FJ05
50	175	230	2.0	60.3	155	120	90	19	16	2	4	FJ06

1.) This information is part of the product key (see product enquiry form at the end of this data sheet)

DTS 1000450597 EN Version: - Status: RL (released | freigegeben | validé) printed: 21.12.2020

Cast body (VG) with welded connection

Note:

- Dimensions in mm, unless otherwise stated
- For detailed information on the draining angle, please refer to the “Additional manual Type 2xxx 3xxx” on our website (see **operating instructions** ▶).

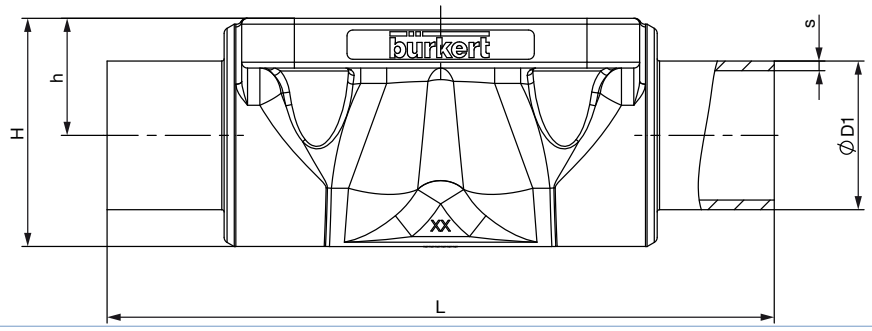

Diaphragm size	Port connection DN	ØD1	s	L	h	H	Product key[1.)]
DIN EN ISO 1127/ISO 4200/DIN 11866 series B							
8	8	13.5	1.6	90	9.6	18.5	SA40
8	10	17.2	1.6	90	9.6	18.6	SA41
15	15	21.3	1.6	110	13.5	25.0	SA42
20	15	21.3	1.6	119	18.0	32.9	SA42
20	20	26.9	1.6	119	18.0	32.7	SA43
25	25	33.7	2.0	129	20.0	39.0	SA44
40	32	42.4	2.0	161	28.6	55.0	SA45
40	40	48.3	2.0	161	28.6	55.0	SA46
50	50	60.3	2.0	192	35.5	68.0	SA47
65	65	76.1	2.0	192	43.0	82.0	SA48
DIN 11850 series 2/DIN 11866 series A/DIN EN 10357 series A							
8	10	13	1.5	90	9.6	18.6	SD40
15	15	19	1.5	110	13.5	25.0	SD42
20	20	23	1.5	119	18.0	32.8	SD43
25	25	29	1.5	129	20.0	39.0	SD44
40	40	41	1.5	161	28.6	55.0	SD46
50	50	53	1.5	192	35.5	68.0	SD47
65	65	70	2.0	192	43.0	82.0	SD48
ASME BPE/DIN 11866 series C							
8	¼"	6.35	0.89	64.5	9.6	18.6	SA90
8	⅜"	9.53	0.89	89	9.6	18.6 (18.9)	SA91
8	½"	12.7	1.65	89	9.6	18.6	SA92
15	¾"	19.05	1.65	102	13.5	25.0	SA93
20	¾"	19.05	1.65	119	18.0	32.8	SA93
20	1"	25.4	1.65	119	18.0	32.7	SODF
25	1"	25.4	1.65	114	20.0	39.0	SODF
40	1½"	38.1	1.65	140	28.6	55.0	SODH
50	2"	50.8	1.65	159	35.5	68.0	SODI
50	2½"	63.5	1.65	192	35.5	68.0	SODJ
65	2½"	63.5	1.65	192	43.0	82.0	SODJ

DTS 1000450597 EN Version: - Status: RL (released | freigegeben | validé) printed: 21.12.2020

Diaphragm size	Port connection DN	ØD1	s	L	h	H	Product key[1.)]
BS 4825							
8	8	6.35	1.20	64.5	9.6	18.6	SODB
8	10	9.53	1.20	89	9.6	18.6	SODC
8	15	12.7	1.20	89	9.6	18.6	SODD
15	20	19.05	1.20	102	14.0	25.5	SODE
20	25	25.4	1.65	119	18.0	32.8	SODF
25	25	25.4	1.65	114	20.0	39.0	SODF
40	40	38.1	1.65	140	28.6	55.0	SODH
50	50	50.8	1.65	159	35.5	68.0	SODI
50	65	63.5	1.65	192	35.5	68.0	SODJ
65	65	63.5	1.65	192	43.0	82.0	SODJ
SMS 3008							
20	25	25	1.2	119	18.0	32.8	SA60
25	25	25	1.2	129	20.0	39.0	SA60
40	40	38	1.2	161	28.6	55.0	SA62
50	50	51	1.2	192	35.5	68.0	SA63
DIN 11850 series 0							
8	4	6	1.0	90	9.6	18.6	SC40
8	6	8	1.0	90	9.6	18.6	SC41
8	8	10	1.0	90	9.6	18.6	SC42
15	15	18	1.5	110	13.5	25.0	SC43
20	20	22	1.5	119	18.0	32.8	SC44
25	25	28	1.5	129	20.0	39.0	SC45
25	32	34	1.5	129	20.0	39.0	SC46
40	40	40	1.5	161	28.6	56.0	SC47
50	50	52	1.5	192	35.5	68.0	SC48

1.) This information is part of the product key (see product enquiry form at the end of this data sheet)

DTS 1000450597 EN Version: - Status: RL (released | freigegeben | validé) printed: 21.12.2020

4.8. Cast body (VG) with clamp connection

Note:

- Dimensions in mm, unless otherwise stated
- For detailed information on the draining angle, please refer to the “Additional manual Type 2xxx 3xxx” on our website (see **operating instructions** ▶).

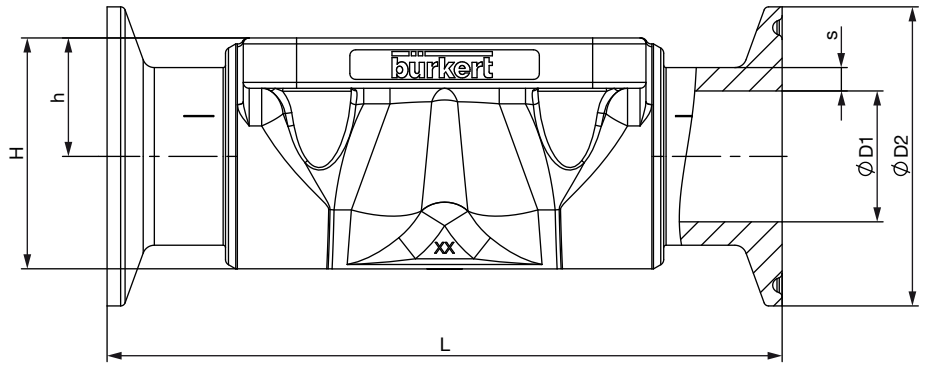

Diaphragm size	Port connection DN	ØD1	s	ØD2	L	h	H	Product key[1.)]
DIN 32676 series B (ISO pipe)								
25	25	33.7	2	50.5	129	20.0	39.0	TC44
40	40	48.3	2	64.0	161	28.6	55.0	TC46
50	50	60.3	2	77.5	192	35.5	68.0	TC47
DIN 32676 series A (DIN pipe)								
15	15	19	1.5	34.0	110	13.5	25.0	TD42
20	20	23	1.5	34.0	119	18.0	32.8	TD43
25	25	29	1.5	50.5	129	20.0	39.0	TD44
40	40	41	1.5	50.5	161	28.6	55.0	TD46
50	50	53	1.5	64.0	192	35.5	68.0	TD47
ASME BPE								
8	⅜"	9.53	0.89	25.0	89	9.6	18.6	TG01
8	½"	12.7	1.65	25.0	89	9.6 (9.3)	18.6	TG02
15	¾"	19.05	1.65	25.0	102	13.5	23.0	TG03
20	¾"	19.05	1.65	25.0	117	18.0	25.0	TG03
25	1"	25.4	1.65	50.5	114	18.0	40.0	TG04
40	1½"	38.1	1.65	50.5	140	28.6	55.0	TG05
50	2"	50.8	1.65	64.0	159	35.5	68.0	TG06
50	2½"	63.5	1.65	77.5	190	35.5	68.0	TG07
65	2½"	63.5	1.65	77.5	249.2	43.0	82.0	TG07
BS 4825: Clamp BS 4825-3/pipe BS 4825-1								
8	15	12.7	1.2	25	89	9.6	18.9	TH42
15	20	19.05	1.2	25	102	13.5	25.0	TH43
25	25	25.4	1.65	50.5	114	20.0	39.0	TG04
40	40	38.1	1.65	50.5	140	28.6	55.0	TG05
50	50	50.8	1.65	64.0	159	35.5	68.0	TG06
50	65	63.5	1.65	77.5	190	35.5	68.0	TG07
Clamp 34.0 similar to DIN 32676 series B (ISO pipe)								
15	15	21.3	1.6	34	110	13.5	25.0	TC42

1.) This information is part of the product key (see product enquiry form at the end of this data sheet)

DTS 1000450597 EN Version: - Status: RL (released | freigegeben | validé) printed: 21.12.2020

4.9. Plastic body (PV; PD; PP) with spigot connections

Note:
Dimensions in mm, unless otherwise stated

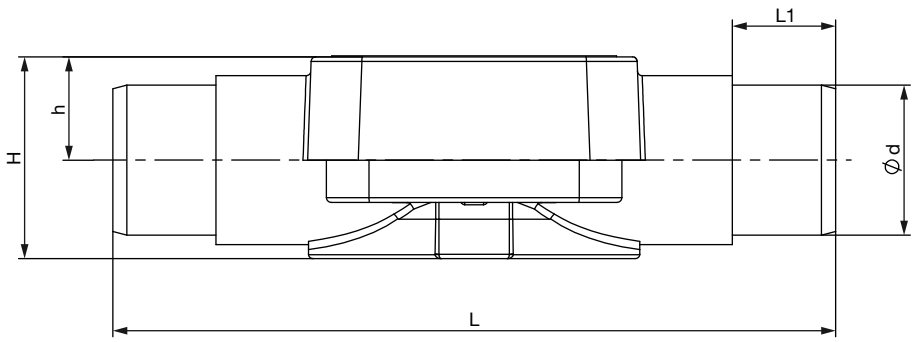

Diaphragm size	Ø d	Wall thick-ness	h	H	L	L1	Product key[1.)]
PVC-U (PV)							
15	20	2.5	15	29	124	16	KS25
20	25	2.5	18.5	36	144	19	KS26
25	32	3.5	22	43	154	22	KS27
32	40	4	27	52.5	174	26	KS28
40	50	5	33	65.5	194	31	KS29
50	63	6.5	40	79	224	44	KS30
PVDF (PD) and PP (PP)							
15	20	2.5	15	29	124	16	SS25
20	25	2.5	18.5	36	144	19	SS26
25	32	3.5	22	43	154	22	SS27
32	40	4	27	52.5	174	26	SS28
40	50	5	33	65.5	194	31	SS29
50	63	6.5	40	79	224	44	SS30

1.) This information is part of the product key (see product enquiry form at the end of this data sheet)

DTS 1000450597 EN Version: - Status: RL (released | freigegeben | validé) printed: 21.12.2020

4.10. Plastic body (PV, PD, PP) with true union

Note:
Dimensions in mm, unless otherwise stated

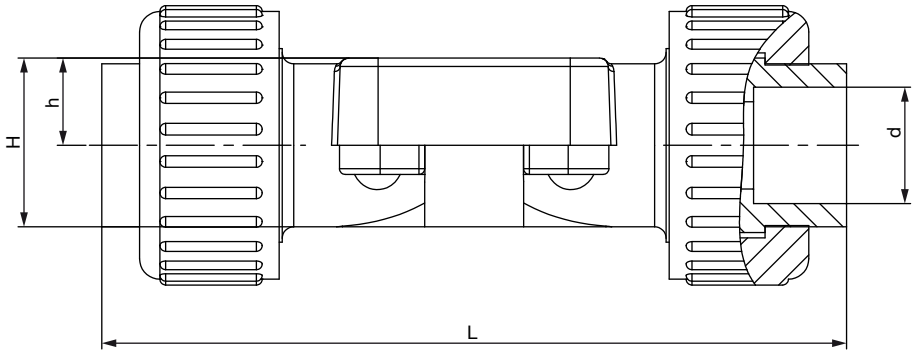

Diaphragm size	L	h	H	Ød	Product key[1.)]
PVC-U (PV)					
15	128	15	29	20	KM25
20	152	18.5	36	25	KM26
25	166	22	43	32	KM27
32	192	27	52.5	40	KM28
40	222	33	65.5	50	KM29
50	266	40	79	63	KM30
PVDF (PD)					
15	129	15	29	20	SM25
20	150	18.5	36	25	SM26
25	162	22	43	32	SM27
32	184	27	52.5	40	SM28
40	210	33	65.5	50	SM29
50	248	40	79	63	SM30
PP (PP)					
15	125	15	29	20	SM25
20	146	18.5	36	25	SM26
25	158	22	43	32	SM27
32	181	27	52.5	40	SM28
40	207	33	65.5	50	SM29
50	245	40	79	63	SM30

1.) This information is part of the product key (see product enquiry form at the end of this data sheet)

DTS 1000450597 EN Version: - Status: RL (released | freigegeben | validé) printed: 21.12.2020

4.11. Plastic body (PV, PD, PP) with flange connection

Note:
Dimensions in mm, unless otherwise stated

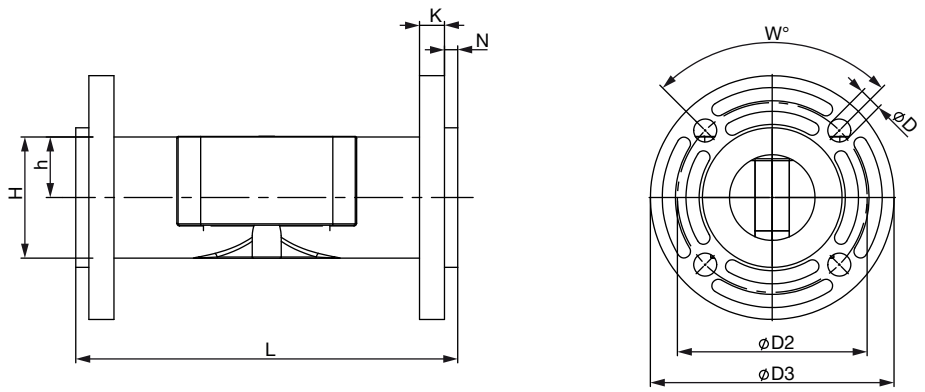

Diaphragm size	L	ØD2	ØD3	K	H	h	ØD	W	N	Product key[1.)]
PVC-U (PV), PVDF (PD) and PP (PP)										
15	130	65.5	96	12	–	–	14	4x90°	5.9	FL24
20	150	75	105	14	–	–	14	4x90°	6.9	FL25
25	160	85	115	15	–	–	14	4x90°	6.9	FL26
32	180	100	140	17	–	–	18	4x90°	7.9	FL27
40	200	110	150	17	–	–	18	4x90°	8	FL28
50	230	125	165	18	–	–	18	4x90°	9	FL29

1.) This information is part of the product key (see product enquiry form at the end of this data sheet)

DTS 1000450597 EN Version: - Status: RL (released | freigegeben | validé) printed: 21.12.2020

5. Performance specifications

5.1. Flow characteristics

Note:

- The K_V values may vary slightly with different actuator sizes and diaphragm materials.
- Further K_V values on request
- Flow rate: K_V value water (m^3/h) for elastomer diaphragm
- Measurement at +20 °C, 4 bar at valve inlet and 3 bar at valve outlet

Forged body (VS)

Dia-phragm size	Port connection		K_V value [m^3/h]					
			DIN EN ISO 1127 ISO 4200 DIN 11866 series B	DIN 11850 series 2 DIN 11866 series A DIN EN 10357 series A	ASME BPE DIN 11866 series C	DIN 11850 series 0	BS4825	SMS3008
DN	[mm]	[inch]	[m^3/h]	[m^3/h]	[m^3/h]	[m^3/h]	[m^3/h]	[m^3/h]
8	6	⅛"	–	–	–	1.1	–	–
8	8	¼"	1.5	–	0.7	1.7	0.5	–
8	10	⅜"	1.5	1.5	1.6	–	1.4	–
8	15	½"	–	–	1.5	–	–	–
15	10	⅜"	5.5	3.5	–	–	–	–
15	15	½"	6.5	6.5	3.1	–	3.7	–
15	20	¾"	–	–	6.5	–	–	–
20	20	¾"	12.5	12.4	8.4	–	8.9	–
25	25	1"	18	20	15.5	–	15.5	16
40	32	1¼"	–	34	–	–	–	–
40	40	1½"	41	40	37	–	37	38
50	50	2"	66	66	66	–	66	66
50	65	2½"	–	–	66	–	66	66

Tube valve body (VP)

Diaphragm size	Port connection		K_V value [m^3/h]		
			DIN EN ISO 1127 ISO 4200 DIN 11866 series B	DIN 11850 series 2 DIN 11866 series A DIN EN 10357 series A	ASME BPE DIN 11866 series C
DN	[mm]	[inch]	[m^3/h]	[m^3/h]	[m^3/h]
8	8	¼"	1.9	–	–
8	10	⅜"	–	1.9	–
8	15	½"	–	–	1.8
15	10	⅜"	–	–	7.1
15	15	½"	7.2	7.4	–
15	20	¾"	–	7.4	–
20	20	¾"	13.5	–	–
20	25	1"	–	14.9	12.8
25	32	1¼"	–	22.3	–
25	25	1"	20.8	–	–
32	40	1½"	–	34.8	31
40	40	1½"	47.9	–	–
40	50	2"	–	46.2	43
50	50	2"	69.7	–	–

DTS 1000450597 EN Version: - Status: RL (released | freigegeben | validé) printed: 21.12.2020

Cast body (VG)

Diaphragm size	Port connection		K_v value
DN	[mm]	[inch]	[m³/h]
8	8	¼"	1
15	15	½"	5.6
20	20	¾"	10.7
25	25	1"	14.6
40	40	1½"	35
50	50	2"	47

Plastic body (PV; PD; PP)

Diaphragm size	Port connection		K_v value
DN	[mm]	[inch]	[m³/h]
15	15	½"	3
20	20	¾"	7
25	25	1"	11.4
32	32	1¼	17
40	40	1½"	24.5
50	50	2"	41.5

5.2. Medium pressure

Information for control function A

Note:

- For low operating pressures, optional versions with reduced spring force **(EC04)** are recommended.
- Pressure data [bar]: Overpressure to atmospheric pressure. Valve closes dynamically against max. operating pressure.
- Information for control function B and I on request.

Diaphragm size	Actuator size Ø	Pilot pressure	Max. operating pressure for seal material	
			EPDM, FKM	PTFE/EPDM, advanced PTFE/EPDM, GYLON®/EPDM laminated
DN	[mm]	[bar]	[bar]	[bar]
8	50 (D)	5.0…10	10	10
15	50 (D)	5.0…10	7.5	–
	70 (M)		10	10
20	70 (M)	5.0…10	10	10
25	70 (M)	5.0…10	6.5	8
	90 (N)	5.0…10	10	6
40	90 (N)	5.5…10	5.5	5
	130 (P)	5.0…7	10	10
50	130 (P)	5.0…7	10	7
65	130 (P)	5.0…7	5.5	3.5

DTS 1000450597 EN Version: - Status: RL (released | freigegeben | validé) printed: 21.12.2020

6. Product accessories

Process controller TopControl	
Type 8693 ▸ **Actuator size Ø 70/90/130 mm**	**Description**
	The intelligent process controller Type 8693 is designed for integrated mounting on pneumatic actuators from the process control valve series Type 23xx/2103 and especially for the requirements of hygienic process conditions. Using the TUNE-Functions, the process controller and positioner can be initialized automatically. Easy operation and selection of additional software functions as well as parameterization are carried out via the large graphic display and the keypad. Device configuration and parameterization can also be conveniently carried out by the Bürkert Communicator software tool via a PC interface. **Features** • Contact-free position sensor • Universal positioning system for single and double-acting actuators • Ultra dynamic positioning system without air consumption in steady state • Integrated diagnostic functions for valve monitoring • Automatic initialization of the positioner and process controller using the TUNE-Function • Defined safe position in case of electrical or pneumatic auxiliary power failure • PROFIBUS DP-V1, DeviceNet, EtherNet/IP, PROFINET, Modbus TCP, Bürkert system bus (büS) • Compact and robust hygienic stainless steel design **Customer benefits** • Quick and easy commissioning • Intuitive and simple operation via graphic display with backlight and keypad • High degree of system availability due to increased actuator service life by means of spring chamber ventilation • Guaranteed reliability and predictable maintenance through valve monitoring and diagnostics • Easy maintenance and process monitoring

DTS 1000450597 EN Version: - Status: RL (released | freigegeben | validé) printed: 21.12.2020

DTS 1000450597 EN Version: - Status: RL (released | freigegeben | validé) printed: 21.12.2020

Positioner TopControl

Type 8692 ▸ Actuator size Ø 70/90/130 mm	Description
	The intelligent electropneumatic positioner Type 8692 is designed for integrated attachment to pneumatic actuators of the process control valve series Type 23xx/2103 and especially for the requirements of hygienic process conditions. The positioner can be initialized automatically using the TUNE-Function. Easy operation and the selection of the extensive additional software functions as well as parameterization are carried out via the large graphic display and keypad. The device configuration and parameterization can also be conveniently carried out using the Bürkert Communicator software tool via a PC interface. **Features** • Contact-free position sensor • Universal positioning system for single and double-acting actuators • Ultra dynamic positioning system without air consumption in steady state • Integrated diagnostic functions for valve monitoring • Automatic initialization of the positioner by means of the TUNE-Function • Defined safe position in case of electrical or pneumatic auxiliary power failure • PROFIBUS DP-V1, DeviceNet, EtherNet/IP, PROFINET, Modbus TCP, Bürkert system bus (büS) • Compact and robust hygienic stainless steel design **Customer benefits** • Quick and easy commissioning • Intuitive and simple operation via graphic display with backlight and touch keypad • High degree of system availability due to increased actuator service life by means of spring chamber ventilation • Guaranteed reliability and predictable maintenance through valve monitoring and diagnostics

Positioner TopControl BASIC

Type 8694 ▸ Actuator size Ø 70/90/130 mm	Description
	The compact positioner Type 8694/8696 is designed for integrated attachment to pneumatic actuators of the Type 23xx/2103 process control valve series and especially for the requirements of hygienic process conditions. Operation and parameterization are performed via push buttons and DIP switches. The device configuration and parameterization can also be conveniently carried out using the Bürkert Communicator software tool via a PC interface. **Features** • Contact-free position sensor • Universal positioning system for single and double-acting actuators • Ultra dynamic positioning system without internal control air consumption • AS-Interface, IO-Link, Bürkert system bus (büS) (only 8694) • Compact and robust hygienic stainless steel design **Customer benefits** • Simple and safe commissioning through Teach-In function • Minimum space requirement in the plant pipework for more flexibility in plant design • High degree of system availability due to increased actuator service life by means of spring chamber ventilation
Type 8696 ▸ **Actuator size Ø 50 mm**	

Process controller SideControl Remote	
Type 8793 ▸ with Remote Sensor 8798 ▸ Actuator size Ø 70/90/130 mm	**Description**
	The intelligent digital positioner/process controller Type 8793 is designed for mounting on lift or swivel drives with standardization in accordance with IEC 534 - 6 or VDI/VDE 3845 and is designed for demanding control tasks. The version with remote position sensor Type 8798 is used to control Bürkert process control valves. It is operated via a backlit graphic display. The initialization of process and positioner can be done automatically by means of TUNE-Function. Here the type of controlled system is automatically recognized and the appropriate controller structure with the corresponding optimum parameter set is determined. **Features** • Universal control system for single and double-acting actuators • Integrated diagnostic functions for valve monitoring • Automatic initialization of the position and process controller by means of TUNE-Function • Ultra dynamic actuating system without internal control air consumption. • Illuminated graphic display with keypad • PROFIBUS DP-V1, DeviceNet, EtherNet/IP, PROFINET, Modbus TCP, Bürkert system bus (büS) • Compact and robust design • Adaptation acc. to IEC 534 - 6 or VDI/VDE 3845 for lift and swivel drives or as remote version on Bürkert process valves **Customer benefits** • Quick and easy commissioning • Intuitive and simple operation via graphic display with backlight and keypad. • Guaranteed reliability and scheduled maintenance thanks to valve monitoring and diagnostics. • Easy maintenance and process monitoring • Long service life

DTS 1000450597 EN Version: - Status: RL (released | freigegeben | validé) printed: 21.12.2020

DTS 1000450597 EN Version: - Status: RL (released | freigegeben | validé) printed: 21.12.2020

Positioner SideControl Remote

Positioner Type 8792 ▸ with Remote Sensor Type 8798 ▸ Actuator size Ø 70/90/130 mm	Description
	The intelligent digital position/process controller Type 8792 is designed for attachment to lift and swivel drives with standardization according to IEC 534-6 or VDI/VDE 3845 for demanding control tasks. The Type 8798 version with remote position sensor is used to control Bürkert process control valves. It is operated via a backlit graphic display. The initialization of process and positioner can be done automatically by means of TUNE-Function. **Features** • Illuminated graphic display with touch screen • Universal control system for single and double-acting actuators • Ultra dynamic actuating system without internal control air consumption. • Integrated diagnostic functions for valve monitoring • PROFIBUS DP-V1, DeviceNet, EtherNet/IP, PROFINET, Modbus TCP, Bürkert system bus (büS) • Compact and robust design • Adaptation acc. to IEC 534-6 or VDI/VDE 3845 for lift and swivel drives or as remote version on Bürkert process valves **Customer benefits** • Quick and easy commissioning • Intuitive and simple operation via backlit graphic display and keypad. • Guaranteed reliability and scheduled maintenance thanks to valve monitoring and diagnostics. • Long service life

Positioner SideControl BASIC Remote

Positioner Type 8791 ▸ with Remote Sensor Type 8798 ▸ Actuator size Ø 70/90/130 mm	Description
	The positioner Type 8791 is designed for mounting on lift or swivel drives with standardization in accordance with IEC 534-6 or VDI/VDE 3845 designed for simple control tasks. The variant with the remote sensor Type 8798 is used to control Bürkert process control valves. All operating elements are located inside the housing. **Features** • Simple design • Universal control system for single and double-acting actuators • Ultra dynamic positioning system without air consumption in steady state • Adaptation according to IEC 534-6 or VDI/VDE 3845 for lift and swivel drives or as remote version on Bürkert process valves • AS-Interface, IO-Link, Bürkert system bus (büS) (only for Positioner Type 8791 BASIC Remote) **Customer benefits** • Quick and easy commissioning • Simple device for simple control tasks • Low energy consumption
Positioner IP20 Type 8791 ▸ with Remote Sensor Type 8798 ▸ Actuator size Ø 70/90/130 mm	

DTS 1000450597 EN Version: - Status: RL (released | freigegeben | validé) printed: 21.12.2020

Control head	
Type 8691 ▸ **Actuator size Ø 70/90/130 mm**	**Description**
	The control heads, Type 8691 and 8695, are optimized for integrated mounting on process valves of the 21XX series. The valve position is detected without contact via an analog sensor element, which automatically detects and stores the valve end positions during commissioning using the Teach-In function. The integrated pilot valve controls single or double-acting actuators. The switching status of the valve is indicated by coloured high-performance LEDs. **Features** • Status indication via coloured high-power LEDs • Non-wearing inductive position sensor • Pilot valve with manual override • Teach-In function for automatic recognition of the valve end positions • Hygienic stainless steel design • Easy to clean chemical resistant housing according to IP65/67, 4X rating • AS-Interface, DeviceNet, IO-Link, Bürkert system bus (büS) **Customer benefits** • Simple and safe commissioning by means of Teach-In function • Easy process monitoring and fault detection through visible coloured high-power LEDs • High degree of system availability due to increased actuator service life by means of spring chamber ventilation • Minimal space requirement in the plant piping for more flexibility in plant design
Type 8695 ▸ **Actuator size Ø 50 mm**	

Pneumatic Control unit/Position feedback	
Type 8690 ▸ **Actuator size Ø 70/90/130 mm**	**Description**
	The pneumatic control units, Type 8690 and 8697, are optimized for integrated mounting on process valves of the 21XX series. Mechanical or inductive limit switches detect the valve position. The integrated pilot valve controls single or double-acting (Type 8690) actuators. **Features** • Optical position indicator • Mechanical or inductive proximity switches for end position detection • Pilot valve with manual override • Compact design • Easy to clean, chemical resistant housing according to IP65/67, 4X rating • Optional intrinsically safe design according to ATEX/IECEx **Customer benefits** • Simple and safe commissioning using the Teach-In function (Type 8697) • Signal reliability due to the automatic adjustment of the limit position switches • Minimal space requirement in the plant piping for more flexibility in plant design
Type 8697 ▸ **Actuator size Ø 50 mm**	

7. Networking and combination with other Bürkert products

7.1. Possible combinations for ELEMENT control valve system Type 8802-DF with TopControl

The **continuous ELEMENT valve system, Type 8802-DF**, consists of a **diaphragm valve, Type 2103**, and a digital electropneumatic **positioner, Type 8692** (for valve actuator size Ø 70/90/130 mm), a digital electropneumatic **process controller, Type 8693** (for valve actuator size Ø 70/90/130 mm), a basic digital electropneumatic **positioner, Type 8694** (for valve actuator size Ø 70/90/130 mm) or a digital electropneumatic **positioner, Type 8696** (for valve actuator size Ø 50 mm).

Note:

- You order two components and receive a completely assembled and tested valve.

Example:

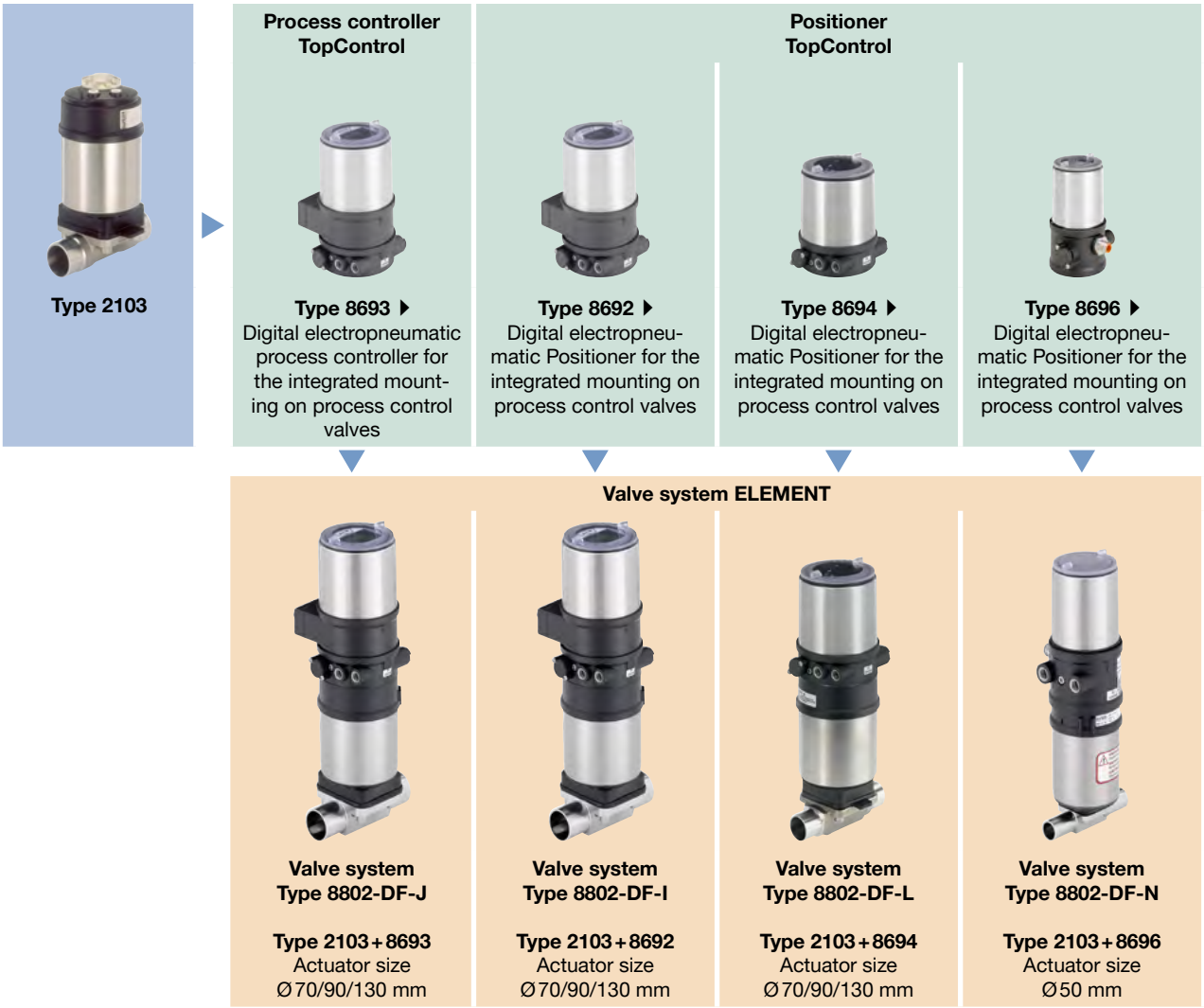

DTS 1000450597 EN Version: - Status: RL (released | freigegeben | validé) printed: 21.12.2020

7.2. Possible combinations for control valve system ELEMENT Type 8802-DF with SideControl Remote

The **continuous ELEMENT valve system, Type 8802-DF** with **SideControl**, consists of a **diaphragm valve, Type 2103** and a digital electropneumatic **SideControl process controller Type 8793** (for valve actuator size Ø70/90/130 mm) or a digital electropneumatic **SideControl positioner Type 8792/8791** (for valve actuator size Ø70/90/130 mm). The SideControls can only be used in combination with the position measuring system Type 8798.

Note:

- You order two components and receive a completely assembled and tested valve.

Example:

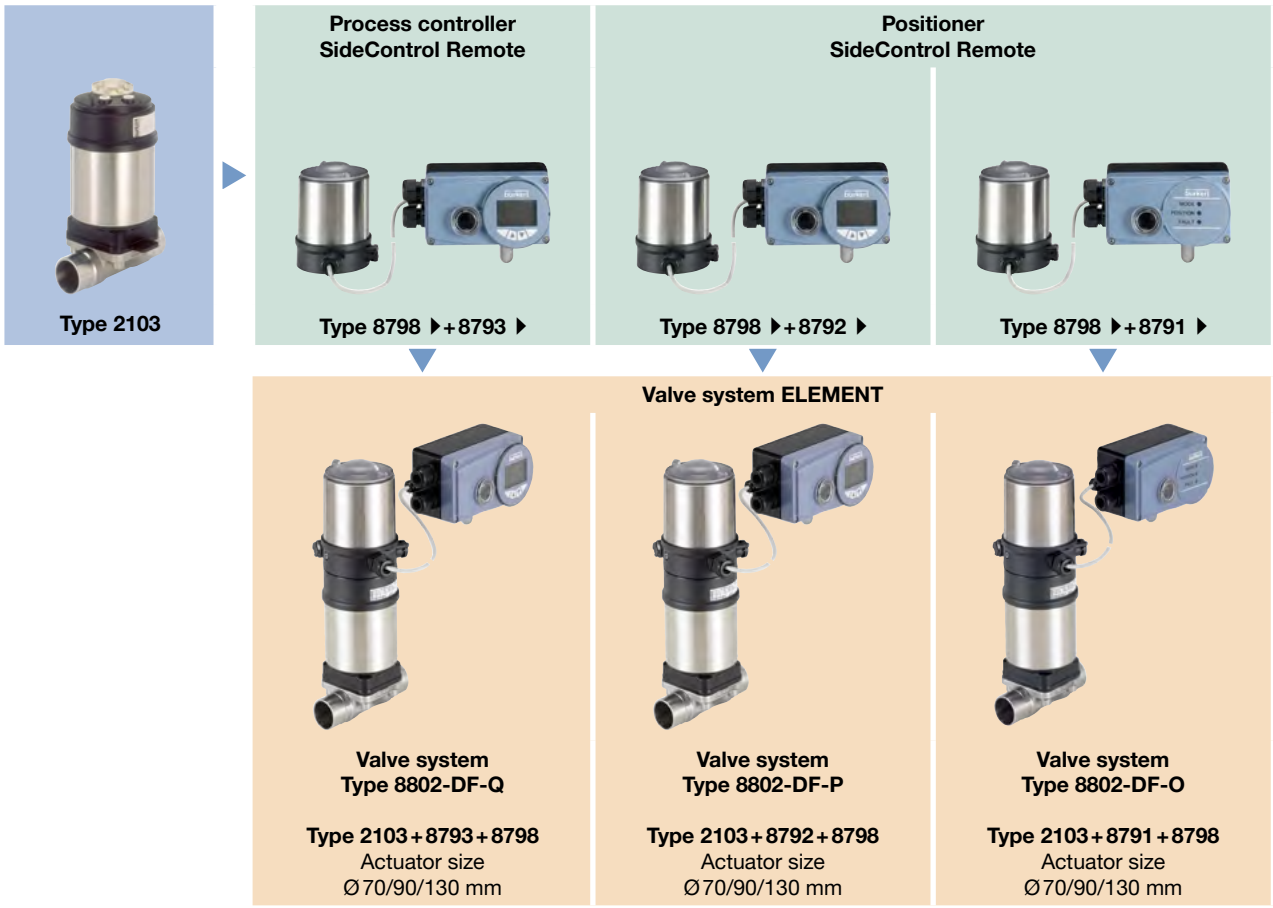

DTS 1000450597 EN Version: - Status: RL (released | freigegeben | validé) printed: 21.12.2020

7.3. Possible combinations for ELEMENT control valve system Type 8801-DF with control head or pneumatic control unit/position feedback

A decentralized automated **valve system On/Off ELEMENT, Type 8801-DF,** consists of a **diaphragm valve Type 2103** and a valve **control head Type 8691/8695** or a pneumatic **control unit Type 8690/8697**.

Note:

- You order two components and receive a completely assembled and tested valve.

Example:

Type 2103

Control head

Type 8691
Control head for decentralised automation of ELEMENT process valves

Type 8695
Control head for decentralised automation of ELEMENT process valves

Pneumatic control unit

Type 8690
Pneumatic control for decentralised automation of ELEMENT process valves

Type 8697
Pneumatic control for decentralised automation of ELEMENT process valves

Valve system On/Off ELEMENT

Valve system
Type 8801-DF-H

Type 2103 + 8691
Actuator size
Ø 70/90/130 mm

Valve system
Type 8801-DF-M

Type 2103 + 8695
Actuator size
Ø 50 mm

Valve system On/Off ELEMENT

Valve system
Type 8801-DF-K

Type 2103 + 8690
Actuator size
Ø 70/90/130 mm

Valve system
Type 8801-DF-U

Type 2103 + 8697
Actuator size
Ø 50 mm

DTS 1000450597 EN Version: - Status: RL (released | freigegeben | validé) printed: 21.12.2020

8. Ordering information

8.1. Bürkert eShop – Easy ordering and quick delivery

Bürkert eShop – Easy ordering and fast delivery

You want to find your desired Bürkert product or spare part quickly and order directly? Our online shop is available for you 24/7. Sign up and enjoy all the benefits.

Order online now

8.2. Bürkert product filter

Bürkert product filter – Get quickly to the right product

You want to select products comfortably based on your technical requirements? Use the Bürkert product filter and find suitable articles for your application quickly and easily.

Try out our product filter

8.3. Bürkert product enquiry form

Bürkert product enquiry form: Would you like to make a specific product enquiry based on your technical requirements? Please use our product enquiry form **at the end of this data sheet**. There you will find all the information relevant to your Bürkert contact person that will help us to process your enquiry in the best possible way.

Bürkert specification key: In our product enquiry form you will find a complete explanation of the composition of our specification key. You will find our product enquiry form **at the end of this data sheet**.

DTS 1000450597 EN Version: - Status: RL (released | freigegeben | validé) printed: 21.12.2020

Bürkert – Close to You

For up-to-date addresses
please visit us at
www.burkert.com

DTS 1000450597 EN Version: - Status: RL (released | freigegeben | validé) printed: 21.12.2020

Credits, © and concept: Christian Bürkert GmbH & Co. KG | Photographs: Marc Eggimann Fotografie - 4051 Basel | Scanner GmbH - Werbeagentur Künzelsau - 74653 Künzelsau

bürkert

Product Enquiry Form - Diaphragm valve with globe valve, T-valve or tank bottom valve

Thank you for your interest in our products! In order to provide you with optimum advice, please fill out the following form and send it to your **Bürkert representative** or e-mail address: info@burkert.com. All information submitted will of course be kept strictly confidential.

Please fill in the **required fields**! *

***Note:** The interactive functions of this PDF may be restricted depending on the PDF reader used.

Personal Information			
Company		**Contact person**	
Customer no.		**Department**	
Street		**Postcode / Town**	
Telephone no.		**Email**	

Delivery
Required delivery date

Operating data	
Process medium	
Medium	Liquid Steam Gas CIP SIP
Medium temperature	T_{med}
Medium pressure	P_{med}

Valve data				
Surface quality (valid for stainless steel)	Standard: Ra 0.5 internal	Ra 0.38 e-pol internal	Plastic	
	Non standard: internal	external		
Body material				
Body design	2 way valve	T-valve	Tank bottom valve	
Seal material	EPDM	PTFE	GYLON®	others
Nominal diameter	DN			
Pilot pressure	min.	max.		
Connection	**Weld end**	EN ISO 1127 / ISO 4200 DIN 11866 R. B	DIN 11850 DIN 11866 R. A	ASME BPE DIN 11866 R. C
	Clamp connection	DIN 32676 R. B (ISO tube (ISO4200))	DIN 32676 R. A (DIN tube (DIN11850))	ASME BPE
	Plastic	Flange	Threated	Spigot
	Others			

Article no. (if known)

Are you interested in ordering a complete Valve System Open/Close or Continuous?
For more information on Valve Systems Open/Close or Continuous, please visit our **Website** ▸.

Additional Requirements / Comment

Send form Delete form

DTS 1000450597 EN Version: - Status: RL (released | freigegeben | validé) printed: 21.12.2020

Visit this product area on the website ▸

© Christian Bürkert GmbH & Co. KG, subject to change

Specification key

Note:

- Please fill out this Product Inquiry Form as completely as possible!
- For more information on Valve Systems Open/Close or Continuous, please visit our **Website** ▸.
- See **Specification key - Examples** how to fill in the specification key.

		Quantity	Type	Control function	Nominal diameter diaphragm	Diaphragm material	Body material	Port connection	Port connection	Actuator version	Actuator size	Pilot air port	Actuator		Variable	Variable	Variable
Key Feature			TYP	SF	DN	DWST	WKST	LTA1	LTA2	ANTA	ANTG	STLA	ANTR	*	VAR1	VAR2	VAR3
Key No. →			**1**	**2**	**3**	**4**	**5**	**6**	**6**	**7**	**8**	**9**	**10**		**V1**	**V2**	**V3**
1	**Selection →**													*			
	Comments																
2	**Selection →**													*			
	Comments																
3	**Selection →**													*			
	Comments																
4	**Selection →**													*			
	Comments																
5	**Selection →**													*			
	Comments																
6	**Selection →**													*			
	Comments																

Send form Delete form

DTS 1000450597 EN Version: - Status: RL (released | freigegeben | validé) printed: 21.12.2020

© Christian Bürkert GmbH & Co. KG, subject to change

Specification key - Examples

2 way diaphragm valve

Type 2030 ▸
CLASSIC with plastic body

Type 2031 ▸
CLASSIC with stainless steel body

Type 2063 ▸
INOX with stainless steel body

Type 2103 ▸
ELEMENT with stainless steel or plastic body

Type 3232 ▸
Manually operated with plastic body

Type 3233 ▸
Manually operated with stainless steel body

T-diaphragm valve

Type 2032 ▸
CLASSIC T-valve

Type 2064 ▸
INOX T-valve

Type 2104 ▸
ELEMENT T-valve

Type 3234 ▸
Manually operated T-valve

Tank bottom diaphragm valve

Type 2033 ▸
CLASSIC
Tank bottom valve

Type 2065 ▸
INOX
Tank bottom valve

Type 2105 ▸
ELEMENT
Tank bottom valve

Type 3235 ▸
Manually operated tank bottom valve

	Type	Control function	Nominal diameter diaphragm	Diaphragm material	Body material	Port connection	Port connection	Actuator version	Actuator size	Pilot air port	Actuator		Variable	Variable	Variable
Key Feature	TYP	SF	DN	DWST	WKST	LTA1	LTA2	ANTA	ANTG	STLA	ANTR	*	VAR1	VAR2	VAR3
Key No. →	**1**	**2**	**3**	**4**	**5**	**6**	**6**	**7**	**8**	**9**	**10**		**V1**	**V2**	**V3**
2 way diaphragm valve															
Type 2030 CLASSIC	2030	A	20.0	AD	PV	KM26	–	C	E	–	–				
Type 2031 CLASSIC	2031	A	20.0	AD	VS	SA93	–	C	E	–	–		NK52	NO14	
Type 2063 INOX	2063	A	20.0	AD	VS	SA93	–	H	M	–	–		NK52	NO14	
Type 2103 ELEMENT	2103	A	20.0	AD	PV	KM26	–	G	M	FA01	–				
Type 2103 ELEMENT	2103	A	20.0	AD	VS	SA93	–	G	M	FA01	–		NK52	NO14	
Type 3232	3232	–	20.0	AD	PV	KM26	–	–	–	–	D050				
Type 3233	3233	–	20.0	AD	VS	SA93	–	–	–	–	D051		NK52	NO14	
T-diaphragm valve															
Type 2032 CLASSIC	2032	A	20.0	AD	VH	SODH	SA93	D	E	–	–		NK52	NO14	
Type 2064 INOX	2064	A	20.0	AD	VH	SODH	SA93	–	M	–	–		NK52	NO14	
Type 2104 ELEMENT	2104	A	20.0	AD	VH	SODH	SA93	–	M	FA01	–		NK52	NO14	
Type 3234	3234	–	20.0	AD	VH	SODH	SA93	–	–	–	D050		NK52	NO14	
Tank bottom diaphragm valve															
Type 2033 CLASSIC	2033	A	20.0	AD	VH	SA93	–	D	F	–	–		NK52	NO14	
Type 2065 INOX	2065	A	20.0	AD	VH	SA93	–	–	M	–	–		NK52	NO14	
Type 2105 ELEMENT	2105	A	20.0	AD	VH	SA93	–	–	M	FA01	–		NK52	NO14	
Type 3235	3235	–	20.0	AD	VH	SA93	–	–	–	–	D050		NK52	NO14	

1.) NK52, NOxx only for stainless steel bodies

DTS 1000450597 EN Version: - Status: RL (released | freigegeben | validé) printed: 21.12.2020

© Christian Bürkert GmbH & Co. KG, subject to change

Key Legend

Note:

- Other versions on request
- Available Type sizes see corresponding data sheet

Key no. 2: Control function (SF)	
A	Closed with spring force
B	Open with spring force
I	Without pressure spring

Key no. 3: Nominal diameter diaphragm (DN)			
8	25	50	100
15	32	65	
20	40	80	

Key no. 4: Diaphragm material (DWST)	
AD	EPDM
EA	PTFE/EPDM
EU	Advanced PTFE/EPDM laminated
ER	Gylon®/EPDM laminated

Key no. 5: Body material (WKST)	
PD	PVDF (Polyvinylidene fluoride)
PP	PP (Polypropylene)
PV	PVC-U (Polyvinyl chloride)
VG	Stainless steel precision casting 1.4435/316L
VH	Stainless steel block material 1.4435/316L
VI	Stainless steel block material 1.4435 BN2/316L ASME BPE
VP	Stainless steel tube 1.4435 BN2/316L
VS	Stainless steel-forged 1.4435 BN2/316L ASME BPE

Key no. 6: Port connection (LTA1, LTA2)
Listed in detail below

Key no. 7: Actuator version (ANTA)	
C	PA actuator (only CLASSIC)
D	PPS actuator (only CLASSIC)
G	ELEMENT design actuator (only ELEMENT)
H	St. St. actuator (only INOX)

Key no. 8: Actuator size (ANTG)	
B	ø 32
C	ø 40
D	ø 50
E	ø 63
F	ø 80
G	ø 100
H	ø 125
K	ø 175
L	ø 225
M	ø 70
N	ø 90
P	ø 130

Key no. 9: Pilot air port (ELEMENT) (STLA)	
FA01	Pilot air port Push-In 6/4, ¼"
FA02	Pilot air port G⅛
FA03	Interface ELEMENT control

Key no. 10: Actuator (ANTR)	
D050	Handwheel and attachment PPS
D051[1.)]	Handwheel PPS and attachment St. St.
D052[2.)]	Handwheel and attachment St. St.

1.) Alternatively D058

2.) Alternatively D059 or D102

Key no. V1, V2, ...: Variable code (VAR1, VAR2, VAR3)	
NK52[3.)]	Acceptance test certificate 3.1 according to EN 10204
NO14[3.)]	Mechanically polished Ra ≤ 0.5 µm (ASME BPE SF1)
NO17[3.)]	Electropolished Ra ≤ 0.38 µm (ASME BPE SF4 / DIN HE4)
NO06[3.)]	Mechanically polished Ra ≤ 0.76 µm (ASME BPE SF3 / DIN H2)
NO16[3.)]	Electropolished Ra ≤ 0.6 µm (ASME BPE SF6)
EC04	Reduced spring force

3.) NK52, NOxx only for stainless steel bodies

Key no. 6: Port connection (LTA)

Weld connection								
DN [mm]	**EN ISO 1127 / ISO 4200 DIN 11866 R. B**	**SMS 3008**	**DIN 11850 R. 0**	**DIN 11850 R. 1**	**DIN 11850 R. 2 DIN 11866 R. A**	**DIN 11850 R. 3**	**BS4825**	**ASME BPE DIN 11866 R. C**
4	–	–	SC40-6.0×1.0	–	–	–	–	–
6	SA78-10.2×1.6	–	SC41-8.0×1.0	–	–	–	–	SA89-3.17×0.56
8	SA40-13.5×1.6	–	SC42-10.0×1.0	–	–	–	SODB-6.35×1.2	SA90-6.35×0.89
10	SA41-17.2×1.6	–	–	SF40-12.0×1.0	SD40-13.0×1.5	SE40-14.0×2.0	SODC-9.53×1.2	SA91-9.53×0.89
15	SA42-21.3×1.6	SA58-12.0×1.0	SC43-18.0×1.5	SF41-18.0×1.0	SD42-19.0×1.5	SE42-20.0×2.0	SODD-12.7×1.2	SA92-12.7×1.65
20	SA43-26.9×1.6	SA59-18.0×1.0	SC44-22.0×1.5	SF42-22.0×1.0	SD43-23.0×1.5	SE43-24.0×2.0	SODE-19.05×1.2	SA93-19.05×1.65
25	SA44-33.7×2.0	SA60-25.0×1.2	SC45-28.0×1.5	SF43-28.0×1.0	SD44-29.0×1.5	SE44-30.0×2.0	–	SODF-25.4×1.65
32	SA45-42.4×2.0	SA61-33.7×1.2	SC46-34.0×1.5	SF44-34.0×1.0	SD45-35.0×1.5	SE45-36.0×2.0	–	–
40	SA46-48.3×2.0	SA62-38.0×1.2	SC47-40.0×1.5	SF45-40.0×1.0	SD46-41.0×1.5	SE46-42.0×2.0	–	SODH-38.1×1.65
50	SA47-60.3×2.0	SA63-51.0×1.2	SC48-52.0×1.5	SF46-52.0×1.0	SD47-53.0×1.5	SE47-54.0×2.0	–	SODI-50.8×1.65
65	SA48-76.1×2.0	SA64-63.5×1.6	–	–	SD48-70.0×2.0	–	–	SODJ-63.5×1.65
80	SA49-88.9×2.3	SA65-76.1×1.6	–	–	SD49-85.0×2.0	–	–	SODK-76.2×1.65
100	SA39-114.3×2.3	SA66-101.6×2.0	–	–	SD50-104.0×2.0	–	–	SODL-101.6×2.11

DTS 1000450597 EN Version: - Status: RL (released | freigegeben | validé) printed: 21.12.2020

© Christian Bürkert GmbH & Co. KG, subject to change

Clamp connection					
DN [mm]	**Clamp 34,0 similar to DIN 32676 R. B (ISO tube (ISO4200))**	**DIN 32676 R. A (DIN tube (DIN11850))**	**DIN 32676 R. B (ISO tube (ISO4200))**	**ASME BPE**	**BS 4825 (Clamp BS 4825-3, tube BS 4825-1)**
8	TC51-13.5×1.6 Cl: 34.0	TD40-10.0×1.0 Cl: 25.0	TC40-13.5×1.6 Cl: 25.0	TG 50-6.35×0.89 Cl: 25.0	–
10	TC41-17.2×1.6 Cl: 34.0	TD41-13.0×1.5 Cl: 34.0	TC53-17.2×1.6 Cl: 25.0	TG 01-9.53×0.89 Cl: 25.0	–
15	TC42-21.3×1.6 Cl: 34.0	TD42-19,,0×1.5 Cl: 34.0	TC52-21.3×1.6 Cl: 50.5	TG 02-12.7×1.65 Cl: 25.0	TH42-12.7×1.2 Cl: 25.0
20	–	TD43-23.0×1.5 Cl: 34.0	TC43-26.9×1.6 Cl: 50.5	TG 03-19.05×1.65 Cl: 25.0	TH43-19.05×1.2 Cl: 25.0
25	–	TD44-29.0×1.5 Cl: 50.5	TC44-33.7×2.0 Cl: 50.5	TG 04-25.4×1.65 Cl: 50.5	–
32	–	–	–	–	–
40	–	TD46-41.0×1.5 Cl: 50.5	TC46-48.3×2.0 Cl: 64.0	TG 05-38.1×1.65 Cl: 50.5	–
50	–	TD47-53.0×1.5 Cl: 64.0	TC47-60.3×2.0 Cl: 77.5	TG 06-50.8×1.65 Cl: 64.0	–
65	–	–	TC48-76.1×2.0 Cl: 91.0	TG 07-63.5×1.65 Cl: 77.5	–
80	–	–	TC49-88.9×2.3 Cl: 106.0	TG 08-76.2x,65 Cl: 91.0	–
100	–	–	TC50-114.3×2.3 Cl: 130.0	TG 09-101.6×2.11 Cl: 119.0	–

Plastic connection					
DN [mm]	**Welded connection socket (only WKST=PD, PP)**	**Welded connection threated socket (only WKST=PD, PP)**	**Adhesive bond socket (only WKST=PV)**	**Adhesive bond threated socket (only WKST=PV)**	**Loose-type flange (up to DN65) Fixed flange (from DN80)**
15	SS25 - ø20	SM25 - ø20	KS25 - ø20	KM25 - ø20	FL24
20	SS26 - ø25	SM26 - ø25	KS26 - ø25	KM26 - ø25	FL25
25	SS27 - ø32	SM27 - ø32	KS27 - ø32	KM27 - ø32	FL26
32	SS28 - ø40	SM28 - ø40	KS28 - ø40	KM28 - ø40	FL27
40	SS29 - ø50	SM29 - ø50	KS29 - ø50	KM29 - ø50	FL28
50	SS30 - ø63	SM30 - ø63	KS30 - ø63	KM30 - ø63	FL29
65	–	–	–	–	FL30
80	–	–	–	–	FF31
100	–	–	–	–	FF32

DTS 1000450597 EN Version: - Status: RL (released | freigegeben | validé) printed: 21.12.2020

© Christian Bürkert GmbH & Co. KG, subject to change