DATA SHEET

Type 2651
Flange

bürkert
FLUID CONTROL SYSTEMS







2/2 way Flanged Ball Valve in stainless steel, 2 pieces, DN 15...DN 200

- Low torques
- Maintenance friendly
- High flow rate
- Anti-Static
- ISO 5211 head flange

Product variants described in the data sheet may differ from the product presentation and description.

Can be combined with



Type 2051 ▸
Pneumatic actuator



Type 2052 ▸
Electrical actuator



Type 3003 ▸
Electrical actuator



Type 3004 ▸
Electrical actuator



Type 3005 ▸
Electrical actuator



Type 1061 ▸
Position feedback

Type description

2/2 way Flanged Ball Valves in stainless steel used for separating medium flow. The ball valves are equipped with a manual lever. However, they can be connected via the mechanical interface (acc. to ISO 5211) with pneumatic (for example, Type 2051, Type 2052, Type 2053) and electrical rotary actuators (for example, Type 3003, Type 3004, Type 3005), too. The final position of pneumatically actuated ball valves can be checked via the position feedback box Type 1061. Next to this, the valves are available with different standardized face-to-face dimensions (EN 558-1 series 1; EN 558-1 series 27).

DTS 1000361184 EN Version: C Status: RL (released | freigegeben | validé) printed: 21.10.2020

© Christian Bürkert GmbH & Co. KG, Subject to alteration

Visit product website ▸

Table of contents

1. General Technical Data 3

2. Materials 3

2.1. Chemical Resistance Chart – Bürkert resistApp....3
2.2. Material specifications....4
DN 15…DN 100....4
DN 125…DN 200....5

3. Dimensions 6

3.1. DIN Flange acc. EN 1091-1 & EN 558-1 series 27 - F4 (DN 15…100) | F5 (DN 125…200)....6
3.2. DIN Flange acc. EN 1091-1 & EN 558-1 series 1 - F1....7
3.3. ANSI/ASME B16.5 Class 150....8
3.4. ANSI/ASME B16.5 Class 300....9

4. Performance specifications 10

4.1. Pressure temperature diagram....10
4.2. Torques....10
4.3. Nominal flow....10

5. Ordering information 10

5.1. Bürkert eShop – Easy ordering and quick delivery....10
5.2. Bürkert product filter....11
5.3. Ordering chart DIN Flange acc. EN 1091-1 & EN 558-1 series 27 - F4 (DN 15…100) | F5 (DN 125…200)....11
5.4. Ordering chart DIN Flange acc. EN 1091-1 & EN 558-1 series 1 - F1....11
5.5. Ordering chart ANSI/ASME B16.5 Class 150....11
5.6. Ordering chart ANSI/ASME B16.5 Class 300....11

DTS 1000361184 EN Version: C Status: RL (released | freigegeben | validé) printed: 21.10.2020

1. General Technical Data

Product properties	
Dimensions	Detailed information can be found in chapter “3. Dimensions” on page 6.
Material	
Body	Stainless steel 1.4408
Ball	Stainless steel 1.4401
Shaft	Stainless steel 1.4401
Seal	PTFE (Ball seal) FKM (Selector shaft seal)
Nominal diameter	DN 15…200
Face-to-face length	DN 15…DN 100: F4 (EN 558-1 series 27) or F1 (EN 558-1 series 1) DN 125…DN 200: F5 (EN 558-1 series 27)
Medium data	
Medium	Stainless steel body: aggressive media which do not attack the body and seal material
Medium temperature	-10 °C…200 °C (see “4.1. Pressure temperature diagram” on page 10)
Medium pressure	16 bar, 40 bar (see “4.1. Pressure temperature diagram” on page 10) Max. 6 bar for steam with graphite reinforced PTFE seal (option)
Process/Port connection & communication	
Port connection	DIN Flange acc. EN 1092-1 ANSI Flange acc. ANSI/ASME B16.5
Approvals and Certificates	
ISO head flange	EN ISO 5211

2. Materials

2.1. Chemical Resistance Chart – Bürkert resistApp

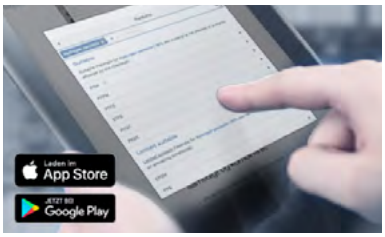

Bürkert resistApp – Chemical Resistance Chart

You want to ensure the reliability and durability of the materials in your individual application case? Verify your combination of media and materials on our website or in our resistApp.

Start Chemical Resistance Check

DTS 1000361184 EN Version: C Status: RL (released | freigegeben | validé) printed: 21.10.2020

2.2. Material specifications

DN 15...DN 100

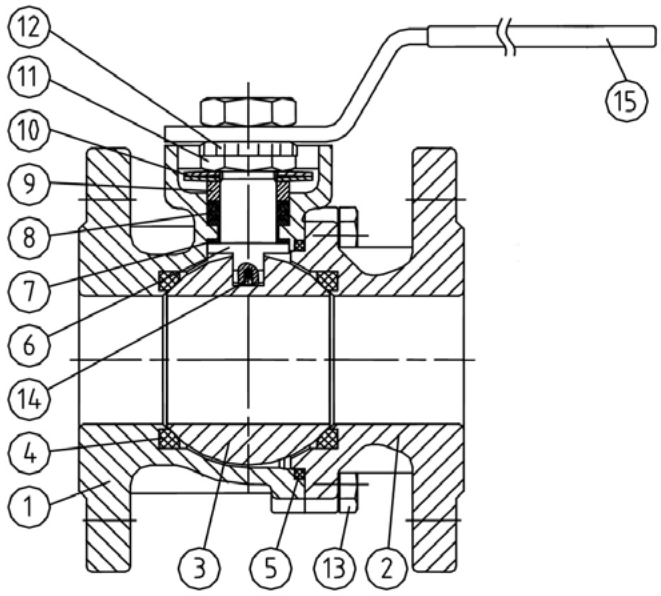

No.	Element	Quantity	Material
1	Body	1	1.4408
2	Body II (DN 15…DN 100), End cap (DN 125…DN 200)	1	1.4408
3	Ball	1	1.4401
4	Ball seal	2	PTFE reinforced
5	Body seal	1	PTFE
6	Stem	1	1.4401
7	Bearing	1	PTFE reinforced
8	Stem packing	1 Set	PTFE / PTFE conductive
9	Thrust washer	1	1.4401
10	Spring	2	1.4310
11	Stem nut	1	A2 - 70
12	Lock washer	1	1.4301
13	Hex bolt	1	1.4308
14	Anti-static-ball	1	A4 - 70 (DN 15…DN 100), A2 - 70 (DN 125…DN 200)
15	Manual lever	1	1.4301 (with plastic cover) (DN 15…DN 100), 14308 (DN 125…DN 200)

DTS 1000361184 EN Version: C Status: RL (released | freigegeben | validé) printed: 21.10.2020

DN 125…DN 200

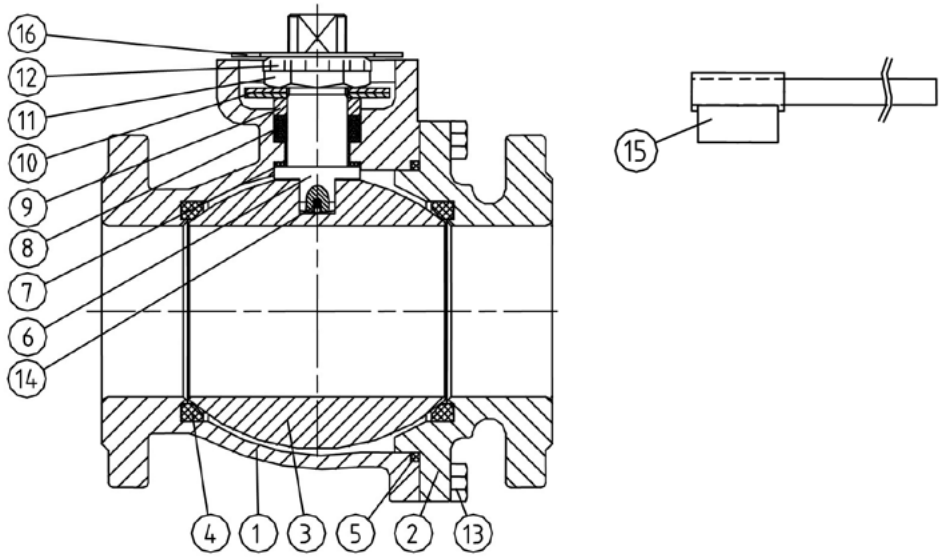

No.	Element	Quantity	Material
1	Body	1	1.4408
2	Body II (DN 15…DN 100), End cap (DN 125…DN 200)	1	1.4408
3	Ball	1	1.4401
4	Ball seal	2	PTFE reinforced
5	Body seal	1	PTFE
6	Stem	1	1.4401
7	Bearing	1	PTFE reinforced
8	Stem packing	1 Set	PTFE / PTFE conductive
9	Thrust washer	1	1.4401
10	Spring	2	1.4310
11	Stem nut	1	A2 - 70
12	Lock washer	1	1.4301
13	Hex bolt	1	1.4308
14	Anti-static-ball	1	A4 - 70 (DN 15…DN 100), A2 - 70 (DN 125…DN 200)
15	Manual lever	1	1.4301 (with plastic cover) (DN 15…DN 100), 14308 (DN 125…DN 200)
16	Stop plate	1	1.4401

DTS 1000361184 EN Version: C Status: RL (released | freigegeben | validé) printed: 21.10.2020

3. Dimensions

3.1. DIN Flange acc. EN 1091-1 & EN 558-1 series 27 - F4 (DN 15...100) | F5 (DN 125...200)

Note:
Dimensions in mm

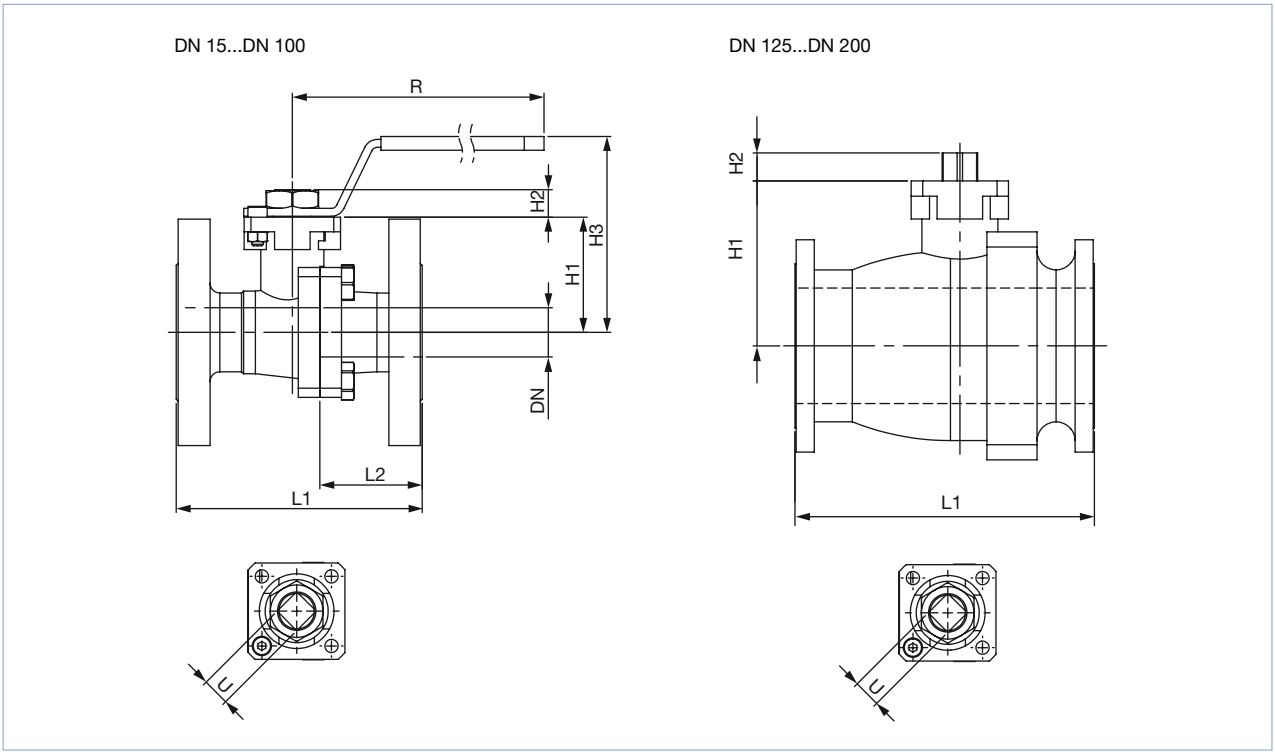

Note:
① Number of Flange Drillings - PN 16
② Number of Flange Drillings - PN 40

DN	L1	L2	H1	H2	H3	R	ISO 5211	U	①	②	Weight PN 16	Weight PN 40	Article no.	
[mm]											[kg]	[kg]	PN 16	PN 40
15	115	48.5	50	11	92	180	F05	11	4	4	–	2.7	–	772143
20	120	51.5	53.5	11	95.5	180	F05	11	4	4	–	3.4	–	772144
25	125	52	58.5	14	100.5	180	F05	14	4	4	–	4.4	–	772145
32	130	57	71	14	113	180	F05	14	4	4	–	5.6	–	772146
40	140	59	76	17	122.5	300	F07	17	4	4	–	8.1	–	772147
50	150	62	83.5	17	130	300	F07	17	4	4	–	10.7	–	772148
65	170	72	95	17	141.5	300	F07	17	4	8	13.8	14.5	772152	772149
80	180	71.2	113	22	194.5	400	F10	22	8	8	19.6	20.7	772153	772150
100	190	75.5	131	22	212.5	400	F10	22	8	8	26.7	29.7	772154	772151
125	325	–	151.5	22	–	700	F10	22	8	8	45	50	293779	293786
150	350	–	217	37	–	700	F14	36	8	8	70	75	293780	293787
200	400	–	252	37	–	700	F14	36	8	8	120	125	293781	293788

DTS 1000361184 EN Version: C Status: RL (released | freigegeben | validé) printed: 21.10.2020

3.2. DIN Flange acc. EN 1091-1 & EN 558-1 series 1 - F1

Note:
Dimensions in mm

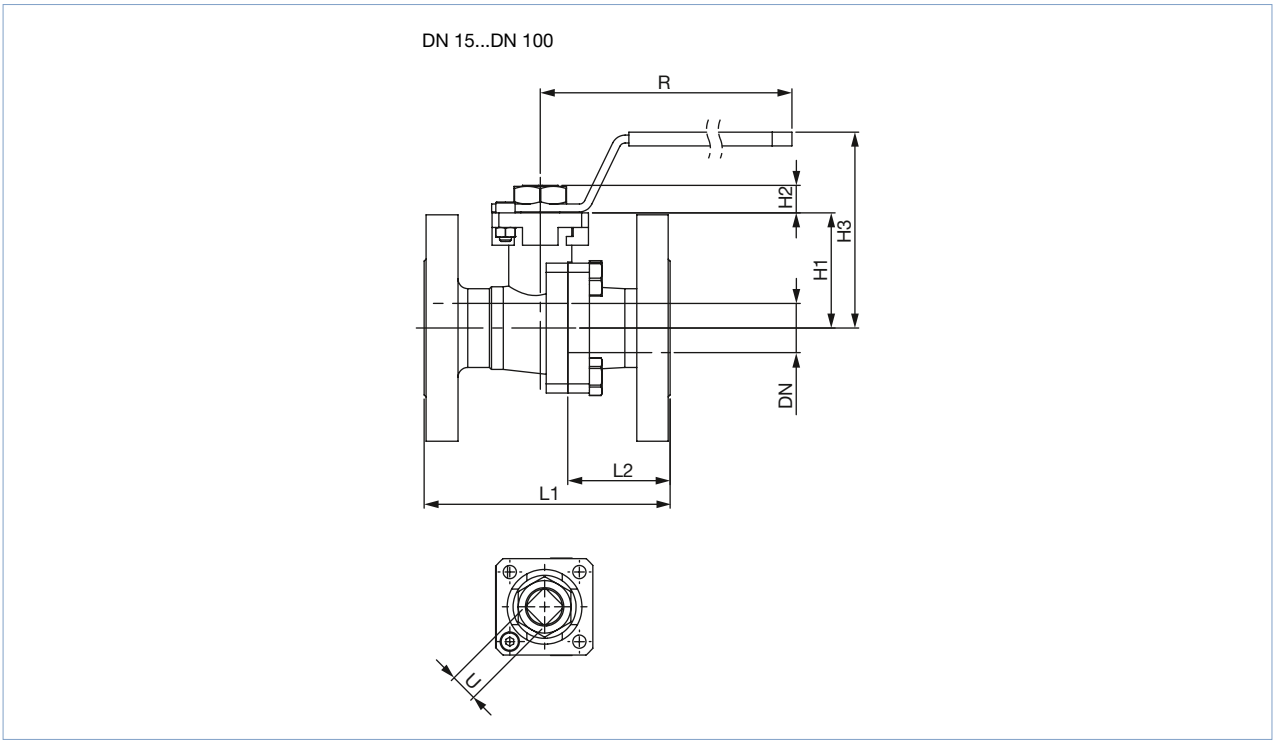

Note:
① Number of Flange Drillings - PN 16
② Number of Flange Drillings - PN 40

DN	L1	L2	H1	H2	H3	R	ISO 5211	U	①	②	Weight PN 16	Weight PN 40	Article no.	
[mm]											[kg]	[kg]	PN 16	PN 40
15	130	63.5	50	11	92	180	F05	11	4	4	–	2.7	–	772161
20	150	81.5	53.5	11	95.5	180	F05	11	4	4	–	3.5	–	772162
25	160	87	58.5	14	100.5	180	F05	14	4	4	–	4.5	–	772163
32	180	107	71	14	113	180	F05	14	4	4	–	6	–	772164
40	200	119	76	17	122.5	300	F07	17	4	4	–	8.6	–	772165
50	230	142	83.5	17	130	300	F07	17	4	4	–	11.5	–	772166
65	290	192	95	17	141.5	300	F07	17	4	8	15.3	16.1	772170	772167
80	310	201.2	113	22	194.5	400	F10	22	8	8	21.5	22.6	772171	772168
100	350	235.5	131	22	212.5	400	F10	22	8	8	30.4	33.4	772172	772169

DTS 1000361184 EN Version: C Status: RL (released | freigegeben | validé) printed: 21.10.2020

3.3. ANSI/ASME B16.5 Class 150

Note:
Dimensions in mm

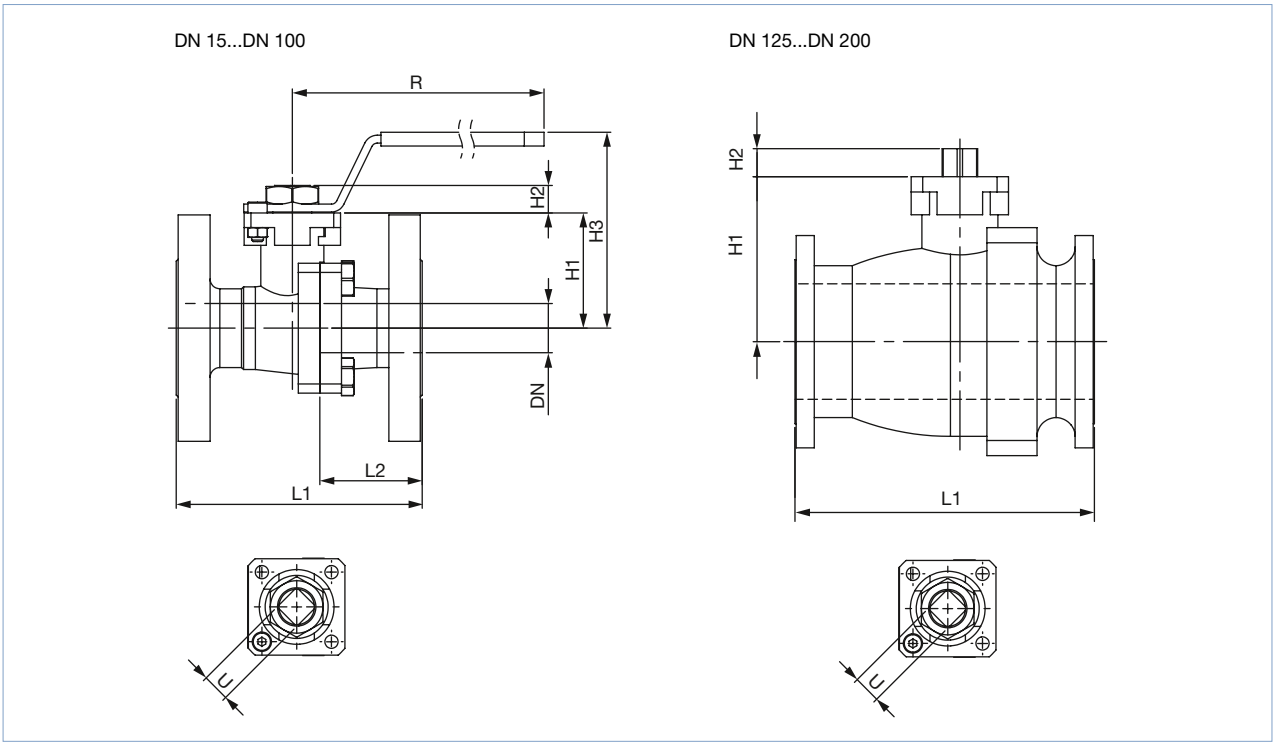

DN [mm]	L1	L2	H1	H2	H3	R	ISO 5211	U	Flange Drillings [Quantity]	Weight [kg]	Article no.
15	108	41.5	50	11	92	180	F05	11	4	2	772173
20	117	48.5	53.5	11	92.5	180	F05	11	4	2.5	772174
25	127	54	58.5	14	100.5	180	F05	14	4	3.4	772175
32	140	67	71	14	113	180	F05	14	4	4.7	772176
40	165	84	76	17	122.5	300	F07	17	4	7.2	772177
50	178	90	83.5	17	130	300	F07	17	4	10	772178
65	190.5	92.5	95	17	141.5	300	F07	17	4	14.7	772179
80	203	94.2	113	22	194.5	400	F10	22	4	20.4	772180
100	229	114.5	131	22	212.5	400	F10	22	4	31.3	772181
125	325	–	151.5	22	–	700	F10	22	8	52	293774
150	394	–	217	37	–	700	F14	36	8	74	293775
200	457	–	252	37	–	700	F14	36	8	100	293776

DTS 1000361184 EN Version: C Status: RL (released | freigegeben | validé) printed: 21.10.2020

3.4. ANSI/ASME B16.5 Class 300

Note:
Dimensions in mm

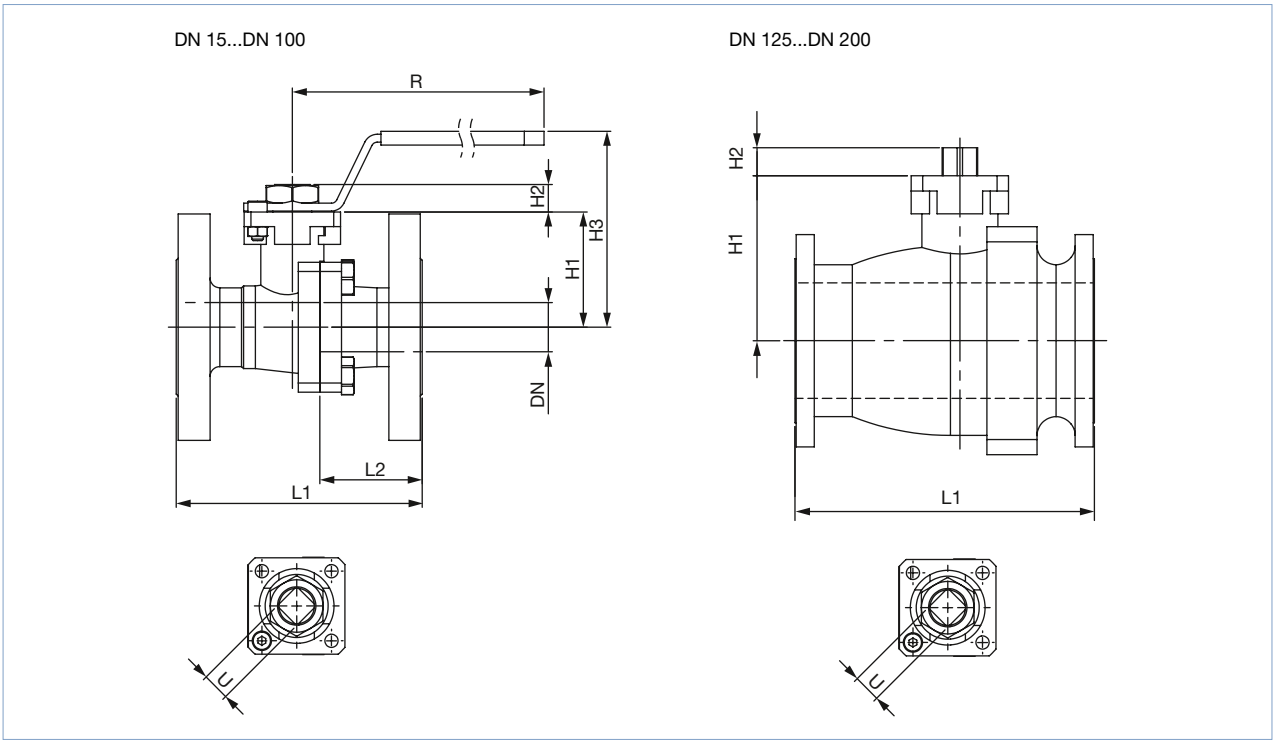

DN [mm]	L1	L2	H1	H2	H3	R	ISO 5211	U	Flange Drillings [Quantity]	Weight [kg]	Article no.
15	140	73.5	50	12	92	180	F05	11	4	2.5	772182
20	152	83.5	58.7	11	97.7	180	F05	11	4	3.6	772183
25	165	92	62	14	104	180	F05	14	4	4.5	772184
32	178	105	71	15	117	180	F05	14	4	6.1	772185
40	190	109	78	15	124.5	300	F07	17	4	9.7	772186
50	216	128	84.5	17.5	135	300	F07	17	8	11.6	772187
65	241	143	95.5	16.5	142	300	F07	17	8	17	772188
80	282.5	173.7	113	22	198.5	400	F10	22	8	25.1	772189
100	305	190.5	131	23.5	216.5	400	F10	22	8	43.1	772190
150	403	–	217	37	–	700	F14	36	8	124	293777
200	502	–	252	37	–	700	F14	36	8	180	293778

DTS 1000361184 EN Version: C Status: RL (released | freigegeben | validé) printed: 21.10.2020

4. Performance specifications

4.1. Pressure temperature diagram

For general industrial use

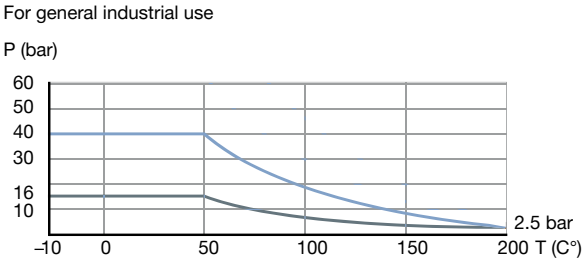

4.2. Torques

Note:
The values were measured under the following conditions: Max. Δp, ambient temperature, medium: water

Torques - for ball valves with a PN 16 pressure rating												
DN [mm]	15	20	25	32	40	50	65	80	100	125	150	200
Torque [Nm]	12	14	18	32	42	57	83	120	183	441	583	688
Torque [Nm]	10	12	16	29	30	38	69	80	122	299	384	456

Torques - for ball valves with a PN 40 pressure rating												
DN [mm]	15	20	25	32	40	50	65	80	100	125	150	200
Torque [Nm]	18	24	42	63	81	120	210	293	390	882	1166	1376
Torque [Nm]	16	21	40	55	57	80	160	195	260	598	768	912

4.3. Nominal flow

Note:
The nominal flow K_{VS} acc. VDI/VDE 2173 indicates the flow in cubic meters per hour, at Δp=1 bar and +15 °C.

Nominal flow – K_V value [m³/h]												
DN [mm]	15	20	25	32	40	50	65	80	100	125	150	200
K_{VS} [mm]	19.4	45.6	71.5	105	170	275	507	905	1414	2362	3674	7155

5. Ordering information

5.1. Bürkert eShop – Easy ordering and quick delivery



Bürkert eShop – Easy ordering and fast delivery

You want to find your desired Bürkert product or spare part quickly and order directly? Our online shop is available for you 24/7. Sign up and enjoy all the benefits.

Order online now

DTS 1000361184 EN Version: C Status: RL (released | freigegeben | validé) printed: 21.10.2020

5.2. Bürkert product filter



Bürkert product filter – Get quickly to the right product

You want to select products comfortably based on your technical requirements?
Use the Bürkert product filter and find suitable articles for your application quickly and easily.

Try out our product filter

5.3. Ordering chart DIN Flange acc. EN 1091-1 & EN 558-1 series 27 - F4 (DN 15…100) | F5 (DN 125…200)

Note:
Detailed information can be found in chapter “3.1. DIN Flange acc. EN 1091-1 & EN 558-1 series 27 - F4 (DN 15…100) | F5 (DN 125…200)” on page 6.

5.4. Ordering chart DIN Flange acc. EN 1091-1 & EN 558-1 series 1 - F1

Note:
Detailed information can be found in chapter “3.2. DIN Flange acc. EN 1091-1 & EN 558-1 series 1 - F1” on page 7.

5.5. Ordering chart ANSI/ASME B16.5 Class 150

Note:
Detailed information can be found in chapter “3.3. ANSI/ASME B16.5 Class 150” on page 8.

5.6. Ordering chart ANSI/ASME B16.5 Class 300

Note:
Detailed information can be found in chapter “3.4. ANSI/ASME B16.5 Class 300” on page 9.

DTS 1000361184 EN Version: C Status: RL (released | freigegeben | validé) printed: 21.10.2020

Bürkert – Close to You

For up-to-date addresses
please visit us at
www.burkert.com



DTS 1000361184 EN Version: C Status: RL (released | freigegeben | validé) printed: 21.10.2020

Credits, © and concept: Christian Bürkert GmbH & Co. KG | Photographs: Marc Eggimann Fotografie - 4051 Basel | Scanner GmbH - Werbeagentur Künzelsau - 74653 Künzelsau