SIEMENS

SIPART

Electropneumatic positioners SIPART PS2 (6DR5...)

Compact Operating Instructions

Introduction 1

Safety instructions 2

Installing/mounting 3

Connecting 4

Commissioning 5

Service and maintenance 6

Technical data 7

Product documentation and support A

Sealing plug / thread adapter B

6DR5...
With and without HART
With PROFIBUS PA
With FOUNDATION Fieldbus

02/2024
A5E03436620-AH

Legal information

Warning notice system

This manual contains notices you have to observe in order to ensure your personal safety, as well as to prevent damage to property. The notices referring to your personal safety are highlighted in the manual by a safety alert symbol, notices referring only to property damage have no safety alert symbol. These notices shown below are graded according to the degree of danger.

⚠ DANGER
indicates that death or severe personal injury **will** result if proper precautions are not taken.

⚠ WARNING
indicates that death or severe personal injury **may** result if proper precautions are not taken.

⚠ CAUTION
indicates that minor personal injury can result if proper precautions are not taken.

NOTICE
indicates that property damage can result if proper precautions are not taken.

If more than one degree of danger is present, the warning notice representing the highest degree of danger will be used. A notice warning of injury to persons with a safety alert symbol may also include a warning relating to property damage.

Qualified Personnel

The product/system described in this documentation may be operated only by **personnel qualified** for the specific task in accordance with the relevant documentation, in particular its warning notices and safety instructions. Qualified personnel are those who, based on their training and experience, are capable of identifying risks and avoiding potential hazards when working with these products/systems.

Proper use of Siemens products

Note the following:

⚠ WARNING
Siemens products may only be used for the applications described in the catalog and in the relevant technical documentation. If products and components from other manufacturers are used, these must be recommended or approved by Siemens. Proper transport, storage, installation, assembly, commissioning, operation and maintenance are required to ensure that the products operate safely and without any problems. The permissible ambient conditions must be complied with. The information in the relevant documentation must be observed.

Trademarks

All names identified by ® are registered trademarks of Siemens Aktiengesellschaft. The remaining trademarks in this publication may be trademarks whose use by third parties for their own purposes could violate the rights of the owner.

Disclaimer of Liability

We have reviewed the contents of this publication to ensure consistency with the hardware and software described. Since variance cannot be precluded entirely, we cannot guarantee full consistency. However, the information in this publication is reviewed regularly and any necessary corrections are included in subsequent editions.

Siemens Aktiengesellschaft
Digital Industries
Postfach 48 48
90026 NÜRNBERG
GERMANY

Document order number: A5E03436620
Ⓟ 02/2024 Subject to change

Copyright © Siemens 2022 - 2024.
All rights reserved

Table of contents

1 Introduction ... 7

1.1 Purpose of this documentation ... 7

1.2 Product compatibility ... 8

1.3 Designated use ... 9

1.4 Checking the consignment ... 10

1.5 Manufacturer nameplate ... 11

1.6 Explosion protection nameplate: 6DR5..0, 6DR5..1, 6DR5..2, 6DR5..3 ... 12

1.7 Explosion protection nameplate 6DR5..5, 6DR5..6 ... 13

1.8 Cybersecurity information ... 14

1.9 Transportation and storage ... 15

1.10 Notes on warranty ... 16

2 Safety instructions ... 17

2.1 Precondition for use ... 17

2.2 Warning symbols on the device ... 18

2.3 Laws and directives ... 19

2.4 Conformity with European directives ... 20

2.5 Product approval and UL compliance ... 21

2.6 Improper modifications ... 22

2.7 Use in areas subject to explosion hazard ... 23

3 Installing/mounting ... 25

3.1 Basic safety instructions ... 25

3.1.1 Proper mounting ... 27

3.2 Mounting to linear actuator ... 28

3.3 Mounting to part-turn actuator ... 29

3.4 Installing option modules ... 30

3.4.1 Internal NCS module ... 31

4 Connecting ... 33

4.1 Basic safety instructions ... 33

4.1.1 Additional safety notes for PA and FF ... 37

4.2 Electrical connection ... 38

4.2.1 SIPART PS2 with 4 to 20 mA/HART ... 38

4.2.2 SIPART PS2 with PROFIBUS PA ... 40

4.2.3 SIPART PS2 with FOUNDATION Fieldbus ... 40

4.2.4 Split range ... 41
4.2.5 Option modules ... 41
4.2.5.1 Digital I/O Module (DIO) 6DR4004-6A / -8A ... 41
4.2.5.2 Analog Output Module (AOM) 6DR4004-6J / -8J ... 41
4.2.5.3 Inductive Limit Switches (ILS) 6DR4004-6G / -8G ... 42
4.2.5.4 Mechanic Limit Switches (MLS) 6DR4004-6K ... 42
4.2.6 Option device version M12 connector ... 43
4.2.6.1 In the basic unit with 4 to 20 mA/HART ... 44
4.2.6.2 In the basic unit with PROFIBUS PA ... 44
4.2.6.3 In the basic unit with FOUNDATION Fieldbus ... 44
4.2.6.4 In the basic unit with Analog Output Module (AOM) 6DR4004-6J / -8J (-Z D53) ... 45
4.2.6.5 In the basic unit with Position Transmitter (-Z D54) ... 45
4.2.6.6 In the basic unit with Digital I/O Module (DIO) 6DR4004-6A / -8A (-Z D55) ... 45
4.2.6.7 In the basic unit with Inductive Limit Switches (ILS) 6DR4004-6G /-8G (-Z D56) ... 46
4.2.6.8 In the basic unit with Mechanic Limit Switches (MLS) 6DR4004-6K (-Z D57) ... 46

4.3 Pneumatic connection ... 47
4.3.1 Pneumatic connection for 6DR5..0/1/2/3 ... 47
4.3.2 Pneumatic connection for 6DR5..5 and 6DR5..6 ... 48

4.4 Restrictors ... 49

5 Commissioning ... 51

5.1 Basic safety instructions ... 51

5.2 Overview ... 54

5.3 Sequence of automatic initialization ... 55

5.4 Parameter ... 56

5.5 Purge air switching ... 58

5.6 Commissioning linear actuators ... 59
5.6.1 Preparing linear actuators for commissioning ... 59
5.6.2 Automatic initialization of linear actuators ... 60
5.6.3 Manual initialization of linear actuators ... 62

5.7 Commissioning part-turn actuators ... 63
5.7.1 Preparing part-turn actuators for commissioning ... 63
5.7.2 Automatic initialization of part-turn actuators ... 64
5.7.3 Manual initialization of part-turn actuators ... 65

5.8 Canceling initialization ... 66

6 Service and maintenance ... 67

6.1 Basic safety instructions ... 67
6.1.1 Maintenance ... 67

6.2 Cleaning ... 68
6.2.1 Positioners 6DR5..0, 6DR5..3 and 6DR5..5 ... 68
6.2.2 Positioners 6DR5..1, 6DR5..2 and 6DR5..6 ... 69

6.3 Maintenance and repair work ... 70

6.4 Return procedure ... 71

6.5 Disposal ... 72

7 Technical data ... 73

7.1 All device versions ... 73
7.1.1 Rated conditions ... 73
7.1.2 Pneumatic data ... 74
7.1.3 Construction ... 75
7.1.4 Controller ... 76
7.1.5 Natural gas as actuator medium ... 77
7.1.6 Certificates and approvals ... 78
7.1.6.1 Safety information for explosion protection ... 78
7.1.6.2 Improper modifications ... 83
7.1.6.3 Special conditions for use in hazardous areas ... 85
7.1.6.4 Type designation ... 86
7.1.6.5 Permissible options for hazardous areas ... 87
7.1.6.6 Markings for explosion protection ... 88
7.1.6.7 Ambient temperature in hazardous areas ... 91
7.1.6.8 Maximum permissible electric characteristic values ... 93

7.2 With 4 to 20 mA/HART ... 112
7.2.1 Electrical data ... 112
7.2.2 Electrical data for pressure sensor module ... 113
7.2.3 Communication (HART) ... 113

7.3 With PROFIBUS PA / with FOUNDATION Fieldbus ... 114
7.3.1 Electrical data ... 114
7.3.2 PROFIBUS PA communication ... 115
7.3.3 FOUNDATION Fieldbus communication ... 115

7.4 Option modules ... 116
7.4.1 Digital I/O Module (DIO) 6DR4004-6A / -8A ... 116
7.4.2 Analog Output Module (AOM) 6DR4004-6J / -8J ... 117
7.4.3 Analog Input Module (AIM) 6DR4004-6F / -8F ... 117
7.4.4 Inductive Limit Switches (ILS) 6DR4004-6G / -8G ... 118
7.4.5 Mechanic Limit Switches (MLS) 6DR4004-6K ... 118
7.4.6 Internal NCS module 6DR4004-5L / 6DR4004-5LE ... 119
7.4.7 External position detection ... 119
7.4.7.1 Rated conditions for external position detection ... 119
7.4.7.2 External NCS sensors 6DR4004-6N / -8N ... 120
7.4.7.3 Position Transmitter (Potentiometer) 6DR4004-1ES ... 121
7.4.7.4 Position Transmitter (NCS) 6DR4004-2ES ... 121
7.4.7.5 Position Transmitter (NCS, ILS) 6DR4004-3ES ... 122
7.4.7.6 Position Transmitter (NCS, MLS) 6DR4004-4ES ... 122

7.5 SITRANS AW050 Bluetooth adapter ... 124

A Product documentation and support ... 125

A.1 Product documentation ... 125

A.2 Technical support ... 126

B Sealing plug / thread adapter ... 127

B.1 Intended use of accessory part ... 127

B.2 Safety information for accessory part ... 128

B.3 IECEx/ATEX ... 129

B.4 Technical specifications for accessory part 130
B.5 Dimension drawings for accessory part 131
Index 133

Introduction 1

1.1 Purpose of this documentation

These instructions are a brief summary of important features, functions and safety information, and contain all information required for safe use of the device. Read the instructions carefully prior to installation and commissioning. In order to use the device correctly, first review its principle of operation.

The instructions are aimed at persons who install and commission the device.

To realize optimum performance from the device, read the complete operating instructions.

See also

SIPART PS2 product information (http://www.siemens.com/sipartps2)

1.2 Product compatibility

The following tables describe the compatibility of the manual edition, firmware, device revision, electronic device description (EDD) and SIEMENS Device Manager software.

HART

Manual edition, note	Firmware (FW)	Device revision	Electronic Device Description (EDD)	Device Manager software, compatible version
02/2024: New device features	5.05.00	8	25.00.00	• SIEMENS SIMATIC PDM Version 9.0 or higher • SIEMENS SITRANS DTM Version 4.x • SIEMENS SITRANS Mobile IQ Version 4.02 or higher (Bluetooth)
11/2022: New device features	5.04.00	8	25.00.00	• SIEMENS SIMATIC PDM Version 9.0 or higher • SIEMENS SITRANS DTM Version 4.x
	5.03.00			
11/2021: New manual edition 09/2020: New device features	5.02.00/01	7	24.00.00	
	5.01.00	6	23.00.00	
	5.00.00	5	22.00.00	

PROFIBUS PA

Manual edition, note	Firmware (FW)	Electronic Device Description (EDD)	Device Manager software, compatible version
02/2024: New manual edition	6.01.00	23.00.00	• SIEMENS SIMATIC PDM Version 9.0 or higher • SIEMENS SITRANS DTM Version 4.x
11/2022: New manual edition			
11/2021: New manual edition			
09/2020: New device features			

FOUNDATION Fieldbus

Manual edition, note	Firmware (FW)	Device revision	Electronic Device Description (EDD)	Device Manager software, compatible version
02/2024: New manual edition	3.01.00	3	4.00.00	SIEMENS SITRANS DTM Version 4.x
11/2022: New manual edition				
11/2021: New manual edition				
09/2020: New device features				

1.3 Designated use

Use the device in accordance with the information on the nameplate and in the Technical data (Page 73).

1.4 Checking the consignment

1. Check the packaging and the delivered items for visible damages.
2. Report any claims for damages immediately to the shipping company.
3. Retain damaged parts for clarification.
4. Check the scope of delivery by comparing your order to the shipping documents for correctness and completeness.

WARNING

Using a damaged or incomplete device

Risk of explosion in hazardous areas.

- Do not use damaged or incomplete devices.

1.5 Manufacturer nameplate

Example

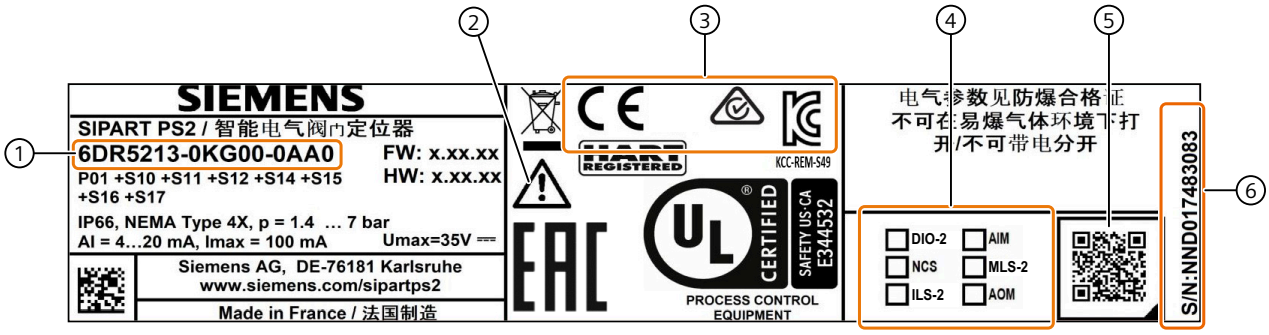

1. Article number and order suffix (order code)
2. Follow operating instructions
3. Conformity with country-specific directives
4. Built-in option modules
5. QR code to the mobile website with device-specific product information
6. Serial number

1.6 Explosion protection nameplate: 6DR5..0, 6DR5..1, 6DR5..2, 6DR5..3

Example

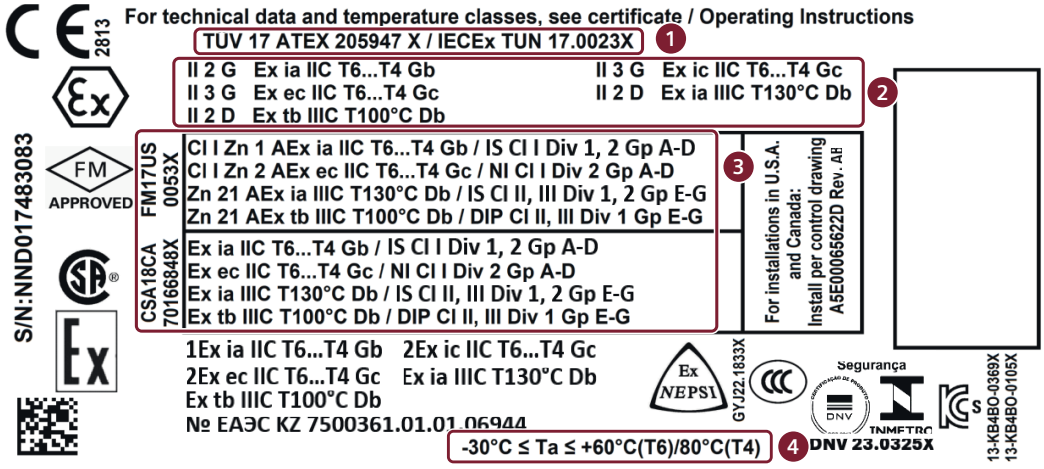

① Approvals

② ATEX/IECEx/INMETRO marking for hazardous areas

③ FM/CSA marking for hazardous area

④ Permissible ambient temperature for operation in hazardous areas

1.7 Explosion protection nameplate 6DR5..5, 6DR5..6

Example

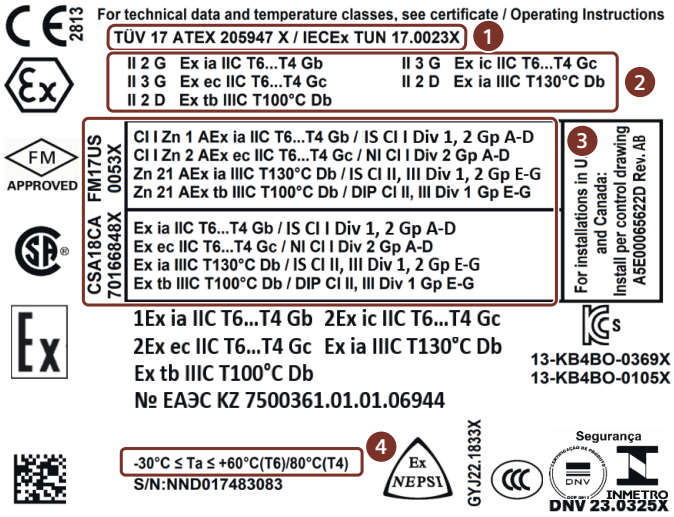

① Approvals

② ATEX/IECEx/INMETRO marking for hazardous areas

③ FM/CSA marking for hazardous area

④ Permissible ambient temperature for operation in hazardous areas

1.8 Cybersecurity information

Siemens provides products and solutions with industrial cybersecurity functions that support the secure operation of plants, systems, machines and networks.

In order to protect plants, systems, machines and networks against cyber threats, it is necessary to implement – and continuously maintain – a holistic, state-of-the-art industrial cybersecurity concept. Siemens' products and solutions constitute one element of such a concept.

Customers are responsible for preventing unauthorized access to their plants, systems, machines and networks. Such systems, machines and components should only be connected to an enterprise network or the internet if and to the extent such a connection is necessary and only when appropriate security measures (e.g. firewalls and/or network segmentation) are in place.

For additional information on industrial cybersecurity measures that may be implemented, please visit
https://www.siemens.com/global/en/products/automation/topic-areas/industrial-cybersecurity.html.

Siemens' products and solutions undergo continuous development to make them more secure. Siemens strongly recommends that product updates are applied as soon as they are available and that the latest product versions are used. Use of product versions that are no longer supported, and failure to apply the latest updates may increase customer's exposure to cyber threats.

To stay informed about product updates, subscribe to the Siemens Industrial Cybersecurity RSS Feed under
https://new.siemens.com/global/en/products/services/cert.html.

NOTICE
Unauthorized product information or software Use only authorized Siemens websites when accessing any product information or software, including firmware updates, device integration files (EDD, for example), as well as other product documentation. Using unauthorized product information or software could result in a security incident, such as breach of confidentiality, or loss of integrity and availability of the system. For more information, see Product documentation and support (Page 125).

1.9 Transportation and storage

To guarantee sufficient protection during transport and storage, observe the following:

- Keep the original packaging for subsequent transportation.
- Devices/replacement parts should be returned in their original packaging.
- If the original packaging is no longer available, ensure that all shipments are properly packaged to provide sufficient protection during transport. Siemens cannot assume liability for any costs associated with transportation damages.

NOTICE
Insufficient protection during storage The packaging only provides limited protection against moisture and infiltration. • Provide additional packaging as necessary.

Special conditions for storage and transportation of the device are listed in Technical data (Page 73).

1.10 Notes on warranty

The contents of this manual shall not become part of or modify any prior or existing agreement, commitment or legal relationship. The sales contract contains all obligations on the part of Siemens as well as the complete and solely applicable warranty conditions. Any statements regarding device versions described in the manual do not create new warranties or modify the existing warranty.

The content reflects the technical status at the time of publishing. Siemens reserves the right to make technical changes in the course of further development.

Safety instructions 2

2.1 Precondition for use

This device left the factory in good working condition. In order to maintain this status and to ensure safe operation of the device, observe these instructions and all the specifications relevant to safety.

Observe the information and symbols on the device. Do not remove any information or symbols from the device. Always keep the information and symbols in a completely legible state.

2.2 Warning symbols on the device

Symbol	Explanation
⚠	Consult operating instructions

2.3 Laws and directives

Observe the test certification, provisions and laws applicable in your country during connection, assembly and operation. These include, for example:

- National Electrical Code (NEC - NFPA 70) (USA)
- Canadian Electrical Code (CEC Part I) (Canada)

Further provisions for hazardous area applications are for example:

- IEC 60079-14 (international)
- EN 60079-14 (EU and UK)
- For Korea only:
  이 기기는 업무용(A 급) 전자파 적합기기로서 판매자
  또는 사용자는 이 점을 주의하시기 바라며 가정 외의

  지역에서사용하는 것을 목적으로 합니다

2.4 Conformity with European directives

The CE marking on the device shows conformity with the regulations of the following European guidelines:

Electromagnetic compatibility EMC 2014/30/EU	Directive of the European Parliament and of the Council on the harmonization of the laws of the Member States relating to electromagnetic compatibility.
Atmosphère explosible ATEX 2014/34/EU	Directive of the European Parliament and of the Council on the harmonization of the laws of the Member States relating to equipment and protective systems intended for use in potentially explosive atmospheres.
2011/65/EU RoHS	Directive of the European Parliament and of the Council on the restriction of the use of certain hazardous substances in electrical and electronic equipment

The directives applied can be found in the EU declaration of conformity for the associated device.

2.5 Product approval and UL compliance

Classification according to pressure equipment directive (PED 2014/68/EU)	For fluid group 1 gases; fulfills requirements according to article 4, paragraph 3 (good engineering practice SEP)
EU conformity	The applicable directives and applied standards can be found in the EU declaration of conformity on the Internet.
UL conformity	Conformity has been proven based on US and Canadian safety requirements. For applicable safety requirements, refer to the UL CERTIFICATE OF COMPLIANCE on the Internet at: Certificates (http://www.siemens.com/processinstrumentation/certificates)
Соответствие ТР ТС 012/2011	Изделие соответствует требованиям ТР ТС 012/2011 О безопасности оборудования для работы во взрывоопасных средах

2.6 Improper modifications

WARNING

Improper device modifications

Risk to personnel, system, and environment can result from modifications to the device, particularly in hazardous areas.

- Only carry out modifications that are described in the instructions for the device. Failure to observe this requirement cancels the manufacturer's warranty and the product approvals. Do not operate the device after unauthorized modifications.

WARNING

Improper modification on positioner 6DR5...6

Danger of explosion. The pneumatic terminal plate on the SIPART PS2 positioner 6DR5..6 is a safety-related component of the flameproof enclosure.

- Never loosen the screws ① of the pneumatic terminal plate.

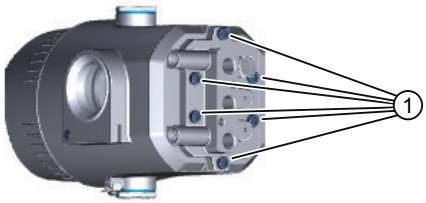

Figure 2-1 Screws of the pneumatic terminal plate on the positioner 6DR5..6

2.7 Use in areas subject to explosion hazard

Qualified personnel for hazardous area applications

Persons who install, connect, commission, operate, and service the device in a hazardous area must have the following specific qualifications:

- They are authorized, trained or instructed in operating and maintaining devices and systems according to the safety regulations for electrical circuits, high pressures, aggressive, and hazardous media.
- They are authorized, trained, or instructed in carrying out work on electrical circuits for hazardous systems.
- They are trained or instructed in maintenance and use of appropriate safety equipment according to the pertinent safety regulations.

WARNING

Use in hazardous area

Risk of explosion.

- Only use equipment that is approved for use in the intended hazardous area and labeled accordingly.
- Do not use devices that have been operated outside the conditions specified for hazardous areas. If you have used the device outside the conditions for hazardous areas, make all Ex markings unrecognizable on the nameplate.

WARNING

Loss of safety of device with type of protection "Intrinsic safety Ex i"

If the device or its components have already been operated in non-intrinsically safe circuits or the electrical specifications have not been observed, the safety of the device is no longer ensured for use in hazardous areas. There is a risk of explosion.

- Connect the device with type of protection "Intrinsic safety" solely to an intrinsically safe circuit.
- Observe the specifications for the electrical data on the certificate and/or in Technical data (Page 73).

Installing/mounting 3

3.1 Basic safety instructions

WARNING

High operating force with pneumatic actuators

Risk of injury when working on control valves due to the high operating force of the pneumatic actuator.

- Please observe the corresponding safety instructions for the pneumatic actuator in use.

WARNING

Lid gasket may be damaged

If the lid gasket is not positioned correctly in the groove of the base plate, it could be damaged when the lid is mounted and screwed tight.

- Therefore, make sure that the lid gasket is seated correctly.

WARNING

Exceeded maximum permissible operating pressure

Risk of injury or poisoning.

The maximum permissible operating pressure depends on the device version, pressure limit and temperature rating. The device can be damaged if the operating pressure is exceeded. Hot, toxic and corrosive process media could be released.

Ensure that maximum permissible operating pressure of the device is not exceeded. Refer to the information on the nameplate and/or in Technical data (Page 73).

WARNING

Electrostatic charging of nameplates

The nameplates used on the device can reach a capacity of 5 pF.

- Keep the device and the cables at a distance from strong electromagnetic fields.

CAUTION

Unsuitable compressed air

Device damage. As a general rule, the positioner must only be operated with dry and clean compressed air.

- Use the customary water separators and filters. An additional dryer is required in extreme cases.
- Use dryers, especially if you operate the positioner at low ambient temperatures.

CAUTION

Adhere to the following instructions before working on the control valve and when attaching the positioner

Danger of injury.

- Prior to working on the control valve, you must move the actuator and the process valve into a completely pressureless state. Proceed as follows:
  - Depressurize the actuator chambers.
  - Switch off the supply pressure PZ.
  - Secure the process valve.
- Make sure that the actuator has reached the pressureless state.
- If you interrupt the supply pressure PZ to the positioner, the pressureless position can only be reached after a certain waiting time.
- When mounting, adhere strictly to the following order to avoid injuries or mechanical damage to the positioner/mounting kit:
  - Mount the positioner mechanically.
  - Electric connection.
  - Connect supply pressure PZ.
  - Commission the positioner.

WARNING

Mechanical impact energy

To ensure the degree of protection of the enclosure (IP66), protect the positioner versions listed below from mechanical impact energy:

- 6DR5..0; polycarbonate enclosure with inspection window: ≤ 1 joule on total enclosure
- 6DR5..1; aluminum enclosure with inspection window: ≤ 2 joules applied to the inspection window
- 6DR5..3; aluminum enclosure with inspection window: ≤ 2 joules applied to the inspection window

NOTICE
Torque with NPT screwed gland Device damage. The maximum torque of the cable gland must not be exceeded. • To avoid damage to the device, the NPT adapter must be held in place while the NPT gland is screwed into the NPT adapter. Refer to the section "Technical specifications > Construction (Page 75)" for the torque value.

3.1.1 Proper mounting

NOTICE
Incorrect mounting The device can be damaged, destroyed, or its functionality impaired through improper mounting. • Before installing ensure there is no visible damage to the device. • Make sure that process connectors are clean, and suitable gaskets and glands are used. • Mount the device using suitable tools. Refer to the information in Construction (Page 75).

NOTICE
Freezing of the exhaust air outlets When devices of the type 6DR5..0/1/2/3 are used, the exhaust air outlets ② may freeze. The function of the device is impaired. • Do **not** install the positioner with the base plate ① pointing up.

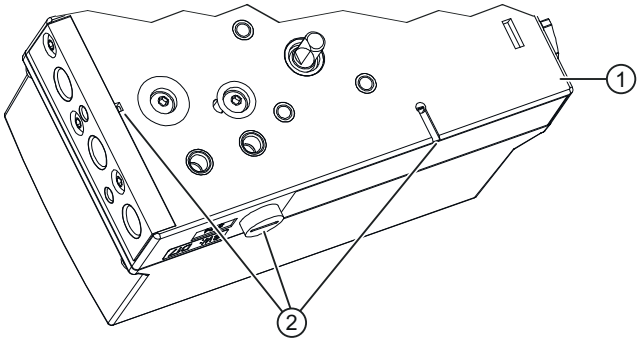

① Base plate
② Exhaust air outlets

Figure 3-1 Exhaust air outlets, base plate

3.2 Mounting to linear actuator

For linear actuators, use the "linear actuator" mounting kit 6DR4004-8V or the integrated attachment.

You require different installation parts depending on the selected actuator type. The mounting kit is suitable for a stroke of 3 to 35 mm. For a larger stroke range, you require a separately ordered lever 6DR4004-8L. Refer to the detailed operating instructions for further information on mounting.

3.3 Mounting to part-turn actuator

You require an actuator-specific VDI/VDE 3845 mount to install the positioner on a part-turn actuator. You receive the mount and screws from the actuator manufacturer. Ensure that the mount has a sheet metal thickness of > 4 mm and reinforcements. You also need the mounting kit 6DR4004-8D or the stainless steel coupling TGX: 16300-1556. Refer to the detailed operating instructions for further information on mounting.

3.4 Installing option modules

NOTICE
Improper installation of option modules Risk of explosion in hazardous areas. • If you upgrade the device with an option module, mark the corresponding box on the nameplate with a cross, as in the example below. • Before you commission the device, follow the safety-related requirements according to the specifications in the valid certificate and in the "Technical specifications" section.

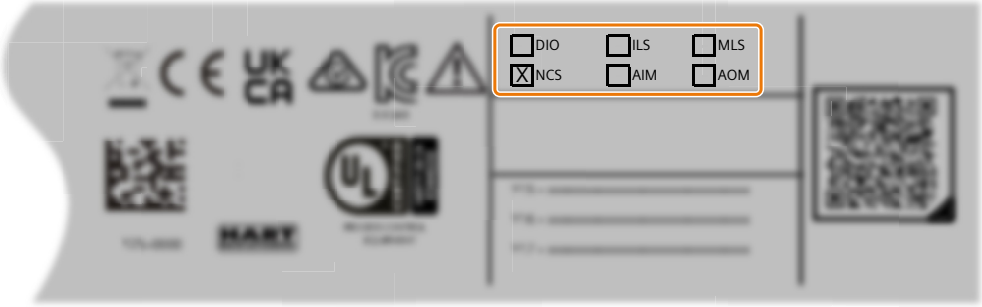

Figure 3-2 Example

Depending on the version of the positioner, the following option modules are available:

- Digital I/O Module (DIO) 6DR4004-6A / -8A
- Analog Input Module (AIM) 6DR4004-6F / -8F
- Inductive Limit Switches (ILS) 6DR4004-6G / -8G
- Analog Output Module (AOM) 6DR4004-6J / -8J
- Mechanic Limit Switches (MLS) 6DR4004-6K
- Internal NCS module 6DR4004-5L / -5LE
- NCS sensor 6DR4004-6N / -8N

For additional information and the corresponding safety notes to be observed when installing the option modules, refer to the detailed operating instructions for your respective device version.

3.4.1 Internal NCS module

The internal NCS module is used for wear-free position detection and is an optional equipment version in the positioner. The internal NCS module is installed as an alternative to the Analog Output Module (AOM) at the same slot in the positioner.

Connecting

4

4.1 Basic safety instructions

WARNING

Lever for position detection

Danger of crushing and shearing with mounting kits which use a lever for position detection. During commissioning and ongoing operation, severing or squeezing of limbs could occur as a result of the lever. Risk of injury when working on control valves due to the high operating force of the pneumatic actuator.

- Do not reach into the range of motion of the lever following mounting of the positioner and mounting kit.

WARNING

With intrinsically device version (Ex i)

Risk of explosion in hazardous areas.

For intrinsically safe device versions only the certified circuits may be connected as auxiliary power supply, control and signal circuits.

- Make sure that the power source of the used circuits is marked as intrinsically safe.

WARNING

Leaky threads for "Flameproof enclosure Ex d / XP" type of protection

Risk of explosion in hazardous areas. Threads must be completely screwed into the enclosure.

- Screw the cable glands, thread adapter or blanking plug with at least 5 thread rotations into the enclosure.

WARNING

Unsuitable cables, cable glands and/or plugs

Risk of explosion in hazardous areas.

- Use only cable glands/plugs that comply with the requirements for the relevant type of protection.
- Tighten the cable glands in accordance with the torques specified in Construction (Page 75).
- Close unused cable inlets for the electrical connections.
- When replacing cable glands, only use cable glands of the same type.
- After installation, check that the cables are seated firmly.

NOTICE

Condensation in the device

Damage to device through formation of condensation if the temperature difference between transportation or storage and the mounting location exceeds 20 °C (36 °F).

- Before taking the device into operation, let the device adapt for several hours in the new environment.

NOTICE

Ambient temperature too high

Damage to cable sheath.

- At an ambient temperature ≥ 60 °C (140 °F), use heat-resistant cables suitable for an ambient temperature at least 20 °C (36 °F) higher.

WARNING

Improper power supply

Risk of explosion in hazardous areas as result of incorrect power supply.

- Connect the device in accordance with the specified power supply and signal circuits. The relevant specifications can be found in the certificates, in Technical data (Page 73) or on the nameplate.

WARNING

Lack of equipotential bonding

Risk of explosion through compensating currents or ignition currents through lack of equipotential bonding.

- Ensure that the device is potentially equalized
- The cable cross-section of the equipotential bonding cable must be greater than or equal to the connecting cable of the electronics

WARNING

Unprotected cable ends

Risk of explosion through unprotected cable ends in hazardous areas.

- Protect unused cable ends in accordance with IEC/EN 60079-14.

WARNING

Improper laying of shielded cables

Risk of explosion through compensating currents between hazardous area and the non-hazardous area.

- Shielded cables that cross into hazardous areas should be grounded only at one end.
- If grounding is required at both ends, use an equipotential bonding conductor.

WARNING

Connecting or disconnecting device in energized state

Risk of explosion in hazardous areas.

- Connect or disconnect devices in hazardous areas only in a de-energized state.
- Install a suitable switch-off device.

Exceptions:

- Devices having the type of protection "Intrinsic safety Ex i" may also be connected in energized state in hazardous areas.

WARNING

Incorrect selection of type of protection

Risk of explosion in areas subject to explosion hazard.

This device is approved for several types of protection.

1. Decide in favor of one type of protection.
2. Connect the device in accordance with the selected type of protection.
3. In order to avoid incorrect use at a later point, make the types of protection that are not used permanently unrecognizable on the nameplate.

NOTICE

Standard cable gland/torque

Device damage.

- Owing the reasons pertaining to tightness (IP enclosure rating) and the required tensile strength, only use the cables having a diameter ≥ 8 mm for standard M20x1.5 cable gland, or use a suitable seal insert in case of smaller diameters.
- In the NPT version, the positioner is delivered with a coupling. When inserting a counter piece in the coupling, ensure that the maximum permissible torque of 10 Nm is not exceeded.

Two-wire mode

NOTICE

Connection of voltage source to current input

Device damage if a voltage source is connected to the current input I_w (terminals 6 and 7).

- Never connect the current input I_w to a low-resistance voltage source, otherwise the positioner may be destroyed.
- Always use a high-impedance power source.
- Observe the static destruction limit specified in the "Electrical data (Page 112)".

Note

Improvement of interference immunity

- Lay signal cables separate from cables with voltages > 60 V.
- Use cables with twisted wires.
- Keep device and cables at a distance from strong electromagnetic fields.
- Take account of the conditions for communication specified in the Technical data (Page 73).
- Use shielded cables to guarantee the full specification according to HART/PA/FF/Modbus/EIA-485/Profibus DP.

4.1.1 Additional safety notes for PA and FF

If the bus shield is fully effective, the interference immunity and the interference emission conform to the specifications. The following measures ensure that the bus shield is fully effective:

- The shields have been connected to the metallic connections of the positioner.
- The shields have been laid up to the terminal boxes, the distributor and the transceiver.

Note

Dissipation of glitch impulses/equipotential bonding

In order to dissipate glitch impulses, the positioner must be connected to an equipotential bonding cable (earth potential) using a low resistance. The positioner in the polycarbonate enclosure is therefore equipped with an additional cable. Connect the this cable to the shield of the bus cable and the equipotential bonding cable using a cable clamp.

Devices in the stainless steel or aluminum enclosure have a corresponding terminal on the outer side of the enclosure. This terminal must also be connected to the equipotential bonding cable.

The positioner is equipped with an additional input (terminal 81 [+] and terminal 82 [-]) to approach the safety position. After activating this function, this input must be continuously supplied with +24 V in order to retain the normal control function.

If the 24-V signal is interrupted, the safety position is set as described in chapter "Pneumatic connection (Page 47)".

Communication with the master is still possible. The "Jumper" on the electronics is used to activate this function. It can be accessed after removing the module cover, and must be switched from the right position (delivery state) to the left position.

4.2 Electrical connection

4.2.1 SIPART PS2 with 4 to 20 mA/HART

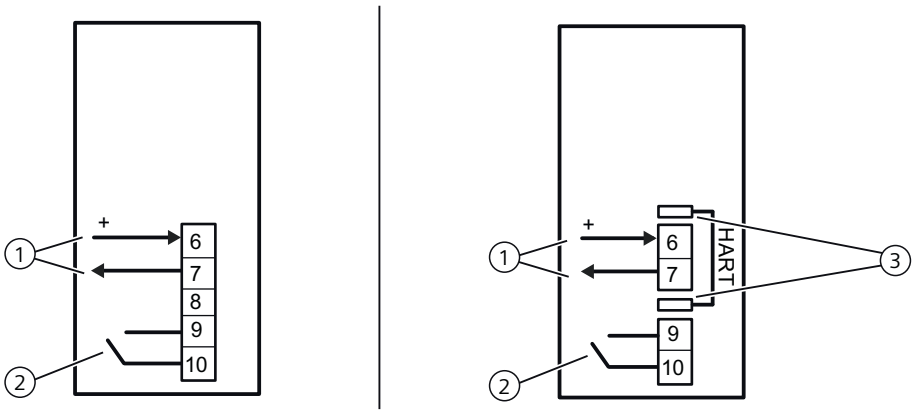

① Setpoint 4 ... 20 mA, terminals 6 and 7
② Digital input DI1, terminals 9 and 10
③ HART connection

Figure 4-1 Connection diagram for electronics, 2-wire

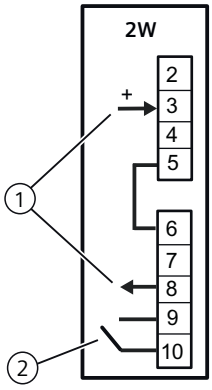

① Setpoint 4 ... 20 mA, terminals 3 and 8
② Digital input DI1, terminals 9 and 10

Figure 4-2 Connection diagram for electronics, 2/3/4-wire, with wiring configuration 2-wire

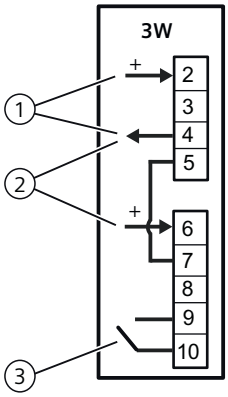

① Power source 18 ... 30 V, terminals 2 and 4
② Setpoint 0/4 ... 20 mA, terminals 6 and 4
③ Digital input DI1, terminals 9 and 10

Figure 4-3 Connection diagram for electronics, 2/3/4-wire, with 3-wire wiring configuration

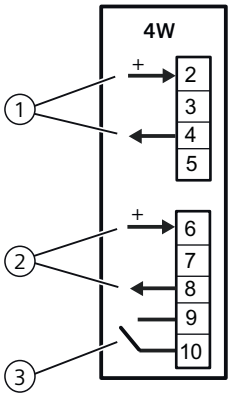

① Power source 18 ... 30 V, terminals 2 and 4
② Setpoint 0/4 ... 20 mA, terminals 6 and 8
③ Digital input DI1

Figure 4-4 Connection diagram for electronics, 2/3/4-wire, with wiring configuration 4-wire

See also

Electrical data (Page 112)
Technical data (Page 73)

4.2.2 SIPART PS2 with PROFIBUS PA

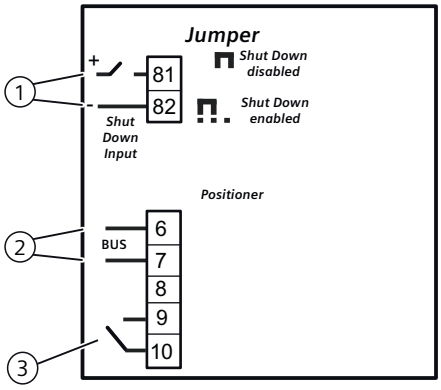

① Input: Safety shutdown, terminals 81 and 82

② Auxiliary power supply bus circuit, terminals 6 and 7

③ Digital input DI, terminals 9 and 10

Figure 4-5 Device version with PROFIBUS PA

See also

Electrical data (Page 114)

4.2.3 SIPART PS2 with FOUNDATION Fieldbus

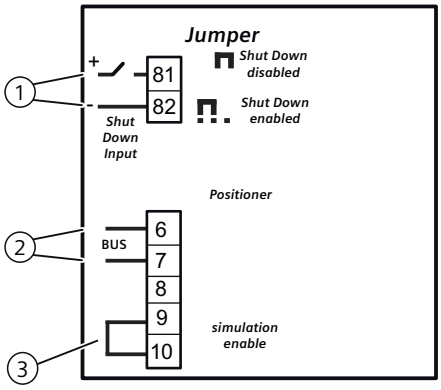

① Input: Safety shutdown can be activated with "jumper", terminals 81 and 82

② Auxiliary power supply bus circuit, terminals 6 and 7

③ Digital input DI, terminals 9 and 10 (simulation release)

Figure 4-6 Device version with FOUNDATION Fieldbus

See also

Electrical data (Page 114)

4.2.4 Split range

For further information about "Split-range" operation, refer to the detailed operating instructions for your respective device version.

4.2.5 Option modules

4.2.5.1 Digital I/O Module (DIO) 6DR4004-6A / -8A

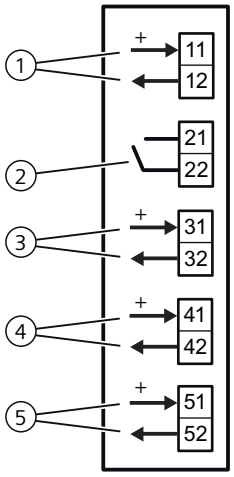

① Digital input 2, galvanically isolated
② Digital input 2, floating contact
③ Fault message output
④ Digital output 1
⑤ Digital output 2

Figure 4-7 Digital I/O Module (DIO)

4.2.5.2 Analog Output Module (AOM) 6DR4004-6J / -8J

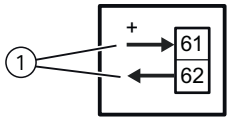

① Analog output AO

Figure 4-8 Analog Output Module (AOM)

4.2.5.3 Inductive Limit Switches (ILS) 6DR4004-6G / -8G

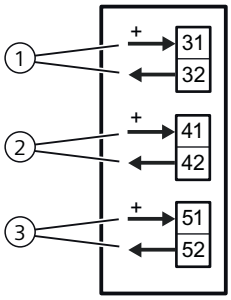

① Fault message output, has no function in combination with 6DR4004-3ES
② Digital output 1
③ Digital output 2

Figure 4-9 Inductive Limit Switches (ILS)

See also

Inductive Limit Switches (ILS) 6DR4004-6G / -8G (Page 118)

4.2.5.4 Mechanic Limit Switches (MLS) 6DR4004-6K

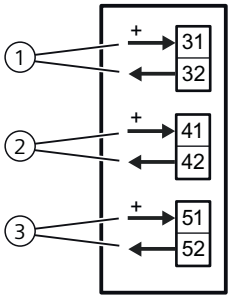

① Fault message output, has no function in combination with 6DR4004-4ES
② Digital output 1
③ Digital output 2

Figure 4-10 Mechanic Limit Switches (MLS)

See also

Mechanic Limit Switches (MLS) 6DR4004-6K (Page 118)

Procedure

1. Loosen the screw ① on the transparent cover ②.
2. Pull the transparent cover ② up to the front end stop.
3. Tighten every cable in the corresponding terminal.

4. Slide the transparent cover ② up to the end stop of the electronics.
5. Tighten the screw ① of the transparent cover ②.
6. Connect the cables of each switch to the lug of the printed circuit board in pairs. Use the provided cable ties ③ for this purpose.

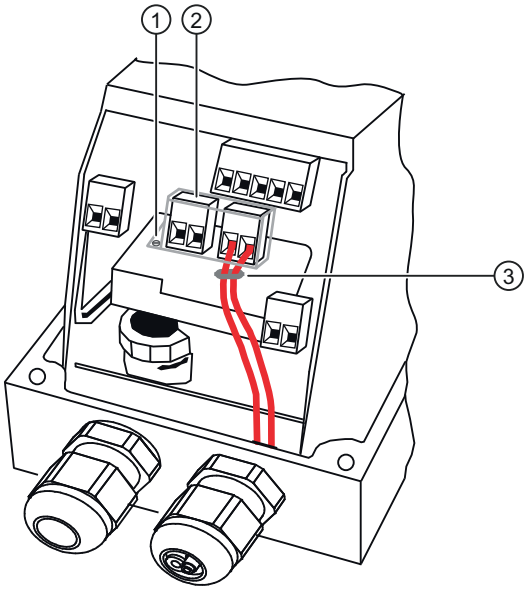

① Screw
② Cover
③ Cable tie

Figure 4-11 Connecting the cables

4.2.6 Option device version M12 connector

This section describes which terminal of the devices and option modules listed below is connected with the respective pole of the M12 connector.

Note

Technical specifications

Observe the specifications for the electrical data in the certificate and/or in section "Technical data (Page 73)".

View of the mating side pole pattern

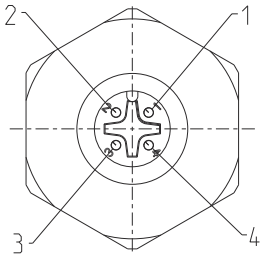

Pole designation	Wire color of M12 basic connector socket
1	Brown
4	Black
3	Blue
2	White

4.2.6.1 In the basic unit with 4 to 20 mA/HART

You have a positioner 6DR50/1..-0.**R**.. or 6DR50/1..-0.**S**. In this version of the positioner, the current input I_W 4 to 20 mA of the electronics is connected via the M12 device plug.

Table 4-1 Assignment diagram

Current input terminal	Pole designation
6 (+)	1 - Brown
Shield support of enclosure	4 - Black
7 and 8 (-)	3 - Blue

4.2.6.2 In the basic unit with PROFIBUS PA

You have a positioner 6DR55..-0.**R**.. or 6DR55..-0.**S**. In this case the M12 connector is connected to the bus circuit of the basic electronics.

Table 4-2 Assignment diagram

Bus circuit terminal	Pole designation
7	1 - Brown
Shield support of enclosure	4 - Black
6	3 - Blue

4.2.6.3 In the basic unit with FOUNDATION Fieldbus

You have a positioner 6DR56..-0.**R**.. or 6DR56..-0.**S**.. In this case the M12 connector is connected to the bus circuit of the basic electronics.

Table 4-3 Assignment diagram

Bus circuit terminal	Pole designation
7	1 - Brown
Shield support of enclosure	4 - Black
6	3 - Blue

4.2.6.4 In the basic unit with Analog Output Module (AOM) 6DR4004-6J / -8J (-Z D53)

You have a positioner with order suffix -Z order code D53. In this version of the positioner, the current output of Analog Output Module (AOM) is electrically connected to the M12 connector.

Table 4-4 Assignment diagram

Current output terminal	Pole designation
61 (+)	1 - Brown
Shield support of enclosure	4 - Black
62 (-)	3 - Blue

4.2.6.5 In the basic unit with Position Transmitter (-Z D54)

You have a positioner with order suffix -Z order code D54. In this version of the positioner, the installed Analog Input Module (AIM) 6DR4004-6F/-8F is electrically connected to the M12 connector. You connect the Position Transmitter 6DR4004-1ES/-2ES using the M12 connector.

Table 4-5 Assignment diagram

Terminal	Pole designation
REF	2 - White
POS	3 - Blue
GND	4 - Black
VCC	1 - Brown

4.2.6.6 In the basic unit with Digital I/O Module (DIO) 6DR4004-6A / -8A (-Z D55)

You have a positioner with order suffix -Z order code D55. In this version of the positioner, the current output of Digital I/O Module (DIO) is electrically connected to the M12 connector.

Table 4-6 Assignment diagram

Terminal of digital outputs A1 and A2	Pole designation
41 (+)	1 - Brown
52 (-)	4 - Black
42 (-)	3 - Blue
51 (+)	2 - White

4.2.6.7 In the basic unit with Inductive Limit Switches (ILS) 6DR4004-6G /-8G (-Z D56)

You have a positioner with order suffix -Z order code D56. In this version of the positioner, the digital outputs A1 and A2 of the Inductive Limit Switches (ILS) are electrically connected to the M12 device plug.

Table 4-7 Assignment diagram

Terminal of digital outputs A1 and A2	Pole designation
41 (+)	1 - Brown
52 (-)	4 - Black
42 (-)	3 - Blue
51 (+)	2 - White

4.2.6.8 In the basic unit with Mechanic Limit Switches (MLS) 6DR4004-6K (-Z D57)

You have a positioner with order suffix -Z order code D57. In this version of the positioner, the digital outputs A1 and A2 of the Mechanic Limit Switches (MLS) are electrically connected to the M12 connector.

Table 4-8 Assignment diagram

Terminal of digital outputs A1 and A2	Pole designation
41 (+)	1 - Brown
52 (-)	4 - Black
42 (-)	3 - Blue
51 (+)	2 - White

4.3 Pneumatic connection

WARNING

Supply pressure PZ

For safety reasons, the supply pressure PZ can be fed after installation only if the positioner is switched to "P-Manual mode" when an electrical signal is present. This operating mode is preset in the delivery state.

Note

Specifications regarding air quality

Observe the specifications regarding the air quality in section "Technical specifications > Pneumatic data (Page 74)".

Note

Leakage

Besides continuous air consumption, a leakage can cause the positioner to try to compensate the position deviation. This will result in premature wear in the entire control device.

- Check offline for leakage using the "11.LEAK" diagnostic parameter.
- If there is leakage, check the pneumatic connections for leaks.

4.3.1 Pneumatic connection for 6DR5..0/1/2/3

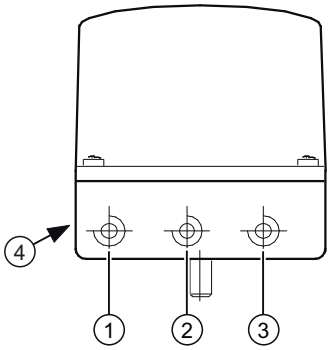

① Output: Actuating pressure Y2 *)

② Input: Supply pressure PZ

③ Output: Actuating pressure Y1

④ Exhaust air outlet with sound absorber, thread G¼

*) for double-acting actuators

Figure 4-12 Pneumatic connection, example

4.3.2 Pneumatic connection for 6DR5..5 and 6DR5..6

Structure

The pneumatic connections are provided on the right side of the positioner.

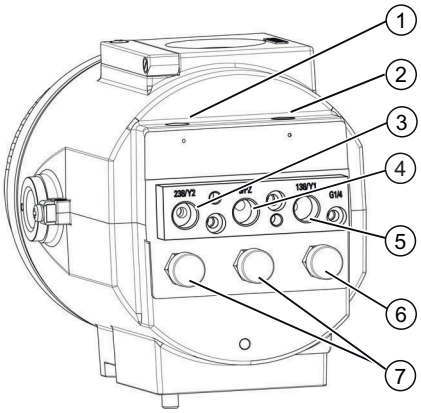

① Restrictor Y2 *)
② Restrictor Y1
③ Output: Actuating pressure Y2 *)
④ Input: Supply pressure PZ
⑤ Output: Actuating pressure Y1
⑦ Enclosure ventilation (2x)
⑥ Exhaust air outlet

*) for double-acting actuators

Figure 4-13 Pneumatic connection in the flameproof enclosure

4.4 Restrictors

- Reduce the air output to achieve travel times of T > 1.5 s for small actuators. Use restrictors Y1 ① and Y2 ② for this purpose.
- When turned clockwise, they reduce the air output and finally shut it off.
- In order to set the restrictors, we recommend closing them and then opening slowly.
- In case of double-acting valves, ensure that both restrictors have approximately the same setting.

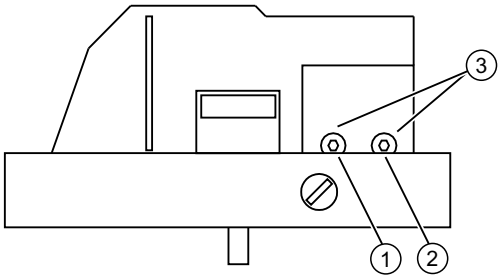

① Restrictor Y1

② Restrictor Y2, only in the version for double-acting actuators *)

③ Hexagon socket-head screw 2.5 mm

Figure 4-14 Restrictors

*) Restrictor Y2 ② is not active for single-acting Fail in Place (order suffix F01).

Commissioning 5

5.1 Basic safety instructions

WARNING

Lever for position detection

Danger of crushing and shearing with mounting kits which use a lever for position detection. During commissioning and ongoing operation, severing or squeezing of limbs could occur as a result of the lever. Risk of injury when working on control valves due to the high operating force of the pneumatic actuator.

- Do not reach into the range of motion of the lever following mounting of the positioner and mounting kit.

WARNING

Improper commissioning in hazardous areas

Device failure or risk of explosion in hazardous areas.

- Do not commission the device until it has been mounted completely and connected in accordance with the information in Installing/mounting (Page 25).
- Before commissioning take the effect on other devices in the system into account.

WARNING

Commissioning and operation with error message

If an error message displays, correct operation is no longer guaranteed.

- Check the severity of the error.
- Correct the error.
- If the error still exists:
  - Take the device out of operation.
  - Do not restart the device.

The same risk continues to apply when error messages are switched off or disabled.

WARNING

Loss of explosion protection

Risk of explosion in hazardous areas if the device is open or not properly closed.

- Close the device as described in Installing/mounting (Page 25).

WARNING

Opening device in energized state

Risk of explosion in hazardous areas

- Only open the device in a de-energized state.
- Check prior to commissioning that the cover, cover locks, and cable inlets are assembled in accordance with the directives.

Exception: Devices having the type of protection "Intrinsic safety Ex i" may also be opened in energized state in hazardous areas.

WARNING

Water in compressed air line

Device damage.

The factory setting for the purging air selector is "IN". In the "IN" position, water from the compressed air line may enter the device from the pneumatics during initial commissioning.

- Before commissioning, make sure that no water is present in the compressed air line.

If you cannot be sure that there is no water in the compressed air line:

- Set the purging air selector to "OUT". In this way, you prevent water from the compressed air line from penetrating the device.
- Only set the purging air selector to "IN" again when all water has been discharged from the compressed air line.

CAUTION

Increased sound pressure level

Changes to the sound absorber of the positioner or the mounting of pneumatic components or pneumatic options on the positioner can cause a sound pressure with a level of 80 dBA to be exceeded.

- Wear suitable hearing protection to protect yourself against hearing damage.

When operating the positioner with natural gas, you must follow and adhere to the following safety notes:

WARNING

Operation with natural gas

1. Only positioners and option modules which are connected to power supplies with type of protection "Intrinsic safety, protection level [ia]" may be operated with natural gas.
2. Do not operate the positioner with natural gas in closed spaces.
3. Natural gas is continuously blown off, depending on the model. Special care must therefore be taken during maintenance activities near the positioner. Always ensure that the immediate surroundings of the positioner are adequately ventilated.
   The maximum values for ventilation are listed in section "Natural gas as actuator medium (Page 77)".
4. If you operate the positioner with natural gas, it is not permitted to use Mechanic Limit Switches (MLS).
5. You must depressurize devices operated with natural gas adequately for maintenance work. Open the lid in an explosion-free atmosphere and depressurize the device for at least two minutes.

Note

Quality of natural gas

Only use natural gas which is clean, dry and free from additives.

5.2 Overview

Note

- During the initialization process, the operating pressure must be at least one bar more than that required to close or open the valve. However, the operating pressure should not be greater than the maximum permissible operating pressure for the actuator.

General information about commissioning

1. After installing the positioner on a pneumatic actuator, you must supply electric and pneumatic auxiliary power to it.
2. The positioner is in the "P manual mode" before initialization. At the same time, "NOINI" blinks in the lower line of the display.
3. Position feedback: You can adjust the range of position detection using the friction clutch if necessary.
4. Adjust the positioner as per the respective actuator with the help of the initialization process and by setting the parameters. If required, use the "PRST" parameter to cancel the adjustment of the positioner on the actuator. The positioner is again in the "P manual mode" after this process.

Types of initialization

You can initialize the positioner as follows:

- Automatic initialization:
  during automatic initialization, the positioner determines the following one after the other:
  - The direction of action
  - The actuator travel and angle of rotation
  - The travel time of the actuator

The positioner also adjusts the control parameters as per the dynamic response of the actuator.

- Manual initialization:
  the actuator travel and the angle of rotation of the actuator are set manually. The remaining parameters are automatically determined. This function is useful for valves which are lined, for example, with PTFE.
- Copying the initialization data when replacing a positioner:
  the initialization data of a positioner can be read and copied into another positioner. A defective device can thus be replaced without interrupting an ongoing process through initialization.

You have to define a few parameters for the positioner before initialization. Owing to the preset values, you cannot adjust further parameters for initialization.

With a suitable parameter assignment of the "DI1" parameter and activated digital input DI1, you protect the settings that were made against unintentional adjustment.

5.3 Sequence of automatic initialization

See detailed operating instructions for information on sequence of automatic initialization.

5.4 Parameter

Introduction

Parameters 1 to 5 are the same for all versions of the positioner. These parameters are used to adjust the positioner to the actuator. Normally, setting these parameters is sufficient to be able to operate the positioner on an actuator.

If you want to get to know all details of the positioner, gradually try out the effects of the remaining parameters by systematic testing.

Note

Factory-set parameter values are printed in bold in the following table.

Overview

Parameter	Function	Parameter values		Unit
1.YFCT	Type of actuator	Normal	Inverted	
	Part-turn actuator	turn	-turn	
	Linear actuator	**WAY**	-WAY	
	Linear actuator - carrier pin on actuator spindle	FWAY	-FWAY	
	Linear actuator - external linear potentiometer (e.g. with cylinder drives)	LWAY	-LWAY	
	Part-turn actuator with NCS/iNCS	ncSt	-ncSt	
	Linear actuator with NCS	ncSL	-ncSL	
	Linear actuator with NCS/iNCS and lever	ncSLL	-ncLL	
2.YAGL	Rated angle of rotation of positioner shaft [1]			
		33°		Degrees
		90°		
3.YWAY[2]	Range of stroke (optional setting) [3]			
		OFF		mm
		5 | 10 | 15 | 20 (Short lever 33°, range of stroke 5 mm to 20 mm)		
		25 | 30 | 35 (Short lever 90°, range of stroke 25 mm to 35 mm)		
		40 | 50 | 60 | 70 | 90 | 110 | 130 (Long lever 90°, range of stroke 40 mm to 130 mm)		
4.INITA	Initialization (automatic)	**NOINI** | no / ###.# | Strt		
5.INITM	Initialization (manual)	**NOINI** | no / ###.# | Strt		

1)	Set the transmission ratio selector accordingly.
2)	Parameter only appears with "WAY", "-WAY", "ncSLL", and "-ncLL"
3)	If used, the value on the actuator must correspond to the set range of stroke on the lever arm. Carrier must be set to the value of the actuator travel or, if this value is not scaled, to the next larger scale value.

5.5 Purge air switching

When the enclosure is open, the purging air selector above the pneumatic manifold on the pneumatic block can be accessed.

- In the IN position, the enclosure is flushed from inside with a small volume of clean and dry instrument air.
- In the OUT position, the purge air is directly directed towards outside.

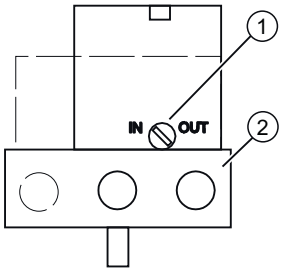

① Purging air selector

② Pneumatic connections Y1, PZ and Y2

Figure 5-1 Purging air selector on the pneumatic block; view of the pneumatic connection side of the positioner with open lid

The factory setting is the "IN" position.

5.6 Commissioning linear actuators

5.6.1 Preparing linear actuators for commissioning

Requirement

You have already installed the positioner using the suitable mounting kit.

Setting the transmission ratio selector

Commissioning

The setting of the transmission ratio selector is extremely important to commission the positioner.

Stroke [mm]	Position of the transmission ratio selector
5 ... 20	33°
25 ... 35	90°
40 ... 130	90°

Connecting the positioner

1. Connect a suitable power supply. The positioner is now in the "P manual mode". The current potentiometer voltage (P) in percent is shown in the upper line of the display, e.g. "P37.5", and "NOINI" flashes in the bottom line:

2. Connect the actuator and the positioner to the pneumatic lines.
3. Supply the pneumatic auxiliary power to the positioner.

Setting the actuator

1. Check whether the mechanical unit can be moved freely in the entire travel range. Move the actuator to the respective end position for this purpose using the ⊿ or ▽ button.
2. Now move the actuator to the horizontal position of the lever.

3. A value between "P48.0" and "P52.0" is shown on the display.
4. If a value beyond this range is shown on the display, you must move the friction clutch. Move the friction clutch until a value between "P48.0" and "P52.0" is reached. The closer this value is to "P50.0", the more accurately the positioner determines the stroke travel.
   The following applies to the flameproof enclosure version:
   The inner friction clutch is fixed. Therefore, only move the outer friction clutch. This also applies when using an internal NCS module.
   The following applies to device versions without flameproof enclosure with internal NCS module 6DR4004-5L.:
   The inner friction clutch has no function. This means you should only adjust the adjustment wheel of the magnet clamp. Requirement: 'YFCT (Page 56)' parameter is set.

5.6.2 Automatic initialization of linear actuators

Requirements

The following conditions must be fulfilled before activating the automatic initialization:

1. The actuator spindle can be moved completely.
2. The actuator spindle is at a central position after travel.

Initializing the linear actuator automatically

Note

Interrupting initialization

An ongoing initialization can be interrupted at any time. To do this, press . The settings configured until then are retained.

All parameters are reset to factory settings only if you have explicitly activated the preset settings in the "PRST" parameter.

Note

Commissioning of a tight-closing valve

If the valve is tight-closing, set the "YCLS" parameter before commissioning. This ensures that the end positions are approached for at least 15 seconds during initialization.

1. Switch to the "Configuration" mode. To do this, keep the button pressed for at least 5 seconds. The display shows the following:

2. Call the "2.YAGL" parameter. To do this, press . The following is shown on the display depending on the setting:

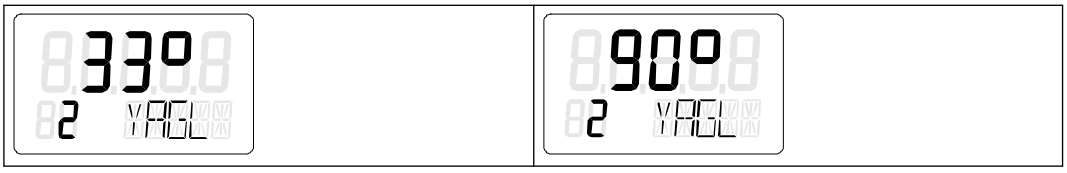

3. Check whether the value displayed in the "2.YAGL" parameter matches the setting of the transmission ratio selector. If required, change the setting of the transmission ratio selector to 33° or 90°.
4. Set the "3.YWAY" parameter to determine the total stroke in mm. The setting of parameter 3 is optional. The display shows the determined total stroke at the end of the initialization phase.
   – Press the button if you do not require any information about the total stroke in mm. You then reach parameter 4.
   – Call the "3.YWAY" parameter. To do this, press . The display shows the following:

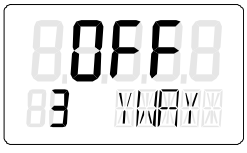

Note

Set the "3.YWAY" parameter

1. On the scale of the lever, read the value marked by the carrier pin.
2. Set the parameter with the buttons and to the read value.

5. Call the "4.INITA" parameter. To do this, briefly press the button. The display shows the following:

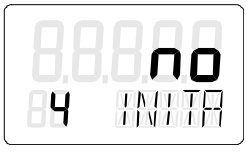

6. Start the initialization process. To do this, keep the button pressed for at least 5 seconds until the display shows the following:

The positioner runs through several initialization steps during the automatic initialization process. The lower line of the display indicates which initialization step is currently being run through. The initialization process depends on the actuator used, and takes up to 15 minutes.

7. The following display indicates that the initialization is complete:

5.6.3 Manual initialization of linear actuators

See detailed operating instructions for information on manual initialization of linear actuators.

5.7 Commissioning part-turn actuators

5.7.1 Preparing part-turn actuators for commissioning

Note

Setting of the adjustment angle

The usual adjustment angle for part-turn actuators is 90°.

- Set the transmission ratio selector in the positioner to 90°.

Condition

The following conditions must be fulfilled before activating the initialization:

1. You have installed the positioner for the part-turn actuators using the suitable mounting kit.
2. You have connected the actuator and the positioner to the pneumatic lines.
3. Supplying the positioner with the supply pressure PZ.
4. The positioner has been connected to a suitable power supply.

Setting the actuator

1. The positioner is in the "P manual mode". The current potentiometer voltage P in percent is shown on the upper line in the display. "NOINI" blinks in the lower line of the display. Examples of corresponding displays are given below:

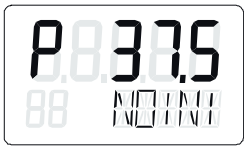

2. Check whether the mechanical unit can be moved freely in the entire travel range. Move the drive to the respective end position for this purpose using the ⊕ or ⊖ button.

Note

End position

By simultaneously pressing the ⊕ and ⊖ buttons, you reach the end position faster.

3. After checking, move the actuator to a central position. This accelerates the initialization process.

5.7.2 Automatic initialization of part-turn actuators

Requirement

The following conditions must be fulfilled before activating the automatic initialization:

1. The travel range of the actuator can be passed through completely.
2. The actuator shaft is at a central position.

Initializing the part-turn actuator automatically

Note

Interrupting initialization

An ongoing initialization can be interrupted at any time. To do this, press ✍. The settings configured until then are retained.

All parameters are reset to factory settings only if you have explicitly activated the preset settings in the "PRST" parameter.

Note

Commissioning of a tight-closing valve

If the valve is tight-closing, set the "YCLS" parameter before commissioning. This ensures that the end positions are approached for at least 15 seconds during initialization.

1. Switch to the "Configuration" mode. To do this, press the ✍ button for at least 5 seconds until the display shows the following:

2. Use the ▽ button to change from linear actuator to part-turn actuator until the display shows the following:

3. Call the "2.YAGL" parameter. To do this, briefly press the ✍ button. This parameter has already been set to 90° automatically. The display shows the following:

4. Call the "4.INITA" parameter. To do this, briefly press the button. The display shows the following:

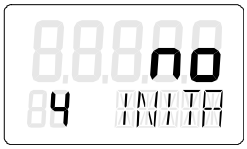

5. Start the initialization process. To do this, press the button for at least 5 seconds until the display shows the following:

The positioner runs through several initialization steps during the automatic initialization process. The lower line of the display indicates which initialization step is currently being run through. The initialization process depends on the actuator used, and takes up to 15 minutes.

6. The following display indicates that the initialization is complete. The total angle of rotation of the actuator is shown in the upper line of the display.

5.7.3 Manual initialization of part-turn actuators

See detailed operating instructions for information on manual initialization of part-turn actuators.

5.8 Canceling initialization

1. Press the button.
   - Canceling automatic initialization: the display shows "INITA".
   - Canceling manual initialization: the display shows "INITM".

   The positioner is in the "Configuration" mode.
2. Exit the "Configuration" mode. To do this, press the button for at least 5 seconds.
   The software version is displayed.
   After releasing the button, the positioner is in "P manual mode". The positioner is not initialized.

Service and maintenance

6

6.1 Basic safety instructions

6.1.1 Maintenance

The device is maintenance-free. However, a periodic inspection according to pertinent directives and regulations must be carried out.

An inspection can include:

- Ambient conditions
- Seal integrity of the process connections, cable entries, and cover
- Reliability of power supply, lightning protection, and grounds

WARNING

Dust layers above 5 mm

Risk of explosion in hazardous areas.

Device may overheat due to dust build up.

- Remove dust layers in excess of 5 mm.

CAUTION

Releasing button lock

Improper modification of parameters could influence process safety.

- Make sure that only authorized personnel may cancel the button locking of devices for safety-related applications.

NOTICE

Penetration of moisture into the device

Damage to device.

- Make sure when carrying out cleaning and maintenance work that no moisture penetrates the inside of the device.

6.2 Cleaning

The positioner is maintenance-free to a large extent. Screens are installed in the pneumatic connections of the positioners to protect them from rough dirt particles. If there are dirt particles in the supply air (PZ), they damage the screens and hamper the function of the positioner. Clean the screens as described in the following two chapters.

6.2.1 Positioners 6DR5..0, 6DR5..3 and 6DR5..5

Procedure for removal and cleaning of the sieves

1. Switch off the supply pressure PZ.
2. Remove the pneumatic pipelines.
3. Unscrew the lid of the 6DR5..0 or 6DR5..3 enclosure.
4. Remove the three screws on the pneumatic terminal strip.
5. Remove the sieves and O-rings behind the terminal strip.
6. Clean the sieves, e.g. using compressed air.

Procedure for installation of the sieves

CAUTION

Damage to the polycarbonate enclosure 6DR5..0

- The enclosure is damaged due to screwing in the self-tapping screws improperly.
- Ensure that the available thread pitches are used.
- Turn the screws anticlockwise until they engage noticeably in the thread pitch.
- Tighten the self-tapping screws only after they have engaged.

1. Insert the sieves into the recesses of the enclosure.
2. Place the O-rings on the sieves.
3. Insert the pneumatic terminal strip.
4. Tighten the three screws. Note: With the polycarbonate enclosure, the screws are self-tapping.
5. Place the lid on and tighten it.
6. Connect the pneumatic pipelines again.

6.2.2 Positioners 6DR5..1, 6DR5..2 and 6DR5..6

Removal, cleaning and installation of the screens

1. Switch off the supply pressure PZ.
2. Remove the pneumatic connecting cables.
3. Remove the metal screen from the bores carefully.
4. Clean the metal screens, e.g. using compressed air.
5. Insert the screens.
6. Connect the pneumatic pipelines again.

Cleaning the enclosure

- Clean the outside of the enclosure with the inscriptions and the display window using a cloth moistened with water or a mild detergent.
- Do not use any aggressive cleansing agents or solvents, e.g. acetone. Plastic parts or the painted surface could be damaged. The inscriptions could become unreadable.

WARNING

Electrostatic charge

Risk of explosion in hazardous areas if electrostatic charges develop, for example, when cleaning plastic surfaces with a dry cloth.

- Prevent electrostatic charging in hazardous areas.

6.3 Maintenance and repair work

Send defective devices to the repairs department, together with information on the malfunction and the cause of the malfunction. When ordering replacement devices, please provide the serial number of the original device. You can find the serial number on the nameplate.

WARNING

Impermissible repair of the device

- Repair must be carried out by Siemens authorized personnel only.

WARNING

Maintenance during continued operation in a hazardous area

There is a risk of explosion when carrying out repairs and maintenance on the device in a hazardous area.

- Isolate the device from power.

- or -

- Ensure that the atmosphere is explosion-free (hot work permit).

WARNING

Impermissible accessories and spare parts

Risk of explosion in areas subject to explosion hazard.

- Only use original accessories or original spare parts.
- Observe all relevant installation and safety instructions described in the instructions for the device or enclosed with the accessory or spare part.

WARNING

Improper connection after maintenance

Risk of explosion in areas subject to explosion hazard.

- Connect the device correctly after maintenance.
- Close the device after maintenance work.

Refer to Electrical connection (Page 38).

6.4 Return procedure

To return a product to Siemens, see Return to Siemens (https://support.industry.siemens.com/cs/ww/en/sc/3098).

Contact your Siemens representative to clarify if a product is repairable, and how to return it. They can also help with quick repair processing, a repair cost estimate, or a repair report/cause of failure report.

NOTICE
Decontamination The product may have to be decontaminated before it is returned. Your Siemens contact person will let you know for which products this is required.

6.5 Disposal

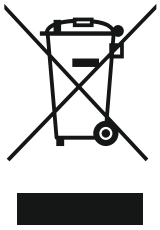

Devices described in this manual should be recycled. They may not be disposed of in the municipal waste disposal services according to the Directive 2012/19/EC on waste electronic and electrical equipment (WEEE).

Devices can be returned to the supplier within the EC and UK, or to a locally approved disposal service for eco-friendly recycling. Observe the specific regulations valid in your country.

Further information about devices containing batteries can be found at: Information on battery/product return (WEEE) (https://support.industry.siemens.com/cs/document/109479891/)

Technical data

7

7.1 All device versions

7.1.1 Rated conditions

Rated conditions	
Ambient conditions	For use indoors and outdoors.
Ambient temperature	In hazardous areas, observe the maximum permissible ambient temperature corresponding to the temperature class.
• Permissible ambient temperature for operation [1)2)]	-30 ... +80 °C (-22 ... +176°F)
• Maximum permissible height above sea level	Up to 2 000 m above sea level
• Relative humidity	0 ... 100%
Degree of pollution	2
Overvoltage category	II
Degree of protection of enclosure	
• According to IEC 60529	IP66
• According to NEMA 250	Type 4X
Vibration resistance	
• Harmonic oscillations (sine) according to IEC 60068-2-6	3,5 mm (0.14"), 2 ... 27 Hz, 3 cycles/axis
	98,1 m/s² (321.84 ft/s²), 27 ... 300 Hz, 3 cycles/axis
• Bump (half-sine) according to IEC 60068-2-27	150 m/s² (492 ft/s²), 6 ms, 1 000 shocks/axis
• Noise (controlled digitally) according to IEC 60068-2-64	10 ... 200 Hz; 1 $(m/s^2)^2$/Hz (3.28 $(ft/s^2)^2$/Hz)
	200 ... 500 Hz; 0,3 $(m/s^2)^2$/Hz (0.98 $(ft/s^2)^2$/Hz)
	4 hours/axis
• Recommended range of continuous operation of the entire control valve	≤ 30 m/s² (98.4 ft/s²) without resonance rise
Climate class	According to IEC/EN 60721-3
• Storage	1K23, -40 ... +80 °C (-40 ... +176 °F)
• Transport	2K12, -40 ... +80 °C (-40 ... +176 °F)
Recommended storage duration [3)]	12 months
Expected service life	15 years

1) At ≤ -10 °C (≤ 14°F), the refresh rate of the display is limited

2) The following applies to order suffix (order code) **-Z M40**: -40 ... +80 °C (-40 ... +176°F)

3) At storage temperature -40 ... +80 °C

See also

Proper mounting (Page 27)

7.1.2 Pneumatic data

Pneumatic data	
Auxiliary power (air supply)	Compressed air, carbon dioxide (CO_2), nitrogen (N), noble gases or cleaned natural gas
• Pressure [1]	1.4 ... 7 bar (20.3 ... 101.5 psi)
Air quality to ISO 8573-1	
• Solid particulate size and density	Class 3
• Pressure dew point	Class 3 (min. 20 K (36 °F) below ambient temperature)
• Oil content	Class 3
Unrestricted flow (DIN 1945)	
• Pressurize actuator [2]	
2 bar; 0.1 KV (29 psi; 0.116 CV)	4.1 Nm^3/h (2.6 scfm)
4 bar; 0.1 KV (58 psi; 0.116 CV)	7.1 Nm^3/h (4.4 scfm)
6 bar; 0.1 KV (87 psi; 0.116 CV)	9.8 Nm^3/h (6.1 scfm)
• Depressurize actuator for all versions except fail in place [2]	
2 bar; 0.2 KV (29 psi; 0.232 CV)	8.2 Nm^3/h (5.1 scfm)
4 bar; 0.2 KV (58 psi; 0.232 CV)	13.7 Nm^3/h (8.5 scfm)
6 bar; 0.2 KV (87 psi; 0.232 CV)	19.2 Nm^3/h (12.0 scfm)
• Depressurize actuator for fail in place version	
2 bar; 0.1 KV (29 psi; 0.116 CV)	4.3 Nm^3/h (2.7 scfm)
4 bar; 0.1 KV (58 psi; 0.116 CV)	7.3 Nm^3/h (4.5 scfm)
6 bar; 0.1 KV (87 psi; 0.116 CV)	9.8 Nm^3/h (6.1 scfm)
Valve leakage	$< 6 \cdot 10^{-4}$ Nm^3/h ($3.7 \cdot 10^{-4}$ scfm)
Throttle ratio	Adjustable up to ∞: 1
Typical auxiliary power consumption in the controlled state	0.01 Nm^3/h (0.006 scfm)
Sound pressure level	$L_{A\,eq} < 75$ dB $L_{A\,max} < 80$ dB
Sound pressure with installed booster [3]	$L_{Aeq} < 95.2$ dB $L_{A\,max} < 98.5$ dB

[1] The following applies to fail in place double acting: 3 ... 7 bar (43.5 ... 101.5 psi)

[2] When using device versions Ex d (6DR5..5-... and 6DR5..6-...), values are reduced by approximately 20%.

[3] Read the warning notice "Increased sound pressure level".

See also

Basic safety instructions (Page 51)

7.1.3 Construction

Construction		
How does it work?		
• Range of stroke (linear actuator)	3 to 130 mm (0.12 to 5.12")	
• Angle of rotation (part-turn actuator)	30° ... 100°	
	15° ... 160°	• For 6DR50.5, 6DR51.5, 6DR50.6 and 6DR51.6
Mounting method		
• On the linear actuator	Using mounting kit 6DR4004-8V and, where necessary, an additional lever arm 6DR4004-8L on actuators according to IEC 60534-6-1 (NAMUR) with a fin, columns, or a plane surface.	
• On the part-turn actuator	Using mounting kit 6DR4004-8D or TGX:16300-1556 on actuators with mounting plane according to VDI/VDE 3845 and IEC 60534-6-2: The required mount must be provided on the actuator-side.	
Weight, positioner without option modules or accessories		
• 6DR5..0 Glass-fiber reinforced polycarbonate enclosure	Approx. 0.9 kg (1.98 lb)	
• 6DR5.11 aluminum enclosure, only single-acting	Approx. 1.3 kg (2.86 lb)	
• 6DR5..2 stainless steel enclosure	Approx. 3.9 kg (8.6 lb)	
• 6DR5..3 aluminum enclosure	Approx. 1.6 kg (3.53 lb)	
• 6DR5..5 aluminum enclosure, flameproof, rugged	Approx. 5.2 kg (11.46 lb)	
• 6DR5..6 stainless steel enclosure, flameproof, rugged	Approx. 8.4 kg (18.5 lb)	
Material		
• Enclosure		
6DR5..0 polycarbonate	Glass-fiber reinforced polycarbonate (PC)	
6DR5.11 aluminum, only single-acting	GD AlSi12	
6DR5..2 stainless steel	Austenitic stainless steel 316Cb, mat. No. 1.4581	
6DR5..3 aluminum	GD AlSi12	
6DR5..5 aluminum, flameproof, rugged	GK AlSi12	
6DR5..6 stainless steel enclosure, flameproof, rugged	Austenitic stainless steel 316L, mat. No. 1.4409	
• Pressure gauge block	Aluminum AlMgSi, anodized or stainless steel 316	
Versions		
• In the polycarbonate enclosure 6DR5..0	Single-acting and double-acting	
• In aluminum enclosure 6DR5.11	Single-acting	
• In aluminum enclosures 6DR5..3 and 6DR5..5	Single-acting and double-acting	
• In stainless steel enclosures 6DR5..2 and 6DR5..6	Single-acting and double-acting	
Torques		
• Part-turn actuator fixing screws DIN 933 M6x12-A2	5 Nm (3.7 ft lb)	
• Linear actuator fixing screws DIN 933 M8x16-A2	12 Nm (8.9 ft lb)	
• Gland pneumatic G¼	15 Nm (11.1 ft lb)	
• Pneumatic gland 1/4-18 NPT		

Construction	
Without sealant	12 Nm (8.9 ft lb)
With sealant	6 Nm (4.4 ft lb)
• Cable glands	
Screw-in torque for plastic gland in all enclosures	4 Nm (3 ft lb)
Screw-in torque for cable gland made of metal/stainless steel in polycarbonate enclosure	6 Nm (4.4 ft lb)
Screw-in torque for metal/stainless steel glands in aluminum/stainless steel enclosure	6 Nm (4.4 ft lb)
Screw-in torque for NPT adapter made of metal/stainless steel in polycarbonate enclosure	8 Nm (5.9 ft lb)
Screw-in torque for NPT adapter made of metal/stainless steel in aluminum/stainless steel enclosure	15 Nm (11.1 ft lb)
Screw-in torque for NPT gland in the NPT adapter NOTE: To avoid damage to the device, the NPT adapter must be held in place while the NPT gland is screwed into the NPT adapter.	68 Nm (50 ft lb)
Tightening torque for union nut made of plastic	2.5 Nm (1.8 ft lb)
Tightening torque for union nut made of metal/stainless steel	4 Nm (3 ft lb)
• Pressure gauge block fixing screws	6 Nm (4.4 ft lb)
Manometer	
• Degree of protection	
Manometer made of plastic	IP31
Manometer, steel	IP44
Manometer made of stainless steel 316	IP54
• Vibration resistance	In accordance with DIN EN 837-1
Connections, electrical	
• Screw terminals	2.5 mm^2 AWG30-14
• Cable gland	
Without Ex protection as well as with Ex i	M20 x 1.5 or 1/2-14 NPT
With explosion protection Ex d	Ex d-certified M20 x 1.5; 1/2-14 NPT or M25 x 1.5
Connections, pneumatic	Female thread G¼ or ¼-18 NPT

7.1.4 Controller

Controller	
Control unit	
• Five-point controller	Adaptive
• Dead zone	
dEbA = auto	Adaptive
dEbA = 0.1 ... 10 %	Can be set as fixed value

Controller	
Analog-to-digital converter	
• Scanning time	10 ms
• Resolution	≤ 0,05 %
• Transmission error	≤ 0,2 %
• Temperature influence	≤ 0.1 %/10 K (≤ 0.1 %/18 °F)

7.1.5 Natural gas as actuator medium

Introduction

For operation with natural gas, note that used natural gas escapes at the exhaust air outlets.

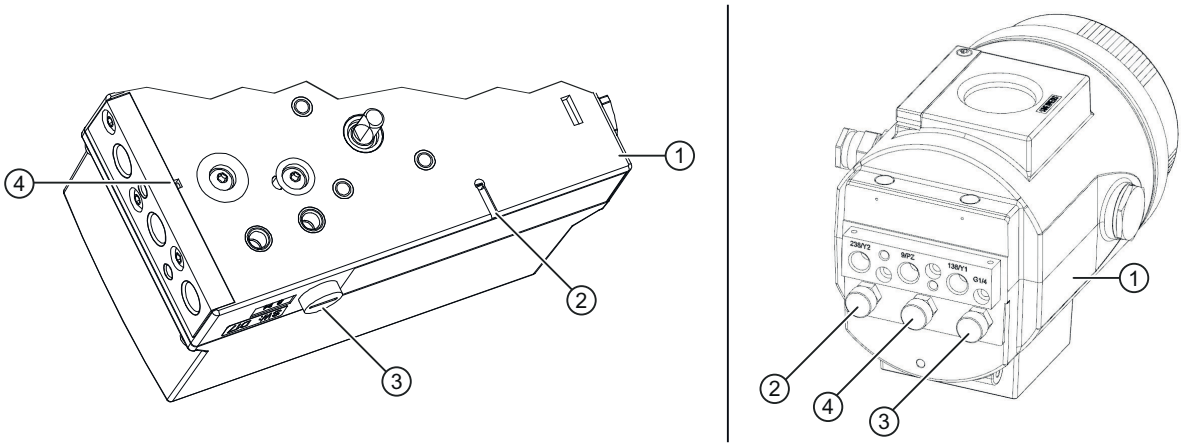

① Base plate
② Exhaust air outlet enclosure ventilation
③ Exhaust air outlet sound absorber
④ Exhaust air outlet near the pneumatic connections

Note

The following applies for exhaust air outlet with sound absorber ③:

The positioner is supplied as standard with a sound absorber. To provide an outlet for the exhaust air, replace the sound absorber by a G¼ pipe coupling.

The following applies for enclosure ventilation ② and control air outlet ④:

1. With the "flameproof enclosure" device version in an aluminum enclosure with order suffix -Z K50 "Operation with natural gas", you can completely collect and discharge the escaping natural gas.
2. In all other device versions, the escaping natural gas is released into the environment.

Maximum values for escaping natural gas

- The quantity of escaping natural gas is negligible during regulated operation.
- If a control error occurs, a maximum of 30 Nl/min of natural gas will escape at the enclosure vent ② and a maximum of 89 Nl/min at the control air outlet ④.

7.1.6 Certificates and approvals

7.1.6.1 Safety information for explosion protection

Checking the consignment

1. Check the packaging and the delivered items for visible damages.
2. Report any claims for damages immediately to the shipping company.
3. Retain damaged parts for clarification.
4. Check the scope of delivery by comparing your order to the shipping documents for correctness and completeness.

WARNING

Using a damaged or incomplete device

Risk of explosion in hazardous areas.

- Do not use damaged or incomplete devices.

WARNING

Use in hazardous area

Risk of explosion.

- Only use equipment that is approved for use in the intended hazardous area and labeled accordingly.
- Do not use devices that have been operated outside the conditions specified for hazardous areas. If you have used the device outside the conditions for hazardous areas, make all Ex markings unrecognizable on the nameplate.

WARNING

Incorrect selection of type of protection

Risk of explosion in hazardous areas.

This device is approved for various types of protection.

1. Choose a type of protection.
2. Connect the device according to the selected type of protection.
3. To prevent improper use at a later time, conceal the types of protection on the nameplate that you do not plan to use.
4. Type of protection Ex e / NI is not permitted during operation with Mechanic Limit Switches (MLS) 6DR4004-6K.

WARNING

Improper commissioning in hazardous areas

Device failure or risk of explosion in hazardous areas.

- Do not commission the device until it has been mounted completely and connected in accordance with the information in Installing/mounting (Page 25).
- Before commissioning take the effect on other devices in the system into account.

WARNING

Electrostatic charge

Risk of explosion in hazardous areas if electrostatic charges develop, for example, when cleaning plastic surfaces with a dry cloth.

- Prevent electrostatic charging in hazardous areas.

WARNING

Electrostatic charging of nameplates

The nameplates used on the device can reach a capacity of 5 pF.

- Keep the device and the cables at a distance from strong electromagnetic fields.

WARNING

Maintenance during continued operation in a hazardous area

There is a risk of explosion when carrying out repairs and maintenance on the device in a hazardous area.

- Isolate the device from power.

- or -

- Ensure that the atmosphere is explosion-free (hot work permit).

WARNING

Impermissible accessories and spare parts

Risk of explosion in areas subject to explosion hazard.

- Only use original accessories or original spare parts.
- Observe all relevant installation and safety instructions described in the instructions for the device or enclosed with the accessory or spare part.

WARNING

Improper connection after maintenance

Risk of explosion in areas subject to explosion hazard.

- Connect the device correctly after maintenance.
- Close the device after maintenance work.

Refer to Electrical connection (Page 38).

WARNING

Loss of explosion protection

Risk of explosion in hazardous areas if the device is open or not properly closed.

- Close the device as described in Installing/mounting (Page 25).

WARNING

Opening device in energized state

Risk of explosion in hazardous areas

- Only open the device in a de-energized state.
- Check prior to commissioning that the cover, cover locks, and cable inlets are assembled in accordance with the directives.

Exception: Devices having the type of protection "Intrinsic safety Ex i" may also be opened in energized state in hazardous areas.

WARNING

Connecting or disconnecting device in energized state

Risk of explosion in hazardous areas.

- Connect or disconnect devices in hazardous areas only in a de-energized state.
- Install a suitable switch-off device.

Exceptions:

- Devices having the type of protection "Intrinsic safety Ex i" may also be connected in energized state in hazardous areas.

WARNING

Unsuitable cables, cable glands and/or plugs

Risk of explosion in hazardous areas.

- Use only cable glands/plugs that comply with the requirements for the relevant type of protection.
- Tighten the cable glands in accordance with the torques specified in Construction (Page 75).
- Close unused cable inlets for the electrical connections.
- When replacing cable glands, only use cable glands of the same type.
- After installation, check that the cables are seated firmly.

NOTICE

Ambient temperature too high

Damage to cable sheath.

- At an ambient temperature ≥ 60 °C (140 °F), use heat-resistant cables suitable for an ambient temperature at least 20 °C (36 °F) higher.

WARNING

Improper power supply

Risk of explosion in hazardous areas as result of incorrect power supply.

- Connect the device in accordance with the specified power supply and signal circuits. The relevant specifications can be found in the certificates, in Technical data (Page 73) or on the nameplate.

WARNING

Lack of equipotential bonding

Risk of explosion through compensating currents or ignition currents through lack of equipotential bonding.

- Ensure that the device is potentially equalized
- The cable cross-section of the equipotential bonding cable must be greater than or equal to the connecting cable of the electronics

WARNING

Unprotected cable ends

Risk of explosion through unprotected cable ends in hazardous areas.

- Protect unused cable ends in accordance with IEC/EN 60079-14.

WARNING

Improper laying of shielded cables

Risk of explosion through compensating currents between hazardous area and the non-hazardous area.

- Shielded cables that cross into hazardous areas should be grounded only at one end.
- If grounding is required at both ends, use an equipotential bonding conductor.

WARNING

With intrinsically device version (Ex i)

Risk of explosion in hazardous areas.

For intrinsically safe device versions only the certified circuits may be connected as auxiliary power supply, control and signal circuits.

- Make sure that the power source of the used circuits is marked as intrinsically safe.

WARNING

Loss of safety of device with type of protection "Intrinsic safety Ex i"

If the device or its components have already been operated in non-intrinsically safe circuits or the electrical specifications have not been observed, the safety of the device is no longer ensured for use in hazardous areas. There is a risk of explosion.

- Connect the device with type of protection "Intrinsic safety" solely to an intrinsically safe circuit.
- Observe the specifications for the electrical data on the certificate and/or in Technical data (Page 73).

WARNING

Leaky threads for "Flameproof enclosure Ex d / XP" type of protection

Risk of explosion in hazardous areas. Threads must be completely screwed into the enclosure.

- Screw the cable glands, thread adapter or blanking plug with at least 5 thread rotations into the enclosure.

WARNING

Dust layers above 5 mm

Risk of explosion in hazardous areas.

Device may overheat due to dust build up.

- Remove dust layers in excess of 5 mm.

7.1.6.2 Improper modifications

WARNING

Improper device modifications

Risk to personnel, system and environment can result from modifications to the device, particularly in hazardous areas.

- Only carry out modifications that are described in the instructions for the device. Failure to observe this requirement cancels the manufacturer's warranty and the product approvals.

WARNING

Improper modification on positioner 6DR5...6

Danger of explosion. The pneumatic terminal plate on the SIPART PS2 positioner 6DR5..6 is a safety-related component of the flameproof enclosure.

- Never loosen the screws ① of the pneumatic terminal plate.

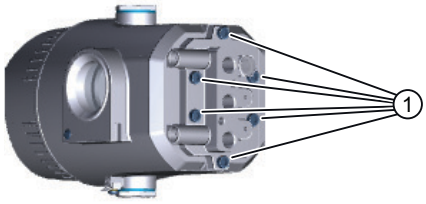

Figure 7-1 Screws of the pneumatic terminal plate on the positioner 6DR5..6

NOTICE

Improper installation of option modules

Risk of explosion in hazardous areas.

- If you upgrade the device with an option module, mark the corresponding box on the nameplate with a cross, as in the example below.
- Before you commission the device, follow the safety-related requirements according to the specifications in the valid certificate and in the "Technical specifications" section.

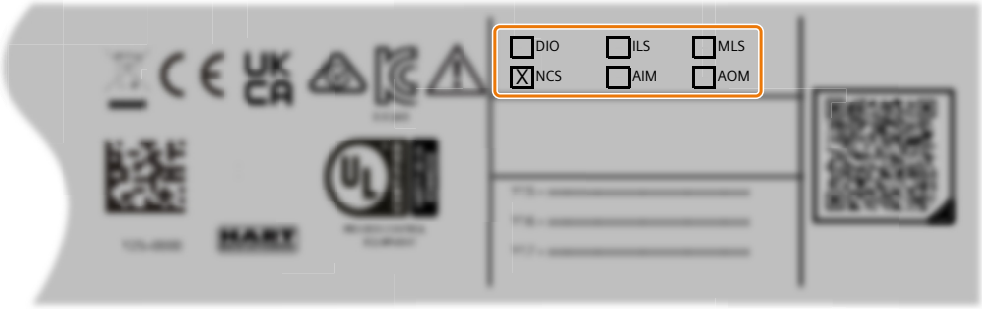

Figure 7-2 Example

When operating the positioner with natural gas, you must follow and adhere to the following safety notes:

WARNING

Operation with natural gas

1. Only positioners and option modules which are connected to power supplies with type of protection "Intrinsic safety, protection level [ia]" may be operated with natural gas.
2. Do not operate the positioner with natural gas in closed spaces.
3. Natural gas is continuously blown off, depending on the model. Special care must therefore be taken during maintenance activities near the positioner. Always ensure that the immediate surroundings of the positioner are adequately ventilated.
   The maximum values for ventilation are listed in section "Natural gas as actuator medium (Page 77)".
4. If you operate the positioner with natural gas, it is not permitted to use Mechanic Limit Switches (MLS).
5. You must depressurize devices operated with natural gas adequately for maintenance work. Open the lid in an explosion-free atmosphere and depressurize the device for at least two minutes.

Note

Quality of natural gas

Only use natural gas which is clean, dry and free from additives.

7.1.6.3 Special conditions for use in hazardous areas

Type of protection	Safety requirements		
General	Protect positioners in polycarbonate enclosures (b=0) from dangerous electrostatic charge.		
	In hazardous areas, connection and disconnection of the device is only permitted in a de-energized state. Devices with "Ex i" Intrinsic Safety type of protection may be connected in hazardous areas even when energized.		
	The nameplates used on the device can exceed a capacitance of 3 pF.		
	When the following option modules are retrofitted, the option module in use must be identified on the manufacturer nameplate by marking the respective check box with a cross:		
	Type designation	**Marking on the manufacturer nameplate**	**Marking on the printed-circuit board for retrofitting in an existing device**
	Digital I/O Module	DIO	6DR4004-6A
		DIO-2	6DR4004-6A, A5E52635850
	Inductive Limit Switches	ILS	6DR4004-6G
		ILS-2	6DR4004-6G, A5E52635888
	Mechanic Limit Switches	MLS	6DR4004-6K
		MLS-2	6DR4004-6K, A5E52659309
	Analog Output Module	AOM	6DR4004-6J
	Analog Input Module (AIM)	AIM	6DR4004-6F
	Internal NCS Module	iNCS	6DR4004-5LE
Ex i / IS Intrinsic Safety	**Requirements for operation with natural gas** **Positioners of type: (c = E) and (b = 0, 1, 2, 3) or (c = F, K) and (b = 1, 2, 3, 5, 6) or (c = E) and (b = 5, 6) and Z = K50 or (c = P) and (b = 5, 6)** Operation with natural gas is permitted under the following conditions: • The natural gas is clean and dry • Compressed air is not readily available at the operating location • To avoid a Zone 0 atmosphere around the device, ensure adequate ventilation in the immediate vicinity of the positioner. • All electronics installed in the device and the electronics of the option modules must have the following properties: – Suitable for type of protection "Ex ia", or "Ex db ia" in devices with flameproof enclosure (c = P) – Electrically connected to equipment with "Ex ia" type of protection		

Type of protection	Safety requirements
Ex d / XP Flameproof Enclosure	The gaps of the equipment are greater than the minimum values specified in Table 2 (IIC) of EN 60079-1.
	Repair work on the flameproof joints may only be carried out by the manufacturer.
	The components that you use with the device must: • Comply with the latest standards • Have up-to-date certificates • Meet the minimum requirements of the device Special safety requirement: Use only permissible blankng plugs to seal unused openings.
	The adapter inside the device is an integral component of the enclosure and the device protection concept. • Operating the device without the adapter is not permitted. • The screws installed on the adapter must be tightened and secured according to the manufacturer's specifications. • Operation of the External Position Transmitter 6DR4004-1ES ... 6DR4004-4ES is not permitted. • Operation of the Non-Contacting Sensor (NCS) 6DR4004-6N in conjunction with a flameproof enclosure is not permitted.
Ex t / DIP Dust Protection by Enclosure **Ex e / NI** Increased Safety	Mount the positioner in such a way that the enclosure and inspection window are protected from high mechanical impact energy.

7.1.6.4 Type designation

1	2	3	4	5	6	7	-	8	9	10	11	12	-	13	14	15	16	-				
6	D	R	5	a	.	**b**	-	0	**c**	d	e	f	-	g	.	.	h	-	Z	j	j	j

Enclosure variants					
6DR5 (b=0)	**6DR5 (b=1)**	**6DR5 (b=2)**	**6DR5 (b=3)**	**6DR5 (b=5)**	**6DR5 (b=6)**
Polycarbonate	**Aluminum SA**	**Stainless steel**	**Aluminum SA/DA**	**Aluminum**	**Stainless steel**
Explosion protection for explosive gases according to selection in type code index "c"					

Enclosure variants					
6DR5 (b=0)	**6DR5 (b=1)**	**6DR5 (b=2)**	**6DR5 (b=3)**	**6DR5 (b=5)**	**6DR5 (b=6)**
Polycarbonate	**Aluminum SA**	**Stainless steel**	**Aluminum SA/DA**	**Aluminum**	**Stainless steel**
Intrinsic Safety Ex i, IS if index c = E	Intrinsic Safety Ex i, IS if index c = E or F or K Increased Safety Ex e, NI if c = D or F or G or K			Intrinsic Safety Ex i, IS if index c = F or K or P Increased Safety Ex e, NI if c = F or G or K Flameproof Enclosure Ex d, XP if c = E or P	
Explosion protection for combustible dusts according to selection in type code index "c"					
Not applicable to polycarbonate enclosure	**Dust Explosion Protection by Intrinsic Safety Ex i, IS** if index c = E or F or K **Dust Explosion Protection by Enclosure Ex t, DIP** if c = D or K			**Dust Explosion Protection by Intrinsic Safety Ex i, IS** if index c = F or K **Dust Explosion Protection by Enclosure Ex t, DIP** if c = E or K or P	

7.1.6.5 Permissible options for hazardous areas

The following optional versions of the positioner are approved for use in hazardous areas, as described:

With Non-Contacting Sensor 6DR4004-6N	**With potentiometer 6DR4004-1ES**	**With iNCS 6DR4004-2ES**	**With iNCS and ILS 6DR4004-3ES**	**With iNCS and MLS 6DR4004-4ES**
 Potted electronics inside an enclosure. The cable has a fixed connection.	 Aluminum 6DR5..3 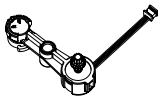 Potentiometer	 Aluminum 6DR5..3 iNCS 6DR4004-5LE	 Aluminium 6DR5..3 iNCS 6DR4004-5LE ILS 6DR4004-6G	 Aluminum 6DR5..3 iNCS 6DR4004-5LE MLS 6DR4004-6K

Abbreviations: Internal NCS module (iNCS), Inductive Limit Switches (ILS), Mechanic Limit Switches (MLS)

7.1.6.6 Markings for explosion protection

Type of protection and Ex marking ATEX, IECEx, EAC Ex, INMETRO

Dependent on the index in the article number 6DR5a.b-0cdef-g..h-Zjjj			**Ex marking ATEX, IECEx, INMETRO**	**Ex marking EAC Ex**
a	b	c		
0, 1, 2, 5, 6	1, 2, 3	D	II 3 G Ex ec IIC T6...T4 Gc[1)] II 2 D Ex tb IIIC T100°C Db	2Ex ec IIC T6...T4 Gc[1)] Ex tb IIIC T100°C Db
	0	E	II 2 G Ex ia IIC T6...T4 Gb II 3 G Ex ic IIC T6...T4 Gc	1Ex ia IIC T6...T4 Gb 2Ex ic IIC T6...T4 Gc
	1, 2, 3	E	II 2 G Ex ia IIC T6...T4 Gb II 3 G Ex ic IIC T6...T4 Gc II 2 D Ex ia IIIC T130°C Db	1Ex ia IIC T6...T4 Gb 2Ex ic IIC T6...T4 Gc Ex ia IIIC T130°C Db
	1, 2, 3, 5, 6	F	II 2 G Ex ia IIC T6...T4 Gb II 3 G Ex ic IIC T6...T4 Gc II 3 G Ex ec IIC T6...T4 Gc[1)] II 2 D Ex ia IIIC T130°C Db	1Ex ia IIC T6...T4 Gb 2Ex ic IIC T6...T4 Gc 2Ex ec IIC T6...T4 Gc[1)] Ex ia IIIC T130°C Db
		G	II 3 G Ex ec IIC T6...T4 Gc [1)]	2Ex ec IIC T6...T4 Gc [1)]
		K	II 2 G Ex ia IIC T6...T4 Gb II 3 G Ex ic IIC T6...T4 Gc II 3 G Ex ec IIC T6...T4 Gc[1)] II 2 D Ex ia IIIC T130°C Db II 2 D Ex tb IIIC T100°C Db	1Ex ia IIC T6...T4 Gb 2Ex ic IIC T6...T4 Gc 2Ex ec IIC T6...T4 Gc[1)] Ex ia IIIC T130°C Db Ex tb IIIC T100°C Db
	5, 6	P	II 2 G Ex db ia IIC T6...T4 Gb II 2 D Ex tb IIIC T100°C Db	1Ex db ia IIC T6...T4 Gb Ex tb IIIC T100°C Db
0, 1, 2, 3, 5, 6	5, 6	E	II 2 G Ex db IIC T6...T4 Gb II 2 D Ex tb IIIC T100°C Db	1Ex db IIC T6...T4 Gb Ex tb IIIC T100°C Db

[1)] Type of protection Ex e / NI is not permitted during operation with Mechanic Limit Switches (MLS) 6DR4004-6K.

Type of protection and Ex marking CSA, FM

Dependent on the index in the article number 6DR5a.b-0cdef-g..h-Zjjj			Ex marking CSA	Ex marking FM
a	b	c		
0, 1, 2, 5, 6	1, 2, 3	D	Ex ec IIC T6...T4 Gc[1)] NI Cl I Div 2 Gp A-D[1)] Ex tb IIIC T100°C Db DIP Cl II, III Div 1 Gp E-G	Cl I Zn 2 AEx ec IIC T6...T4 Gc[1)] NI Cl I Div 2 Gp A-D[1)] Zn 21 AEx tb IIIC T100°C Db DIP Cl II, III Div 1 Gp E-G
	0	E	Ex ia IIC T6...T4 Gb IS Cl I Div 1, 2 Gp A-D	Cl I Zn 1 AEx ia IIC T6...T4 Gb IS Cl I Div 1, 2 Gp A-D
	1, 2, 3	E	Ex ia IIC T6...T4 Gb IS Cl I Div 1, 2 Gp A-D Ex ia IIIC T130°C Db IS Cl II, III Div 1, 2 Gp E-G	Cl I Zn 1 AEx ia IIC T6...T4 Gb IS Cl I Div 1, 2 Gp A-D Zn 21 AEx ia IIIC T130°C Db IS Cl II, III Div 1, 2 Gp E-G
	1, 2, 3, 5, 6	F	Ex ia IIC T6...T4 Gb IS Cl I Div 1, 2 Gp A-D Ex ec IIC T6...T4 Gc[1)] NI Cl I Div 2 Gp A-D[1)] Ex ia IIIC T130°C Db IS Cl II, III Div 1, 2 Gp E-G	Cl I Zn 1 AEx ia IIC T6...T4 Gb IS Cl I Div 1, 2 Gp A-D Cl I Zn 2 AEx ec IIC T6...T4 Gc[1)] NI Cl I Div 2 Gp A-D[1)] Zn 21 AEx ia IIIC T130°C Db IS Cl II, III Div 1, 2 Gp E-G
		G	Ex ec IIC T6...T4 Gc [1)] NI Cl I Div 2 Gp A-D [1)]	Cl I Zn 2 AEx ec IIC T6...T4 Gc [1)] NI Cl I Div 2 Gp A-D [1)]
		K	Ex ia IIC T6...T4 Gb IS Cl I Div 1, 2 Gp A-D Ex ec IIC T6...T4 Gc[1)] NI Cl I Div 2 Gp A-D[1)] Ex ia IIIC T130°C Db IS Cl II, III Div 1, 2 Gp E-G Ex tb IIIC T100°C Db DIP Cl II, III Div 1 Gp E-G	Cl I Zn 1 AEx ia IIC T6...T4 Gb IS Cl I Div 1, 2 Gp A-D Cl I Zn 2 AEx ec IIC T6...T4 Gc[1)] NI Cl I Div 2 Gp A-D[1)] Zn 21 AEx ia IIIC T130°C Db IS Cl II, III Div 1, 2 Gp E-G Zn 21 AEx tb IIIC T100°C Db DIP Cl II, III Div 1 Gp E-G
	5, 6	P	Ex db ia IIC T6...T4 Gb XP IS Cl I Div 1 Gp C-D Ex tb IIIC T100°C Db DIP Cl II, III Div 1 Gp E-G	Cl I Zn 1 AEx db ia IIC T6...T4 Gb XP IS Cl I Div 1 Gp A-D Zn 21 AEx tb IIIC T100°C Db DIP Cl II, III Div 1 Gp E-G
0, 1, 2, 3, 5, 6	5, 6	E	Ex db IIC T6...T4 Gb XP Cl I Div 1 Gp C-D Ex tb IIIC T100°C Db DIP Cl II, III Div 1 Gp E-G	Cl I Zn 1 AEx db IIC T6...T4 Gb XP Cl I Div 1 Gp A-D Zn 21 AEx tb IIIC T100°C Db DIP Cl II, III Div 1 Gp E-G

[1)] Type of protection Ex e / NI is not permitted during operation with Mechanical Limit Switches (MLS) 6DR4004-6K.

Type of protection and Ex marking Position Transmitter and NCS

	Ex marking ATEX, IECEx	**Ex marking EAC Ex**
Option **Position Transmitter** 6DR4004-1ES 6DR4004-2ES 6DR4004-3ES	II 2 G Ex ia IIC T6...T4 Gb II 3 G Ex ic IIC T6...T4 Gc II 3 G Ex ec IIC T6...T4 Gc II 2 D Ex ia IIIC T130°C Db II 2 D Ex tb IIIC T100°C Db	1Ex ia IIC T6...T4 Gb 2Ex ic IIC T6...T4 Gc 2Ex ec IIC T6...T4 Gc Ex ia IIIC T130°C Db Ex tb IIIC T100°C Db
Option **Position Transmitter** 6DR4004-4ES	II 2 G Ex ia IIC T6...T4 Gb II 3 G Ex ic IIC T6...T4 Gc II 2 D Ex ia IIIC T130°C Db II 2 D Ex tb IIIC T100°C Db	1Ex ia IIC T6...T4 Gb 2Ex ic IIC T6...T4 Gc Ex ia IIIC T130°C Db Ex tb IIIC T100°C Db
Option **Non-contacting Sensor (NCS)** 6DR4004-6N	II 2 G Ex ia IIC T6...T4 Gb II 3 G Ex ic IIC T6...T4 Gc II 3 G Ex ec IIC T6...T4 Gc II 2 D Ex ia IIIC T130°C Db	1Ex ia IIC T6...T4 Gb 2Ex ic IIC T6...T4 Gc 2Ex ec IIC T6...T4 Gc Ex ia IIIC T130°C Db

	Ex marking CSA	**Ex marking FM**
Option **Position Transmitter** 6DR4004-1ES 6DR4004-2ES 6DR4004-3ES	Ex ia IIC T6...T4 Gb IS Cl I Div 1, 2 Gp A-D Ex ec IIC T6...T4 Gc NI Cl I Div 2 Gp A-D Ex ia IIIC T130°C Db IS Cl II, III Div 1, 2 Gp E-G Ex tb IIIC T100°C Db DIP Cl II, III Div 1 Gp E-G	Cl I Zn 1 AEx ia IIC T6...T4 Gb IS Cl I Div 1, 2 Gp A-D Cl I Zn 2 AEx ec IIC T6...T4 Gc NI Cl I Div 2 Gp A-D Zn 21 AEx ia IIIC T130°C Db IS Cl II, III Div 1, 2 Gp E-G Zn 21 AEx tb IIIC T100°C Db DIP Cl II, III Div 1 Gp E-G
Option **Position Transmitter** 6DR4004-4ES	Ex ia IIC T6...T4 Gb IS Cl I Div 1, 2 Gp A-D Ex ia IIIC T130°C Db IS Cl II, III Div 1, 2 Gp E-G Ex tb IIIC T100°C Db DIP Cl II, III Div 1 Gp E-G	Cl I Zn 1 AEx ia IIC T6...T4 Gb IS Cl I Div 1, 2 Gp A-D Zn 21 AEx ia IIIC T130°C Db IS Cl II, III Div 1, 2 Gp E-G Zn 21 AEx tb IIIC T100°C Db DIP Cl II, III Div 1 Gp E-G
Option **Non-Contacting Sensor (NCS)** 6DR4004-6N	Ex ia IIC T6...T4 Gb IS Cl I Div 1, 2 Gp A-D Ex ec IIC T6...T4 Gc NI Cl I Div 2 Gp A-D Ex ia IIIC T130°C Db IS Cl II, III Div 1, 2 Gp E-G	Cl I Zn 1 AEx ia IIC T6...T4 Gb IS Cl I Div 1, 2 Gp A-D Cl I Zn 2 AEx ec IIC T6...T4 Gc NI Cl I Div 2 Gp A-D Zn 21 AEx ia IIIC T130°C Db IS Cl II, III Div 1, 2 Gp E-G

7.1.6.7 Ambient temperature in hazardous areas

Maximal permissible ambient temperature ranges: Base unit

Electropneumatic positioner, Type 6DR5a.b-0cdef-g..h-Z jjj **With types of protection Ex d (XP) and Ex i (IS) and Ex d+i (XP, IS) if (c = P) and Ex e (NI)** **Hazard due to flammable gases:**		
Criteria dependent on article number	Temperature class T4	Temperature class T6
• No limitations for the full range of Ex-tested equipment features	-30 °C ≤ Ta ≤ +80 °C	-30 °C ≤ Ta ≤ +50 °C
• Lowest operating temperature (-40 °C); then order suffix Z = M40 • This ambient temperature is not permitted for the polycarbonate enclosure 6DR5..0. I.e. b ≠ 0	-40 °C ≤ Ta ≤ +80 °C	-40 °C ≤ Ta ≤ +50 °C
• Temperature class T6 ≤ +60 °C: – Only allowed for HART or non-HART electronics 6DR50, 6DR51, 6DR52, (a = 0, 1, 2) – Not permitted for the AOM module 6DR4004-6J, (f ≠ 1, 3) – Not permitted for the internal NCS module 6DR4004-5LE (Z ≠ L1A)	-30 °C ≤ Ta ≤ +80 °C	-30 °C ≤ Ta ≤ +60 °C
• Lowest operating temperature (-40 °C), then order suffix Z = M40 • Not permitted for the polycarbonate enclosure 6DR5..0, (b ≠ 0) • Temperature class T6 ≤ +60 °C: – Only allowed for HART or non-HART electronics 6DR50, 6DR51, 6DR52, (a = 0, 1, 2) – Not permitted for the AOM module 6DR4004-6J, (f ≠ 1, 3) – Not permitted for the internal NCS module 6DR4004-5LE (Z ≠ L1A)	-40 °C ≤ Ta ≤ +80 °C	-40 °C ≤ Ta ≤ +60 °C

Electropneumatic positioner, Type 6DR5a.b-0cdef-g..h-Z jjj **With types of protection Ex t (DIP) and Ex i (IS)** **Hazard due to combustible dust**	
Criteria dependent on article number	Maximum permissible ambient temperatures
• Not permitted for polycarbonate enclosure 6DR5..0, (b ≠ 0)	-30 °C ≤ Ta ≤ +80 ° C
• Lowest operating temperature (-40 °C); then order suffix Z = M40 • Not permitted for polycarbonate enclosure 6DR5..0, (b ≠ 0)	-40 °C ≤ Ta ≤ +80 ° C

Maximal permissible ambient temperature ranges: Option Position Transmitter, NCS

Option Position Transmitter **With types of protection Ex i (IS), Ex e (NI)** **Hazard due to flammable gases**		
	Temperature class T4	Temperature class T6
6DR4004-1ES	-40 °C ≤ Ta ≤ +90 °C	-40 °C ≤ Ta ≤ +60 °C
6DR4004-2ES 6DR4004-3ES 6DR4004-4ES		-40 °C ≤ Ta ≤ +50 °C

Option Non-Contacting Sensor (NCS) **With types of protection Ex i (IS), Ex e (NI)** **Hazard due to flammable gases**		
	Temperature class T4	Temperature class T6
6DR4004-6N	-40 °C ≤ Ta ≤ +90 °C	-40 °C ≤ Ta ≤ +70 °C

Option Position Transmitter **With types of protection Ex t (DIP), Ex i (IS)** **Hazard due to combustible dust**	
6DR4004-1ES 6DR4004-2ES 6DR4004-3ES 6DR4004-4ES	-40 °C ≤ Ta ≤ +80 °C

Option Non-Contacting Sensor (NCS) **With type of protection Ex i (IS)** **Hazard due to combustible dust**	
6DR4004-6N	-40 °C ≤ Ta ≤ +80 °C

7.1.6.8 Maximum permissible electric characteristic values

Base unit

Note

For the EU type examination certificate and its application areas, non-certified intrinsically safe circuits for the utilized type of protection Ex ic can be connected.

Electronics, 6DR50... 2-wire, 4 ... 20 mA, without HART 4 alternative markings on the electronics: C73451-A430-L250 - A5E49830025 - A5E51252080 (under protective layer) - A5E52161392 (under protective layer)					
Auxiliary power/control current 4 ... 20 mA • Terminals 6(+) and 7/8(-) if electronics C73451-A430-L250 or A5E51252080 (under protective layer) • Terminals 6(+) and 7(-) if electronics A5E49830025 or A5E52161392 (under protective layer)	**Type of protection: Ex ia or Ex db ia if (c = P)** For connection to certified intrinsically safe circuits. Maximum values:				
	U_i	I_i	P_i	C_i	L_i
	30 V	100 mA	1 W	11 nF	209 µH
	Type of protection: Ex ic Only for connection to certified intrinsically safe circuits. Maximum values:				
	U_i	I_i		C_i	L_i
	30 nF	100 mA		11 nF	209 µH
	Type of protection: Ex ec or Ex tb For connection to circuits with the following maximum values in normal operation.				
	U_n	I_n			
	30 V	100 mA			
Digital input galvanically connected to auxiliary power/control current • Terminals 9(+) and 10(-) • Bridged or connection to a switching contact					

Electronics, 6DR51... 2-wire, 4 ... 20 mA, HART Marking on the electronics: A5E50576243, A5E52164428 (under protective layer)					
Auxiliary power/control current 4 ... 20 mA • Terminals 6(+) and 7(-)	**Type of protection: Ex ia or Ex db ia if (c = P)** For connection to certified intrinsically safe circuits. Maximum values:				
	U_i	I_i	P_i	C_i	L_i
	30 V	100 mA	1 W	11 nF	209 µH
	Type of protection: Ex ic For connection to certified intrinsically safe circuits. Maximum values:				
	C_i	I_i		C_i	L_i
	30 V	100 mA		11 nF	209 µH
	Type of protection: Ex ec or Ex tb For connection to circuits with the following maximum values in normal operation.				
	U_n	I_n			
	30 V	100 mA			
Digital input galvanically connected to auxiliary power/control current • Terminals 9(+) and 10(-) • Bridged or connection to a switching contact					

Electronics, 6DR51... and Z P01 or P02
2-wire, 4...20 mA, HART, premium diagnostics
Marking on the electronics: A5E43471155 or A5E51252102 (under protective layer)

Auxiliary power/control current 4...20 mA

- Terminals 6(+) and 7(-)

Type of protection: Ex ia or Ex db ia if (c = P)
For connection to certified intrinsically safe circuits.
Maximum values:

U_i	I_i	P_i	C_i	L_i
30 V	100 mA	1 W	12,2 nF	105 µH

Type of protection: Ex ic
For connection to certified intrinsically safe circuits.
Maximum values:

C_i	I_i		C_i	L_i
30 V	100 mA		12,2 nF	105 µH

Type of protection: Ex ec or Ex tb
For connection to circuits with the following maximum values in normal operation.

U_n	I_n
30 V	100 mA

Digital input galvanically connected to auxiliary power/control current

- Terminals 9(+) and 10(-)
- Bridged or connection to a switching contact

Electronics 6DR52...
2, 3 or 4-wire, 4 ... 20 mA, with HART
Marking on the electronics: C73451-A430-L200 or A5E44298157 (under protective layer)

Auxiliary power/control current 4 ... 20 mA

- Bridged between terminals 6 and 4/5
- Control current connection terminals 3(+) and 7/8(-)

3/4-wire base unit with HART

- Auxiliary power supply 18...30 V
- Terminals 2(+) and 4/5(-)

Control current 4...20 mA

- Terminals 6(+) and 7/8(-)
- 4-wire: Auxiliary power supply and control current electrically isolated
- 3-wire: Common base point terminals 4/5 and 7/8

Type of protection: Ex ia or Ex db ia if (c = P)
For connection to certified intrinsically safe circuits.
Maximum values:

U_i	I_i	P_i	C_i	L_i
30 V	100 mA	1 W	11 nF	312 µH

Type of protection: Ex ic
For connection to certified intrinsically safe circuits.
Maximum values:

U_i	I_i		C_i	L_i
30 V	100 mA		11 nF	312 µH

Type of protection: Ex ec or Ex tb
For connection to circuits with the following maximum values in normal operation.

U_n	I_n
30 V	100 mA

Digital input galvanically connected to auxiliary power / control current

- Terminals 9(+) and 10(-)
- Bridged or connection to a switching contact

Electronics 6DR55, 6DR56 **PROFIBUS PA, 6DR55...** **Marking on the electronics: A5E00095037 or A5E44541826 (under protective layer)** **FOUNDATION Fieldbus, 6DR56...** **Marking on the electronics: A5E00164801 or A5E51252093 (under protective layer)** **PROFIBUS PA and premium diagnostics, 6DR55... and -Z P01 or P02** **Marking on the electronics: A5E46096490** **FOUNDATION Fieldbus and premium diagnostics, 6DR56... and -Z P01 or P02** **Marking on the electronics: A5E46096819**					
Bus circuit • Terminals 6(+) and 7(-)	**Type of protection: Ex ia or Ex db ia if (c = P)** For connection to a certified FISCO supply unit. Maximum values:				
	U_i	I_i	P_i	C_i	L_i
	17,5 V	380 mA	5,32 W	(*1	8 µH
	Type of protection: Ex ia or Ex db ia if (c = P) For supply to certified intrinsically safe circuits. Maximum values:				
	U_i	I_i	P_i	C_i	L_i
	24 V	250 mA	1,2 W	(*1	8 µH
	Type of protection: Ex ic For supply with a FISCO supply unit. Maximum values:				
	U_i	I_i		C_i	L_i
	17,5 V	570 mA		(*1	8 µH
	Type of protection: Ex ic For supply to certified intrinsically safe circuits. Maximum values:				
	U_i			C_i	L_i
	32 V			(*1	8 µH
	Type of protection: Ex ec or Ex tb For connection to circuits with the following maximum values in normal operation.				
	U_n	I_n			
	30 V	100 mA			

<table>
<tr><td colspan="2">Electronics 6DR55, 6DR56
PROFIBUS PA, 6DR55...
Marking on the electronics: A5E00095037 or A5E44541826 (under protective layer)
FOUNDATION Fieldbus, 6DR56...
Marking on the electronics: A5E00164801 or A5E51252093 (under protective layer)
PROFIBUS PA and premium diagnostics, 6DR55... and -Z P01 or P02
Marking on the electronics: A5E46096490
FOUNDATION Fieldbus and premium diagnostics, 6DR56... and -Z P01 or P02
Marking on the electronics: A5E46096819</td></tr>
<tr><td rowspan="8">Input for approaching the safety-limited position
• Terminals 81(+) and 82(-)
• Galvanically isolated from bus circuit and digital input</td><td>Type of protection: Ex ia or Ex db ia if (c = P)
For connection to certified intrinsically safe circuits.
Maximum values:</td></tr>
<tr><td>
<table>
<tr><td>U_i</td><td>I_i</td><td>P_i</td><td>C_i</td><td>L_i</td></tr>
<tr><td>30 V</td><td>100 mA</td><td>1 W</td><td>(*1</td><td>(*1</td></tr>
</table>
</td></tr>
<tr><td>Type of protection: Ex ic
For connection to certified intrinsically safe circuits.
Maximum values:</td></tr>
<tr><td>
<table>
<tr><td>U_i</td><td>I_i</td><td rowspan="2"></td><td>C_i</td><td>L_i</td></tr>
<tr><td>30 V</td><td>100 mA</td><td>(*1</td><td>(*1</td></tr>
</table>
</td></tr>
<tr><td>Type of protection: Ex ec or Ex tb
For connection to circuits with the following maximum values in normal operation.</td></tr>
<tr><td>
<table>
<tr><td>U_n</td><td>I_n</td><td rowspan="2"></td></tr>
<tr><td>30 V</td><td>100 mA</td></tr>
</table>
</td></tr>
<tr><td>Digital input galvanically connected to auxiliary power / control current
• Terminals 9(+) and 10(-)
• Bridged or connection to a switching contact</td><td></td></tr>
</table>

(*1 = values negligibly small

Digital I/O Module (DIO)

Option: Digital I/O Module (DIO) 6DR4004-6A, installed in positioner 6DR5...-0..1...					
Digital outputs • Terminals 31(+) and 32(-) 41(+) and 42(-) 51(+) and 52(-) • Safely galvanically isolated from all other circuits	**Type of protection: Ex ia or Ex db ia if (c = P)** For connection to certified intrinsically safe circuits. Maximum values:				
	U_i	I_i	P_i	C_i	L_i
	15 V	25 mA	64 mW	5.2 nF	(*1
	Type of protection: Ex ic Only for connection to certified intrinsically safe circuits. Maximum values:				
	C_i	I_i		C_i	L_i
	15 V	25 mA		5.2 nF	(*1
	Type of protection: Ex ec or Ex tb For connection to circuits with the following maximum values in normal operation.				
	U_n	I_n			
	15 V	25 mA			
Digital inputs • Terminals 11(+) and 12(-) • Safely galvanically isolated from all other circuits	**Type of protection: Ex ia, EX ic or Ex db ia if (c = P)** For connection to certified intrinsically safe circuits. Maximum values:				
	U_i			C_i	L_i
	25.2 V			(*1	(*1
	U_n				
	25.2 V				
Digital input galvanically connected to auxiliary power/ control current • Terminals 21(+) and 22(-) • Bridged or connection to a switching contact					

(*1 = Values negligibly small

Digital I/O modules (DIO-2)

Option: Digital I/O module, marked with DIO-2, Type 6DR4004-6A, A5E52635850, installed in positioner 6DR5...-0..1...					
Digital outputs • Terminals 31(+) and 32(-) 41(+) and 42(-) 51(+) and 52(-) • Safely galvanically isolated from all other circuits	**Type of protection: Ex ia or Ex db ia if (c = P)** For connection to certified intrinsically safe circuits. Maximum values:				
	U_i	I_i	P_i	C_i	L_i
	17.5 V	100 mA	250 mW	5.2 nF	(*1
	Type of protection: Ex ic For connection to certified intrinsically safe circuits. Maximum values:				
	C_i	I_i		C_i	L_i
	17.5 V	100 mA		5.2 nF	(*1
	Type of protection: Ex ec or Ex tb For connection to circuits with the following maximum values in normal operation.				
	U_n	I_n			
	17.5 V	100 mA			
Digital inputs • Terminals 11(+) and 12(-) • Safely galvanically isolated from all other circuits	**Type of protection: Ex ia, EX ic or Ex db ia if (c = P)** For connection to certified intrinsically safe circuits. Maximum values:				
	U_i			C_i	L_i
	32 V			(*1	(*1
	Type of protection: Ex ec or Ex tb For connection to circuits with the following maximum values in normal operation.				
	U_n				
	32 V				
Digital input galvanically connected to auxiliary power/ control current • Terminals 21(+) and 22(-) • Bridged or connection to a switching contact					

(*1 = values negligibly small

Inductive Limit Switches (ILS)

Option: Inductive Limit Switches (ILS) 6DR4004-6G, installed in positioner 6DR5...-0..2...					
Digital output (fault message output) • Terminals 31(+) and 32(-)	**Type of protection: Ex ia or Ex db ia if (c = P)** Only for connection to certified intrinsically safe circuits. Maximum values:				
	U_i	I_i	P_i	C_i	L_i
	15 V	25 mA	64 mW	5.2 nF	(*1
	Type of protection: Ex ic For connection to certified intrinsically safe circuits. Maximum values:				
	U_i	I_i		C_i	L_i
	15 V	25 mA		5.2 nF	(*1
	Type of protection: Ex ec or Ex tb For connection to circuits with the following maximum values in normal operation. Maximum values:				
	U_n	I_n			
	15 V	25 mA			
Digital outputs (slotted initiators) Terminals • 41(+) and 42(-) • 51(+) and 52(-)	**Type of protection: Ex ia, EX ic or Ex db ia if (c = P)** For connection to certified intrinsically safe circuits. Maximum values:				
	U_i	I_i	P_i	C_i	L_i
	15 V	25 mA	64 mW	36 nF	100 µH
	Type of protection: Ex ec or Ex tb For connection to circuits with the following maximum values in normal operation.				
	U_n	I_n			
	15 V	25 mA			

(*1 = values negligibly small

Inductive Limit Switches (ILS-2)

Option: Inductive Limit Switches, marked with ILS-2, 6DR4004-6G, A5E52635888, installed in positioner 6DR5...-0..2...					
Digital output (fault message output) • Terminals 31(+) and 32(-)	**Type of protection: Ex ia or Ex db ia if (c = P)** Only for connection to certified intrinsically safe circuits. Maximum values:				
	U_i	I_i	P_i	C_i	L_i
	17.5 V	100 mA	250 mW	5.2 nF	(*1
	Type of protection: Ex ic Only for connection to certified intrinsically safe circuits. Maximum values:				
	U_i	I_i		C_i	L_i
	17.5 V	100 mA		5.2 nF	(*1
	Type of protection: Ex ec or Ex tb For connection to circuits with the following maximum values in normal operation. Maximum values:				
	U_n	I_n			
	17.5 V	100 mA			
Digital outputs (slotted initiators) Terminals • 41(+) and 42(-) • 51(+) and 52(-)	**Type of protection: Ex ia, EX ic or Ex db ia if (c = P)** For connection to certified intrinsically safe circuits. Maximum values:				
	U_i	I_i	P_i	C_i	L_i
	16 V	25 mA	64 mW	36 nF	100 µH
	Type of protection: Ex ec or Ex tb For connection to circuits with the following maximum values in normal operation.				
	U_n	I_n			
	16 V	25 mA			

(*1 = values negligibly small

Mechanic Limit Switches (MLS)

Option: Mechanic Limit Switches (MLS) 6DR4004-6K, installed in positioner 6DR5...-0..3...					
Digital output (fault message output) • Terminals 31(+) and 32(-)	**Type of protection: Ex ia or Ex db ia if (c = P)** For connection to certified intrinsically safe circuits. Maximum values:				
	U_i	I_i	P_i	C_i	L_i
	15 V	25 mA	64 mW	5.2 nF	(*1
	Type of protection: Ex ic For connection to certified intrinsically safe circuits. Maximum values:				
	U_i	I_i		C_i	L_i
	15 V	25 mA		5.2 nF	(*1
	Type of protection: Ex tb For connection to circuits with the following maximum values in normal operation.				
	U_n	I_n			
	15 V	25 mA			
Digital outputs Terminals • 41(+) and 42(-) • 51(+) and 52(-)	**Type of protection: Ex ia or Ex db ia if (c = P)** For connection to certified intrinsically safe circuits. Maximum values:				
	U_i	I_i	P_i	C_i	L_i
	30 V	100 mA	750 mW	(*1	(*1
	Type of protection: Ex ic For connection to certified intrinsically safe circuits. Maximum values:				
	U_i	I_i		C_i	L_i
	30 V	100 mA		(*1	(*1
	Type of protection: Ex tb For connection to circuits with the following maximum values in normal operation.				
	U_n	I_n			
	30 V	100 mA			

(*1 = values negligibly small

Mechanic Limit Switches (MLS-2)

Option: Mechanic Limit Switches, marked with MLS-2, Type 6DR4004-6K, A5E52659309, installed in positioner 6DR5...-0..3...					
Digital output (fault message output) • Terminals 31(+) and 32(-)	**Type of protection: Ex ia or Ex db ia if (c = P)** For connection to certified intrinsically safe circuits. Maximum values:				
	U_i	I_i	P_i	C_i	L_i
	17.5 V	100 mA	250 mW	5.2 nF	(*1
	Type of protection: Ex ic For connection to certified intrinsically safe circuits. Maximum values:				
	U_i	I_i		C_i	L_i
	17.5 V	100 mA		5.2 nF	(*1
	Type of protection: Ex tb For connection to circuits with the following maximum values in normal operation.				
	U_n	I_n			
	17.5 V	100 mA			
Digital outputs Terminals • 41(+) and 42(-) • 51(+) and 52(-)	**Type of protection: Ex ia or Ex db ia if (c = P)** For connection to certified intrinsically safe circuits. Maximum values:				
	U_i	I_i	P_i	C_i	L_i
	30 V	100 mA	750 mW	(*1	(*1
	Type of protection: Ex ic For connection to certified intrinsically safe circuits. Maximum values:				
	U_i	I_i		C_i	L_i
	30 V	100 mA		(*1	(*1
	Type of protection: Ex tb For connection to circuits with the following maximum values in normal operation.				
	U_n	I_n			
	30 V	100 mA			

(*1 = values negligibly small

Analog Output Module (AOM)

Option: Analog Output Module (AOM) 6DR4004-6J, installed in positioner 6DR5...-0...1 or 3					
Current output terminals • 61(+) and 62(-) • Safely galvanically isolated from all other circuits	**Type of protection: Ex ia or Ex db ia if (c = P)** For connection to certified intrinsically safe circuits. Maximum values:				
	U_i	I_i	P_i	C_i	L_i
	30 V	100 mA	1 W	2 nF	(*1
	Type of protection: Ex ic For connection to certified intrinsically safe circuits. Maximum values:				
	U_i	I_i		C_i	L_i
	30 V	100 mA		2 nF	(*1
	Type of protection: Ex ec or Ex tb For connection to circuits with the following maximum values in normal operation**.**				
	U_n	I_n			
	30 V	100 mA			

(*1 = values negligibly small

Internal NCS module (iNCS)

Option: Internal NCS module (iNCS), 6DR4004-5LE					
Power supply and signal circuits electrically connected to the base unit	**Type of protection: Ex ia or Ex db ia if (c = P)** For connection to certified intrinsically safe circuits. Maximum values:				
	U_i	I_i	P_i	C_i	L_i
	5 V	160 mA	120 mW	110 nF	270 µH
	Type of protection: Ex ic For connection to certified intrinsically safe circuits. Maximum values:				
	U_i	I_i	P_i	C_i	L_i
	5 V	160 mA	-	110 nF	270 µH
	Type of protection: Ex ec or Ex tb For connection to circuits with the following maximum values in normal operation.				
	U_n	I_n	-		
	5 V	160 mA			

Analog Input Module (AIM)

Option: Analog Input Module (AIM), 6DR4004-6F, installed in positioner 6DR5...-0...2 or 3					
Connection module with filter elements Module is used for connection to the following Position Transmitter versions: 6DR4004-1ES or 6DR4004-2ES or 6DR4004-3ES or 6DR4004-4ES (only Ex ia, Ex ic, Ex db ia, Ex tb) or 6DR4004-6N	**Type of protection: Ex ia or Ex ic or Ex db ia if (c = P)** Power is supplied by the base unit with PROFIBUS PA (6DR55) or FOUNDATION Fieldbus (6DR56). For connection to certified intrinsically safe circuits. Maximum values:				
	U_o	I_o	P_o	C_o	L_o
	5 V	Static: 75 mA Short-term: 160 mA	120 mW	1 µF	1 mH
	Type of protection: Ex ia or Ex ic or Ex db ia if (c = P) For supply by the other base units (6DR50/1/2/3). For connection to certified intrinsically safe circuits. Maximum values:				
	U_o	I_o	P_o	C_o	L_o
	5 V	100 mA	33 mW	1 µF	1 mH
	Type of protection: Ex ec or Ex tb For connection to circuits with the following maximum values in normal operation.				
	U_{max}				
	5 V				

Position Transmitter

Position Transmitter 6DR4004-1ES

Option: Position Transmitter 6DR4004-1ES **Includes an analog potentiometer**				
Power supply and signal circuits electrically connected to the basic unit	**Type of protection: Ex ia or Ex ic** For connection to certified intrinsically safe circuits. Maximum values:			
	U_i		C_i	L_i
	5 V		10 nF	240 µH
	Type of protection: Ex ec or Ex tb For connection to circuits with the following maximum values in normal operation.			
	U_n			
	5 V			

Position Transmitter 6DR4004-2ES

Option: Position Transmitter (NCS) 6DR4004-2ES **Internal NCS module 6DR4004-5LE included**					
Power supply and signal circuits galvanically connected to the basic unit	**Type of protection: Ex ia or Ex ic** For connection to certified intrinsically safe circuits. Maximum values:				
	U_i	I_i		C_i	L_i
	5 V	160 mA		110 nF	270 µH
	Type of protection: Ex ec or Ex tb For connection to circuits with the following maximum values in normal operation.				
	U_n	I_n			
	5 V	160 mA			

Position Transmitter 6DR4004-3ES

Option: Position Transmitter 6DR4004-3ES **Internal NCS module 6DR4004-5LE and Inductive Limit Switches (ILS) 6DR4004-6G**					
Internal NCS module 6DR4004-5LE • Power supply and signal circuits electrically connected to the basic unit	**Type of protection: Ex ia** For connection to certified intrinsically safe circuits. Maximum values:				
	U_i	I_i	P_i	C_i	L_i
	5 V	160 mA	120 mW	110 nF	270 µH
	Type of protection: Ex ic For connection to certified intrinsically safe circuits.				
	U_i	I_i	P_i	C_i	L_i
	5 V	160 mA	-	110 nF	270 µH
	Type of protection: Ex ec or Ex tb For connection to circuits with the following maximum values in normal operation.				
	U_n	I_n			
	5 V	160 mA			
Inductive Limit Switches (ILS) 6DR4004-6G Digital output (fault message output) • Terminals 31(+) and 32(-) • Power supply and signal circuits electrically connected to the basic unit	**Type of protection: Ex ia** Only for connection to certified intrinsically safe circuits. Maximum values:				
	U_i	I_i	P_i	C_i	L_i
	15 V	25 mA	64 mW	5.2 nF	(*1
	Type of protection: Ex ic For connection to certified intrinsically safe circuits. Maximum values:				
	U_i	I_i	P_i	C_i	L_i
	15 V	25 mA	-	5.2 nF	(*1
	Type of protection: Ex ec or Ex tb For connection to circuits with the following maximum values in normal operation.				
	U_n	I_n			
	15 V	25 mA			

Option: Position Transmitter 6DR4004-3ES **Internal NCS module 6DR4004-5LE and Inductive Limit Switches (ILS) 6DR4004-6G**					
Inductive Limit Switches (ILS) 6DR4004-6G Digital outputs (slotted initiators) Terminals • 41(+) and 42(-) • 51(+) and 52(-)	**Type of protection: Ex ia or Ex ic** For connection to certified intrinsically safe circuits. Maximum values:				
	U_i	I_i	P_i	C_i	L_i
	15 V	25 mA	64 mW	36 nF	100 µH
	Type of protection: Ex ec or Ex tb For connection to circuits with the following maximum values in normal operation.				
	U_n	I_n			
	15 V	25 mA			

(*1: Values negligibly small

Option: Position Transmitter 6DR4004-3ES **Internal NCS module 6DR4004-5LE and Inductive Limit Switches (ILS-2) 6DR4004-6G, A5E5263588**					
Internal NCS module 6DR4004-5LE • Power supply and signal circuits electrically connected to the basic unit	**Type of protection: Ex ia** For connection to certified intrinsically safe circuits. Maximum values:				
	U_i	I_i	P_i	C_i	L_i
	5 V	160 mA	120 mW	110 nF	270 µH
	Type of protection: Ex ic For connection to certified intrinsically safe circuits.				
	U_i	I_i	P_i	C_i	L_i
	5 V	160 mA	-	110 nF	270 µH
	Type of protection: Ex ec or Ex tb For connection to circuits with the following maximum values in normal operation.				
	U_n	I_n			
	5 V	160 mA			
Inductive Limit Switches (ILS-2) 6DR4004-6G Digital output (fault message output) • Terminals 31(+) and 32(-) • Power supply and signal circuits electrically connected to the basic unit	**Type of protection: Ex ia** Only for connection to certified intrinsically safe circuits. Maximum values:				
	U_i	I_i	P_i	C_i	L_i
	17.5 V	100 mA	250 mW	5.2 nF	(*1
	Type of protection: Ex ic Only for connection to certified intrinsically safe circuits. Maximum values:				
	U_i	I_i	P_i	C_i	L_i
	17.5 V	100 mA	-	5.2 nF	(*1
	Type of protection: Ex ec or Ex tb For connection to circuits with the following maximum values in normal operation.				
	U_n	I_n			
	17.5 V	100 mA			

Option: Position Transmitter 6DR4004-3ES **Internal NCS module 6DR4004-5LE and Inductive Limit Switches (ILS-2) 6DR4004-6G, A5E5263588**					
Inductive Limit Switches (ILS-2) 6DR4004-6G Digital outputs (slotted initiators) Terminals • 41(+) and 42(-) • 51(+) and 52(-)	**Type of protection: Ex ia or Ex ic** For connection to certified intrinsically safe circuits. Maximum values:				
	U_i	I_i	P_i	C_i	L_i
	16 V	25 mA	64 mW	36 nF	100 µH
	Type of protection: Ex ec or Ex tb For connection to circuits with the following maximum values in normal operation.				
	U_n	I_n			
	16 V	25 mA			

(*1: Values negligibly small

Position Transmitter 6DR4004-4ES

Option: Position Transmitter 6DR4004-4ES **Internal NCS module 6DR4004-5LE and Mechanic Limit Switches (MLS) 6DR4004-6K**					
Internal NCS module 6DR4004-5LE • Power supply and signal circuits electrically connected to the basic unit	**Type of protection: Ex ia** For connection to certified intrinsically safe circuits. Maximum values:				
	U_i	I_i	P_i	C_i	L_i
	5 V	160 mA	120 mW	110 nF	270 µH
	Type of protection: Ex ic For connection to certified intrinsically safe circuits. Maximum values:				
	U_i	I_i	P_i	C_i	L_i
	5 V	160 mA	-	110 nF	270 µH
	Type of protection: Ex ec or Ex tb For connection to circuits with the following maximum values in normal operation.				
	U_n	I_n			
	5 V	160 mA			

Option: Position Transmitter 6DR4004-4ES **Internal NCS module 6DR4004-5LE and Mechanic Limit Switches (MLS) 6DR4004-6K**					
Mechanic Limit Switches (MLS) 6DR4004-6K Digital output (error signal) Terminals • 31(+) and 32(-) • Power supply and signal circuits electrically connected to the basic unit	**Type of protection: Ex ia** For connection to certified intrinsically safe circuits. Maximum values:				
	U_i	I_i	P_i	C_i	L_i
	15 V	25 mA	64 mW	5.2 nF	(*1
	Type of protection: Ex ic For connection to certified intrinsically safe circuits. Maximum values:				
	U_i	I_i	P_i	C_i	L_i
	15 V	25 mA	-	5,2 nF	(*1
	Type of protection: Ex tb For connection to circuits with the following maximum values in normal operation.				
	U_n	I_n			
	15 V	25 mA			
Mechanic Limit Switches (MLS) 6DR4004-6K Digital outputs Terminals • 41(+) and 42(-) • 51(+) and 52(-)	**Type of protection: Ex ia** For connection to certified intrinsically safe circuits. Maximum values:				
	U_i	I_i	P_i	C_i	L_i
	30 V	100 mA	750 mW	(*1	(*1
	Type of protection: Ex ic For connection to certified intrinsically safe circuits. Maximum values:				
	U_i	I_i	P_i	C_i	L_i
	30 V	100 mA	-	(*1	(*1
	Type of protection: Ex tb For connection to circuits with the following maximum values in normal operation.				
	U_n	I_n			
	30 V	100 mA			

(*1: Values negligibly small

Option: Position Transmitter 6DR4004-4ES **Internal NCS module 6DR4004-5LE and Mechanic Limit Switches (MLS-2) 6DR4004-6K, A5E52659309**					
Internal NCS module 6DR4004-5LE • Power supply and signal circuits electrically connected to the basic unit	**Type of protection: Ex ia** For connection to certified intrinsically safe circuits. Maximum values:				
	U_i	I_i	P_i	C_i	L_i
	5 V	160 mA	120 mW	110 nF	270 µH
	Type of protection: Ex ic For connection to certified intrinsically safe circuits. Maximum values:				
	U_i	I_i	P_i	C_i	L_i
	5 V	160 mA	-	110 nF	270 µH
	Type of protection: Ex ec or Ex tb For connection to circuits with the following maximum values in normal operation.				
	U_n	I_n			
	5 V	160 mA			
Mechanic Limit Switches (MLS-2) 6DR4004-6K Digital output (error signal) Terminals • 31(+) and 32(-) • Power supply and signal circuits electrically connected to the basic unit	**Type of protection: Ex ia** For connection to certified intrinsically safe circuits. Maximum values:				
	U_i	I_i	P_i	C_i	L_i
	17.5 V	25 mA	64 mW	5.2 nF	(*1
	Type of protection: Ex ic For connection to certified intrinsically safe circuits. Maximum values:				
	U_i	I_i	P_i	C_i	L_i
	17.5 V	25 mA	-	5.2 nF	(*1
	Type of protection: Ex tb For connection to circuits with the following maximum values in normal operation.				
	U_n	I_n			
	17.5 V	25 mA			

Option: Position Transmitter 6DR4004-4ES **Internal NCS module 6DR4004-5LE and Mechanic Limit Switches (MLS-2) 6DR4004-6K, A5E52659309**					
Mechanic Limit Switches (MLS-2) 6DR4004-6K Digital outputs Terminals • 41(+) and 42(-) • 51(+) and 52(-)	**Type of protection: Ex ia** For connection to certified intrinsically safe circuits. Maximum values:				
	U_i	I_i	P_i	C_i	L_i
	30 V	100 mA	750 mW	(*1	(*1
	Type of protection: Ex ic For connection to certified intrinsically safe circuits. Maximum values:				
	U_i	I_i	P_i	C_i	L_i
	30 V	100 mA		(*1	(*1
	Type of protection: Ex tb For connection to circuits with the following maximum values in normal operation.				
	U_n	I_n			
	30 V	100 mA			

(*1: Values negligibly small

Non-Contacting Sensor (NCS)

Option: Non-Contacting Sensor (NCS) 6DR4004-6N					
Power supply and signal circuits electrically connected to the base unit	**Type of protection: Ex ia or Ex ic** For connection to certified intrinsically safe circuits. Maximum values:				
	U_i	I_i	P_i	C_i	L_i
	5 V	160 mA	120 mW	(*2	(*3
	Type of protection: Ex ec or Ex tb For connection to circuits with the following maximum values in normal operation.				
	U_n	I_n			
	5 V	160 mA			

(*1: Values negligibly small
(*2: Ci = 110 nF + (690 pF/m) of the connecting cable
(*3: Li = 270 µH + (6.53 µH/m) of the connecting cable

Maximum permissible connected loads in type of protection Ex db (XP) **Hazard due to combustible gases**		
Enclosure type (b = 5, 6) Type of explosion protection: Ex db, (c = E)	**Type of protection: Ex db** For connection to circuits with the following maximum values:	
	Umax	Pmax
	35 V	2.5 W

7.2 With 4 to 20 mA/HART

7.2.1 Electrical data

	Electronics without explosion protection	Electronics with explosion protection Ex "db"	Electronics with explosion protection Ex "ia", "db ia"	Electronics with explosion protection Ex "ic", "ec", "tb"
Current input I_W				
Rated signal range	4 ... 20 mA			
Test voltage	840 V DC, 1 s			
Digital input DI1 (terminals 9/10; galvanically connected to basic device)	Suitable only for floating contact; max. contact load < 5 µA at 3 V			
2-wire connection 6DR50.. and 6DR53.. 4 ... 20 mA 6DR51.. and 6DR52.. HART				
Current to maintain the auxiliary power	≥ 3.8 mA			
Required load voltage U_B (corresponds to Ω at 20 mA)				
• 6DR50.0/1/2/3				
Typical	6.36 V (= 318 Ω)	6.36 V (= 318 Ω)	7.8 V (= 390 Ω)	7.8 V (= 390 Ω)
Max.	6.53 V (= 327 Ω)	6.53 V (= 327 Ω)	8.3 V (= 415 Ω)	8.3 V (= 415 Ω)
• 6DR50.5/6				
Typical	8.25 V (= 413 Ω)	8.25 V (= 413 Ω)	7.9 V (= 395 Ω)	7.9 V (= 395 Ω)
Max.	8.8 V (= 440 Ω)	8.8 V (= 440 Ω)	8.5 V (= 425 Ω)	8.5 V (= 425 Ω)
• 6DR51.0/1/2/3				
Typical	6.6 V (= 330 Ω)	6.6 V (= 330 Ω)	-	-
Max.	6.79 V (= 340 Ω)	6.79 V (= 340 Ω)	-	-
• 6DR51.5/6				
Typical	8.75 V (= 438 Ω)	8.75 V (= 438 Ω)	8.45 V (= 423 Ω)	8.45 V (= 423 Ω)
Max.	9.3 V (= 465 Ω)	9.3 V (= 465 Ω)	9 V (= 450 Ω)	9 V (= 450 Ω)
• 6DR52..				
Typical	-	8.4 V (= 420 Ω)	8.4 V (= 420 Ω)	8.4 V (= 420 Ω)
Max.	-	9 V (= 450 Ω)	9 V (= 450 Ω)	9 V (= 450 Ω)
• 6DR53..				
Typical	7.9 V (= 395 Ω)	-	-	-
Max.	8.4 V (= 420 Ω)	-	-	-
Static destruction limit	± 40 mA	± 40 mA	-	-

	Electronics without explosion protection	Electronics with explosion protection Ex "db"	Electronics with explosion protection Ex "ia", "db ia"	Electronics with explosion protection Ex "ic", "ec", "tb"
3-/4-wire connection 6DR52.. HART 6DR53.. 4 ... 20 mA				
Load voltage at 20 mA				
• 6DR52..	-	-	≤ 1 V (= 50 Ω)	≤ 1 V (= 50 Ω)
• 6DR53..	≤ 0.2 V (= 10 Ω)	≤ 0.2 V (= 10 Ω)	-	-
Auxiliary power U_{Aux}	18 ... 35 V DC	18 ... 35 V DC	18 ... 30 V DC	18 ... 30 V DC
Current consumption I_{Aux}	(U_{Aux} - 7.5 V) / 2.4 kΩ [mA]			
Galvanic isolation	Between U_{Aux} and I_W	Between U_{Aux} and I_W	Between U_{Aux} and I_W (2 intrinsically safe circuits)	Between U_{Aux} and I_W

7.2.2 Electrical data for pressure sensor module

	Electronics without explosion protection	Electronics with explosion protection Ex "db"	Electronics with explosion protection Ex "ia", Ex "db ia"	Electronics with explosion protection Ex "ic", "ec", "tb"
Electronics for the pressure sensor module 6DR51.. -Z P01 und -Z P02 HART, non-Ex 6DR51.. -Z P01 und -Z P02 HART, Ex				
Current input I_W				
• Rated signal range	4 ... 20 mA			
• Test voltage	840 V DC, 1 s			
• Digital input DI1 (terminals 9/10; galvanically connected to basic device)	Suitable only for floating contact; max. contact load < 5 µA at 3 V			
Current to maintain the auxiliary power	≥ 3.8 mA			
Required load voltage U_B (corresponds to Ω at 20 mA)	9.4 V (= 470 Ω)	9.4 V (= 470 Ω)	9 V (= 450 Ω)	9 V (= 450 Ω)
Static destruction limit	± 30 V	± 30 V	-	-

7.2.3 Communication (HART)

HART communication	
HART version	7
PC parameter assignment software	SIMATIC PDM; supports all device objects. The software is not included in the scope of delivery.

7.3 With PROFIBUS PA / with FOUNDATION Fieldbus

7.3.1 Electrical data

Note

Pressure sensor module

The following electrical data also apply to electronics with pressure sensor module.

	Basic device without explosion protection	Basic device with explosion protection Ex "db"	Basic device with explosion protection Ex "ia", Ex "db ia"	Basic device with explosion protection Ex "ic", "ec", "tb"
Auxiliary power supply bus circuit (terminals 6 and 7)	Bus-powered			
Bus voltage	9 ... 32 V	9 ... 32 V	9 ... 24 V	9 ... 32 V
Current consumption	11.5 mA ± 10 %			
Additional fault current	0 mA			
Safety shutdown can be activated using "Jumper" (terminals 81 and 82)	Electrically isolated from bus circuit and digital input			
• Input resistance	> 20 kΩ			
• Signal status "0" (shutdown active)	0 ... 4.5 V or unused			
• Signal status "1" (shutdown not active)	13 ... 30 V			
Digital input DI1 (terminals 9 and 10) electrically connected to the bus circuit	Jumpered or connection to switch contact. Suitable only for floating contact; max. contact load < 5 µA with 3 V			
Galvanic isolation				
Test voltage	DC 840 V, 1 s			

7.3.2 PROFIBUS PA communication

Communication	Layers 1 + 2 as per PROFIBUS PA, transmission technique as per IEC 1158-2; slave function layer 7 (protocol layer) as per PROFIBUS DP, standard EN 50170 with the extended PROFIBUS functionality (all data is acyclic, manipulated variable, feedbacks and statuses are additionally cyclic)
C2 connections	Four connections with the master class 2 are supported; automatic connection termination 60 s after interruption in communication
Device profile	PROFIBUS PA profile B, version 3.0; over 150 objects
Response time for a master telegram	Typically, 10 ms
Device address	126 (in the as-delivered condition)
PC parameter assignment software	SIMATIC PDM; supports all device objects. The software is not included in the scope of delivery.

7.3.3 FOUNDATION Fieldbus communication

Communication group and class	According to the technical specification of the Fieldbus Foundation for H1 communication
Function blocks	Group 3, Class 31PS (Publisher Subscriber) 1 resource block (RB2) 1 analog output function block (AO) 1 PID function block (PID) 1 transducer block (standard advanced positioner valve)
Execution times of the blocks	AO: 60 ms PID: 80 ms
Physical layer profile	123, 511
FF registration	Tested with ITK 5.0
Device address	22 (when delivered)

7.4 Option modules

7.4.1 Digital I/O Module (DIO) 6DR4004-6A / -8A

	Without explosion protection or suitable for use in Ex "db" version	With explosion protection Ex "ia", "db ia"	With explosion protection Ex "ic", "ec", "tb"
	6DR4004-8A	**6DR4004-6A**	**6DR4004-6A**
3 digital output current circuits • Digital output A1: Terminals 41 and 42 • Digital output A2: Terminals 51 and 52 • Fault message output: Terminals 31 and 32			
• Auxiliary power supply U_{Aux}	≤ 35 V and the current consumption is to be limited to < 25 mA	-	-
• Signal status			
High (not addressed)	Conductive, R = 1 kΩ, +3/-1 % *)	≥ 2.1 mA	≥ 2.1 mA
Low *) (addressed)	Deactivated, I_R < 60 µA	≤ 1.2 mA	≤ 1.2 mA
*) The status is also Low if the basic device is faulty or without a auxiliary power.	*) When using in the flameproof enclosure, the current consumption must be restricted to 10 mA per digital output.	Switching threshold for supply according to EN 60947-5-6: U_{Aux} = 8.2 V, R_i = 1 kΩ	Switching threshold for supply according to EN 60947-5-6: U_{Aux} = 8.2 V, R_i = 1 kΩ

1 digital input current circuit • Digital input DI2: Terminals 11 and 12, terminals 21 and 22 (jumper)		
• Galvanically connected with the basic device		
Signal status 0	Floating contact, open	
Signal status 1	Floating contact, closed	
Contact load	3 V, 5 µA	
• Electrically isolated from the basic device		
Signal status 0	≤ 4.5 V or open	
Signal status 1	≥ 13 V	
Internal resistance	≥ 25 kΩ	
• Static destruction limit	± 35 V	-	-
Galvanic isolation	The three digital outputs, the DI1 digital input and the basic device are galvanically isolated from each other.		
Test voltage	DC 840 V, 1 s		

7.4.2 Analog Output Module (AOM) 6DR4004-6J / -8J

	Without explosion protection or suitable for use in Ex d version	With explosion protection Ex "ia", "db ia"	With explosion protection Ex "ic", "ec", "tb"
	6DR4004-8J	**6DR4004-6J**	**6DR4004-6J**
Direct current output for position feedback			
1 current output, terminals 61 and 62	2-wire connection		
• Rated signal range	4 ... 20 mA, short-circuit proof		
• Dynamic range	3.6 ... 20.5 mA		
• Auxiliary power supply U_{Aux}	+12 ... +35 V	+12 ... +30 V	+12 ... +30 V
• External load R_B [kΩ]	≤ (U_{Aux} [V] - 12 V)/I [mA]		
• Transmission error	≤ 0.3%		
• Temperature influence	≤ 0.1%/10 K (≤ 0.1%/18 °F)		
• Resolution	≤ 0.1%		
• Residual ripple	≤ 1 %		
Galvanic isolation	Electrically isolated from the alarm option and safely isolated from the basic device		
Test voltage	DC 840 V, 1 s		

7.4.3 Analog Input Module (AIM) 6DR4004-6F / -8F

	Without explosion protection	With explosion protection Ex "ia", "db ia", "ic"	With explosion protection Ex "ec", "tb"
	6DR4004-8F	**6DR4004-6F**	**6DR4004-6F**
The Analog Input Module (AIM) 6DR4004-6F and -8F is required to connect a Non-Contacting Sensor (NCS) or Position Transmitter 6DR4004-1ES to -4ES.			
For devices without explosion protection, other types of potentiometers with resistance values between 3 and 20 KΩ can be connected.			
Signal 20 mA			
• Rated signal range	0 ... 20 mA		-
• Internal load R_B	200 Ω		-
• Static destruction limit	40 mA		-
Signal 10 V			
• Rated signal range	0 ... 10 V		-
• Internal resistance R_i	25 kΩ		-
• Static destruction limit	20 V		-
Supply and signal power circuits	Galvanically connected with the basic device		

7.4.4 Inductive Limit Switches (ILS) 6DR4004-6G / -8G

	Without explosion protection	With explosion protection Ex "ia", "db ia"	With explosion protection Ex "ic", "ec", "tb"
	6DR4004-8G	**6DR4004-6G**	**6DR4004-6G**
Limit encoder with slotted initiators and fault message output			
2 slotted initiators • Digital output 1: Terminals 41 and 42 • Digital output 2: Terminals 51 and 52			
• Connection	2-wire technology in accordance with EN 60947-5-6 (NAMUR), for switching amplifiers connected on load side		
• Signal state High (not triggered)	> 2.1 mA		
• Signal state Low (triggered)	< 1.2 mA		
• 2 slotted initiators	Type SJ2-SN		
• Function	NC contact (NC, normally closed)		
1 fault message output • Digital output: Terminals 31 and 32			
• Connection	At switching amplifier in accordance with EN 60947-5-6: (NAMUR), U_{Aux} = 8.2 V, R_i = 1 kΩ).		
• Signal state High (not triggered)	R = 1.1 kΩ	> 2.1 mA	> 2.1 mA
• Signal state Low (triggered)	R = 10 kΩ	< 1.2 mA	< 1.2 mA
• Auxiliary power U_{Aux}	U_{Aux} ≤ DC 35 V I ≤ 20 mA	-	-
Galvanic isolation	The 3 outputs are galvanically isolated from the basic device.		
Test voltage	DC 840 V, 1 s		

7.4.5 Mechanic Limit Switches (MLS) 6DR4004-6K

	Without explosion protection	With explosion protection Ex "ia", "db ia"	With explosion protection Ex "ic", "tb"
Limit encoder with mechanical switching contacts			
2 limit contacts • Digital output DO1: Terminals 41 and 42 • Digital output DO2: Terminals 51 and 52			
• Max. switching current AC/DC	100 mA	-	-
• Max. switching voltage AC/DC	DC 30 V	DC 30 V	DC 30 V

	Without explosion protection	With explosion protection Ex "ia", "db ia"	With explosion protection Ex "ic", "tb"
1 fault message output • Digital output: Terminals 31 and 32			
• Connection	On switching amplifier according to EN 60947-5-6: (NAMUR), U_{Aux} = 8.2 V, Ri = 1 kΩ).		
• Signal state High (not triggered)	R = 1.1 kΩ	> 2.1 mA	> 2.1 mA
• Signal state Low (triggered)	R = 10 kΩ	< 1.2 mA	< 1.2 mA
• Auxiliary power	U_{Aux} ≤ DC 35 V I ≤ 20 mA	-	-
Galvanic isolation	The 3 outputs are galvanically isolated from the basic device		
Rated condition height	Max. 2 000 m above sea level. At altitudes greater than 2 000 m above sea level, use a suitable power supply.	-	-

7.4.6 Internal NCS module 6DR4004-5L / 6DR4004-5LE

Additional modules	Without explosion protection	With explosion protection Ex "ia", "db ia"	With explosion protection Ex "ic", "ec", "tb"
	6DR4004-5L	6DR4004-5LE	6DR4004-5LE
Linearity (after corrections made by positioner)	± 1 %		
Hysteresis	± 0.2 %		

7.4.7 External position detection

7.4.7.1 Rated conditions for external position detection

Rated conditions	
Ambient temperature	In hazardous areas, observe the maximum permissible ambient temperature corresponding to the temperature class.
• Permissible ambient temperature for operation	-40 ... +90 °C (-40 ... +194 °F)
Degree of protection [1)]	IP66 / Type 4X according to NEMA 250
Climate class	According to IEC/EN 60721-3
• Storage	1K23, -40 ... +90 °C (1K23, -40 ... +194 °F)

Rated conditions	
• Transport	2K12, -40 ... +90 °C (2K12, -40 ... +194 °F)
• Operation	4K26, -40 ... +90 °C (4K26, -40 ... +194 °F)

[1]) Impact energy max. 1 joule.

See also

Construction (Page 75)

7.4.7.2 External NCS sensors 6DR4004-6N / -8N

	Without explosion protection	With explosion protection Ex "ia", "db ia", "ic"	With explosion protection Ex "ec"
	6DR4004-8N	**6DR4004-6N**	**6DR4004-6N**
Travel range			
• Linear actuator 6DR4004-6/-8N.20	3 to 14 mm (0.12 to 0.55")		
• Linear actuator 6DR4004-6/-8N.30	10 to 130 mm (0.39 to 5.12"); up to 200 mm (7.87") on request		
• Part-turn actuator	30 to 100°		
Linearity (after corrections made by positioner)	± 1 %		
Hysteresis	± 0.2 %		
Temperature influence (range: rotation angle 120° or stroke 14 mm)	≤ 0.1 %/10 K (≤ 0.1 %/18 °F) for -20 to +90 °C (-4 to +194 °F) ≤ 0.2%/10 K (≤ 0.2%/18 °F) for -40 to -20 °C (-40 to -4 °F)		
Climate class	According to IEC/EN 60721-3		
• Storage	1K23, -40 ... +90 °C (-40 ... +194 °F)		
• Transport	2K12, -40 ... +90 °C (-40 ... +194 °F)		
Vibration resistance			
• Harmonic oscillations (sine) according to IEC 60068-2-6	3.5 mm (0.14"), 2 to 27 Hz, 3 cycles/axis 98.1 m/s² (321.84 ft/s²), 27 to 300 Hz, 3 cycles/axis		
• Bumping according to IEC 60068-2-29	300 m/s²(984 ft/s²), 6 ms, 4000 shocks/axis		
Torque for cable gland nut made of	Plastic	Metal	
	2.5 Nm (1.8 ft lb)	4.2 Nm (3.1 ft lb)	
Torque of hexagon socket-head screw M6x12 (shaft end or mounting bracket)	4 Nm (3 ft lb)		
Torque of hexagon socket head screw M6x25 (mounting console or mounting plate)	4 Nm (3 ft lb)		
Torque of hexagon socket head screw M3x12 (clamping ring)	1 Nm (0.7 ft lb)		
Degree of protection	IP68 according to IEC/EN 60529; Type 4X according to NEMA 250		

7.4.7.3 Position Transmitter (Potentiometer) 6DR4004-1ES

Additional modules	With explosion protection Ex "ia", "db ia", "ic"	With explosion protection Ex "ec", "tb"
Degree of protection	IP66 according to IEC/EN 60529; Type 4X according to NEMA 250	

7.4.7.4 Position Transmitter (NCS) 6DR4004-2ES

	Without explosion protection	With explosion protection Ex "ia", "db ia", "ic"	With explosion protection Ex "ec", "tb"
Travel range			
• Linear actuator	3 to 14 mm (0.12 to 0.55") 10 to 130 mm (0.39 to 5.12"); up to 200 mm (7.87") on request		
• Part-turn actuator	30 to 100°		
Linearity (after corrections made by positioner)	± 1 %		
Hysteresis	± 0.2 %		
Temperature influence (range: rotation angle 120° or stroke 14 mm)	≤ 0.1 %/10 K (≤ 0.1 %/18 °F) for -20 to +90 °C (-4 to +194 °F) ≤ 0.2%/10 K (≤ 0.2%/18 °F) for -40 to -20 °C (-40 to -4 °F)		
Climate class	According to IEC/EN 60721-3		
• Storage	1K23, -40 ... +90 °C (-40 ... +194 °F)		
• Transport	2K12, -40 ... +90 °C (-40 ... +194 °F)		
Vibration resistance			
• Harmonic oscillations (sine) according to IEC 60068-2-6	3.5 mm (0.14"), 2 to 27 Hz, 3 cycles/axis 98.1 m/s² (321.84 ft/s²), 27 to 300 Hz, 3 cycles/axis		
• Bumping according to IEC 60068-2-29	300 m/s²(984 ft/s²), 6 ms, 4000 shocks/axis		
Torque for cable gland nut made of	Plastic	Metal	
	2.5 Nm (1.8 ft lb)	4.2 Nm (3.1 ft lb)	
Torque of hexagon socket-head screw M6x12 (shaft end or mounting bracket)	4 Nm (3 ft lb)		
Torque of hexagon socket head screw M6x25 (mounting console or mounting plate)	4 Nm (3 ft lb)		
Torque of hexagon socket head screw M3x12 (clamping ring)	1 Nm (0.7 ft lb)		
Degree of protection provided by enclosure	IP66 according to IEC/EN 60529; Type 4X according to NEMA 250		

7.4.7.5 Position Transmitter (NCS, ILS) 6DR4004-3ES

	Without explosion protection	With explosion protection Ex "ia", "db ia", "ic"	With explosion protection Ex "ec", "tb"
Degree of protection provided by enclosure	IP66 according to IEC/EN 60529; Type 4X according to NEMA 250		
NCS module (NCS)	**6DR4004-5L**	**6DR4004-5LE**	**6DR4004-5LE**
Inductive Limit Switches (ILS)	**6DR4004-8G**	**6DR4004-6G**	**6DR4004-6G**
2 slotted initiators • Digital output (slot-type initiators) A1: Terminals 41 and 42 • Digital output (slot-type initiators) A2: Terminals 51 and 52			
• Connection	2-wire system according to EN 60947-5-6 (NAMUR), for switching amplifier connected on load side		
• Signal state High (not triggered)	> 2.1 mA		
• Signal state Low (triggered)	< 1.2 mA		
• 2 slotted initiators	Type SJ2-SN		
• Function	NC (normally closed)		
1 fault message output • Digital output: Terminals 31 and 32			
• Connection	At switching amplifier in accordance with EN 60947-5-6: (NAMUR), U_{Aux} = 8.2 V, R_i = 1 kΩ)		
• Signal state High (not triggered)	R = 1.1 kΩ	> 2.1 mA	> 2.1 mA
• Signal state Low (triggered)	R = 10 kΩ	< 1.2 mA	< 1.2 mA
• Auxiliary power U_{Aux}	U_{Aux} ≤ DC 35 V I ≤ 20 mA	-	-
Galvanic isolation	The 3 digital outputs are galvanically isolated from the basic unit.		
Test voltage	DC 840 V, 1 s		

7.4.7.6 Position Transmitter (NCS, MLS) 6DR4004-4ES

	Without explosion protection	With explosion protection Ex "ia", "db ia", "ic"	With explosion protection Ex "ec", "tb"
Degree of protection provided by enclosure	IP66 according to IEC/EN 60529; Type 4X according to NEMA 250		
NCS module (NCS)	**6DR4004-5L**	**6DR4004-5LE**	**6DR4004-5LE**
Mechanic Limit Switches (MLS), 6DR4004-6K			
2 limit contacts • Digital output (switching contact) A1: Terminals 41 and 42 • Digital output (switching contact) A2: Terminals 51 and 52			
• Max. switching current AC/DC	100 mA	-	-

	Without explosion protection	With explosion protection Ex "ia", "db ia", "ic"	With explosion protection Ex "ec", "tb"
• Max. switching voltage AC/DC	DC 30 V	DC 30 V	DC 30 V
1 fault message output			
• Digital output: Terminals 31 and 32			
• Connection	On switching amplifier according to EN 60947-5-6: (NAMUR), U_{Aux} = 8.2 V, Ri = 1 kΩ)		
• Signal state High (not triggered)	R = 1.1 kΩ	> 2.1 mA	> 2.1 mA
• Signal state Low (triggered)	R = 10 kΩ	< 1.2 mA	< 1.2 mA
• Auxiliary power	U_{Aux} ≤ DC 35 V I ≤ 20 mA	-	-
Galvanic isolation	The 3 digital outputs are galvanically isolated from the basic unit		
Rated condition height	Max. 2 000 m above sea level. At altitudes greater than 2 000 m above sea level, use a suitable power supply.	-	-

7.5 SITRANS AW050 Bluetooth adapter

Operating conditions and structural design	
Ambient conditions	For use indoors and outdoors.
Ambient temperature	Observe the maximum permissible ambient temperature for the field device.
• Permissible ambient temperature for operation	-40 ... +80 °C (-40 ... +176 °F)
• Relative humidity	0 ... 100%
Degree of pollution standard IEC 61010-1	2
Overvoltage category	II
Weight	60 g
Degree of protection	• Type 4X, Type 6 according to NEMA • IP66, IP68 according to IEC 60529
EMC	EN 61326
Input voltage range	2.2 ... 3.4 V DC
Maximum current consumption	2.5 mA
Material	Polycarbonate
Torque for cable gland	Corresponds to the specifications in the technical specifications in the Construction section
Communication, interface	Bluetooth 4.2
Range	Class 2; approx. 10 m depending on mounting position

See also

Construction (Page 75)

Certificates (http://www.siemens.com/processinstrumentation/certificates)

Product documentation and support

A

A.1 Product documentation

Process instrumentation product documentation is available in the following formats:

- Certificates (http://www.siemens.com/processinstrumentation/certificates)
- Downloads (firmware, EDDs, software) (http://www.siemens.com/processinstrumentation/downloads)
- Catalog and catalog sheets (http://www.siemens.com/processinstrumentation/catalogs)
- Manuals (http://www.siemens.com/processinstrumentation/documentation)
  You have the option to show, open, save, or configure the manual.
  - "Display": Open the manual in HTML5 format
  - "Configure": Register and configure the documentation specific to your plant
  - "Download": Open or save the manual in PDF format
  - "Download as html5, only PC": Open or save the manual in the HTML5 view on your PC

You can also find manuals with the Mobile app at Industry Online Support (https://support.industry.siemens.com/cs/ww/de/sc/2067). Download the app to your mobile device and scan the device QR code.

Product documentation by serial number

Using the PIA Life Cycle Portal, you can access the serial number-specific product information including technical specifications, spare parts, calibration data, or factory certificates.

Entering a serial number

1. Open the PIA Life Cycle Portal (https://www.pia-portal.automation.siemens.com).
2. Select the desired language.
3. Enter the serial number of your device. The product documentation relevant for your device is displayed and can be downloaded.

To display factory certificates, if available, log in to the PIA Life Cycle Portal using your login or register.

Scanning a QR code

1. Scan the QR code on your device with a mobile device.
2. Click "PIA Portal".

To display factory certificates, if available, log in to the PIA Life Cycle Portal using your login or register.

A.2 Technical support

Technical support

If this documentation does not completely answer your technical questions, you can enter a Support Request (http://www.siemens.com/automation/support-request).

For help creating a support request, view this video here (www.siemens.com/opensr).

Additional information on our technical support can be found at Technical Support (http://www.siemens.com/automation/csi/service).

Service & support on the Internet

In addition to our technical support, Siemens offers comprehensive online services at service & support (http://www.siemens.com/automation/serviceandsupport).

Contact

If you have further questions about the device, contact your local Siemens representative at Personal Contact (http://www.automation.siemens.com/partner).

To find the contact for your product, go to "all products and branches" and select "Products & Services > Industrial automation > Process instrumentation".

Contact address for business unit:
Siemens AG
Digital Industries
Process Automation
Östliche Rheinbrückenstr. 50
76187 Karlsruhe, Germany

Sealing plug / thread adapter

B

B.1 Intended use of accessory part

The sealing plug and the thread adapter (components) are suitable for installation in electrical equipment of flameproof enclosure "Ex db" type of protection of groups IIA, IIB and IIC as well as dust protection by enclosure "Ex tb" type of protection.

B.2 Safety information for accessory part

WARNING

Incorrect assembly

- The component can be damaged or destroyed or its functionality impaired through incorrect assembly.
  - Mount the component using a suitable tool. Refer to the information in Chapter "Technical specifications for accessory part (Page 130)", for example, torques for installation.
- For "Explosion-proof Ex d" type of protection: To ensure an engagement depth of 8 mm, the enclosure must have a wall thickness of at least 10 mm.

Improper modifications

Danger to personnel, system and environment can result from modifications and repairs of the component, particularly in hazardous areas.

- Any modification which deviates from the delivery state is not permitted.

Loss of enclosure type of protection

IP protection is not guaranteed without sealant.

- Use a suitable thread sealant.
- If you are using the component in type of protection dust protection by enclosure "Ex t", use the supplied sealing ring (①, figure in Chapter "Dimension drawings for accessory part (Page 131)").

Unsuitable fluids in the environment

Danger of injury or damage to device.

Aggressive media in the environment can damage the sealing ring. Type of protection and device protection may no longer be guaranteed.

- Make sure that the sealing material is suitable for the area of use.

Note

Loss of type of protection

Changes in the ambient conditions can loosen the component.

- As part of the recommended maintenance intervals: Check the compression fitting for tight fit and tighten, if necessary.

B.3 IECEx/ATEX

Special conditions for use

1. The sealing plug and the threaded adapter must be secured against twisting by a suitable twist-proof device.
2. The range of ambient temperature is -40 ≤ Ts ≤ +100 °C.
3. When installed in a non-metallic/non-conductive housing, conformity must be confirmed:
   – Section 7.5 of IEC 60079-0:2017/COR1:2020 for IECEx
   – Section 7.5 of EN IEC 60079-0:2018/AC:2020-02 for ATEX
4. For "Flameproof enclosure Ex d" type of protection: To ensure a screw-in depth of 8 mm, the enclosure must have a wall thickness of at least 10 mm.
5. Use a maximum of one threaded adapter per insertion.
6. A sealing plug must not be used with an adapter.
7. For installation in threaded holes, the sealing surface of the enclosure must be smooth and the threaded hole must be perpendicular to the wall.
8. Protection by enclosure "Ex t": The permissible range of ambient temperature of the AFM 30 seal is -40 °C ≤ Ts ≤ +90 °C.

B.4 Technical specifications for accessory part

Technical specifications sealing plug and thread adapter	
Sealing plug suitable for types of protection	Explosion-proof enclosure "db" of groups IIA, IIB, IIC Dust protection by enclosure "tb"
Standard compliance	The components meet Directive 2014/34/EU. They meet the requirements of standards IEC/EN 60079-0; IEC/EN 60079-1; IEC/EN 60079-31.
Explosion protection	
• Gas explosion protection	II2G Ex db IIC Gb
• Dust explosion protection	II2D Ex tb IIIC Db
Certificates	IECEx TUN 13.0022 U TÜV 13 ATEX 121710 U
Material for sealing plug / thread adapter	Stainless steel
Material for seal	AFM 30
Ambient temperature range	-40 ... +100 °C (-40 ... +212 °F) • For dust protection by enclosure "Ex t" type of protection: -40 ... +90 °C (-40 ... +194 °F)
For "Ex d" type of protection: Required wall thickness for tappings	10 mm
Torque	
• For thread size M20 x 1.5	40 Nm
• For thread size M25 x 1.5	55 Nm
• For thread size ½-14 NPT	95 Nm
Width A/F for thread size M20 x 1.5	27
Width A/F for thread size M25 x 1.5	30
Key size for thread size ½-14 NPT	10

B.5 Dimension drawings for accessory part

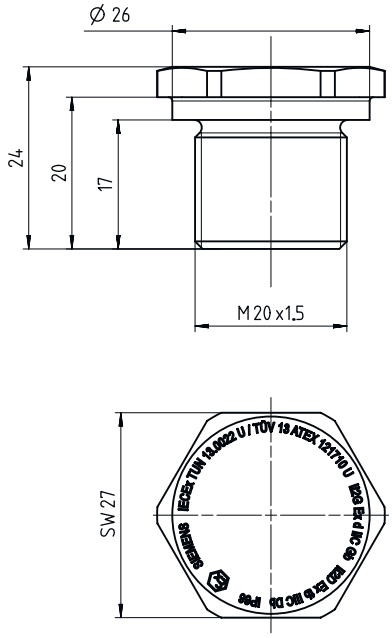

Sealing plug Ex d, M20 x 1.5, dimensions in mm

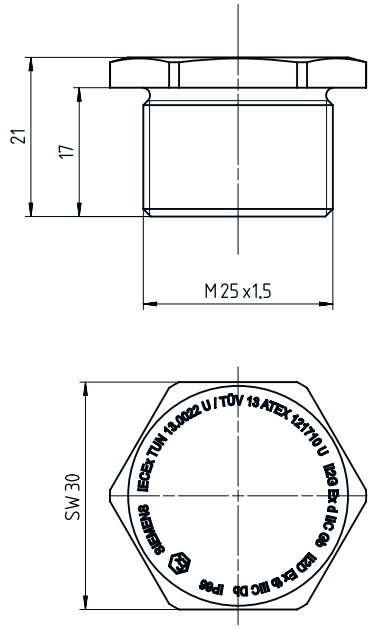

Sealing plug Ex d, M25 x 1.5, dimensions in mm

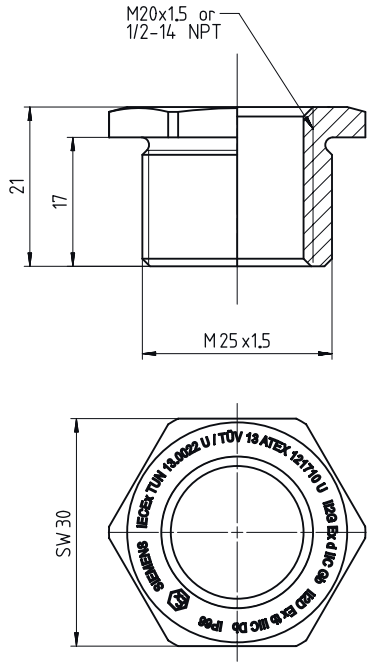

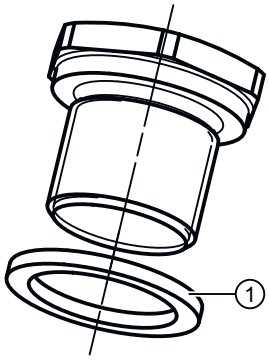

① Sealing ring: Use for dust protection "Ex t" type of protection.

Thread adapter Ex d, M25 x 1.5 on M20 x 1.5 and M25 x 1.5 on ½-14 NPT, dimensions in mm

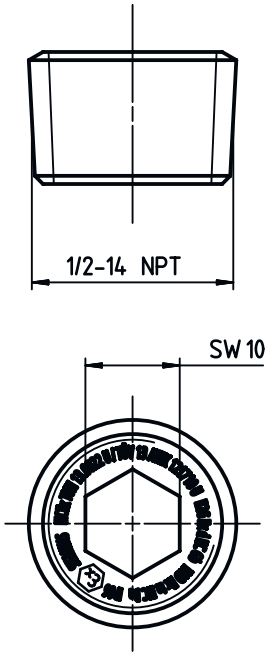

Sealing plug Ex d ½ -14 NPT

Index

A

Actuating pressure
    Figure, 47
    Position, 48
Alarm module
    see Digital I/O Module (DIO), 41
Analog Output Module (AOM), 41
Article number
    on the nameplate, 11

C

Cable gland
    Technical specifications, 76
Carrier, 57
Carrier pin, 61
Catalog
    catalog sheets, 125
Certificates, 19, 125
Cleaning, 69
Commissioning
    Automatically, 60, 64
    Cancel, 66
    Interrupting, 60
Compressed air, 26
Connecting
    Inductive Limit Switches (ILS), 42
    Pressure sensor module, 38
Connection
    Pneumatic, 47, 58
Construction
    Technical specifications, 75, 76
Customer Support, (Refer to Technical support)

D

Digital I/O Module (DIO), 41, 45
Disposal, 72
Downloads, 125

E

EMC filter module
    See Analog Input Module (AIM), 45
External position detection system
    See Position Transmitter, 45

F

Factory setting
    Reset to ~, 60, 64
Freezing
    Exhaust air outlet, 27

H

Hazardous area
    Laws and directives, 19
    Laws and directives for Korea, 19
    Qualified personnel, 23
Hotline, (Refer to Support request)

I

I/Os
    Technical specifications, 76
Inductive Limit Switches (ILS)
    Connecting, 42
Initialization
    Cancel, 66
    Interrupting, 64

L

Laws and directives, 19
Linear actuator
    Automatic commissioning, 60

M

Maintenance, 67
Manifold, 58
Manometer
    Technical specifications, 76
Manuals, 125
Material
    Technical specifications, 75
Material adapter
    Technical specifications, 124
Mechanic Limit Switches (MLS), 53, 84

Mechanical construction
Technical specifications, 124
Mechanical limit switch module
See Mechanic Limit Switches (MLS), 53, 84
Modifications
correct usage, 22, 83
improper, 22, 83

N

Natural gas, 77
Operation, 53, 84

O

Operation
Natural gas, 53, 84

P

Parameters 1 to 5
Overview, 56
Part-turn actuator
Automatic commissioning, 64
Pneumatic block
Purging air selector, 58
Pneumatic connections, 58
Position feedback module
see Analog Output Module (AOM), 41
Pressure gauge block
Torque, 76
Pressure sensor module
Connecting, 38
Purging air selector, 58

Q

Qualified personnel, 23

R

Return procedure, 71

S

Scope of delivery, 10, 78
Screen
Cleaning of~, 68
Sealing plug
Technical specifications, 130
Service, 126
Service and support
Internet, 126
SIA module
See Inductive Limit Switches (ILS), 42
Slot initiator, (See Inductive Limit Switches (ILS))
Support, 126
Support request, 126

T

Technical support, 126
partner, 126
personal contact, 126
Test certificates, 19
Threaded adapter
Technical specifications, 130
Tightening torque
Technical specifications, (Torque)
Torque, 75, 124, 130

V

Valve block, (see Pneumatic block)
Version
Technical specifications, 75

W

Warranty, 16
Weight
Technical specifications, 75